This is a digital copy of a book that was preserved for generations on library shelves before it was carefully scanned by Google as part of a project to make the world's books discoverable online.

It has survived long enough for the copyright to expire and the book to enter the public domain. A public domain book is one that was never subject to copyright or whose legal copyright term has expired. Whether a book is in the public domain may vary country to country. Public domain books are our gateways to the past, representing a wealth of history, culture and knowledge that's often difficult to discover.

Marks, notations and other marginalia present in the original volume will appear in this file - a reminder of this book's long journey from the publisher to a library and finally to you.

Usage guidelines

Google is proud to partner with libraries to digitize public domain materials and make them widely accessible. Public domain books belong to the public and we are merely their custodians. Nevertheless, this work is expensive, so in order to keep providing this resource, we have taken steps to prevent abuse by commercial parties, including placing technical restrictions on automated querying.

We also ask that you:

+ *Make non-commercial use of the files* We designed Google Book Search for use by individuals, and we request that you use these files for personal, non-commercial purposes.

+ *Refrain from automated querying* Do not send automated queries of any sort to Google's system: If you are conducting research on machine translation, optical character recognition or other areas where access to a large amount of text is helpful, please contact us. We encourage the use of public domain materials for these purposes and may be able to help.

+ *Maintain attribution* The Google "watermark" you see on each file is essential for informing people about this project and helping them find additional materials through Google Book Search. Please do not remove it.

+ *Keep it legal* Whatever your use, remember that you are responsible for ensuring that what you are doing is legal. Do not assume that just because we believe a book is in the public domain for users in the United States, that the work is also in the public domain for users in other countries. Whether a book is still in copyright varies from country to country, and we can't offer guidance on whether any specific use of any specific book is allowed. Please do not assume that a book's appearance in Google Book Search means it can be used in any manner anywhere in the world. Copyright infringement liability can be quite severe.

About Google Book Search

Google's mission is to organize the world's information and to make it universally accessible and useful. Google Book Search helps readers discover the world's books while helping authors and publishers reach new audiences. You can search through the full text of this book on the web at `http://books.google.com/`

KF 18994

~~F59~~ 24.90

HARVARD UNIVERSITY

LIBRARY OF THE

DEPARTMENT OF MINING
AND METALLURGY

'TICE

THE
THEORY AND PRACTICE
OF
ORE DRESSING

McGraw-Hill Book Company

Publishers of Books for

Electrical World
The Engineering and Mining Journal
Engineering Record
Engineering News
Railway Age Gazette
American Machinist
Signal Engineer
American Engineer
Electric Railway Journal
Coal Age
Metallurgical and Chemical Engineering
Power

THE
THEORY AND PRACTICE
OF
ORE DRESSING

BY

EDWARD S. WIARD, S. B.

MEMBER, MIN. & MET. SOC. OF AMERICA

FIRST EDITION

McGRAW-HILL BOOK COMPANY, INC.
239 WEST 39TH STREET, NEW YORK
6 BOUVERIE STREET, LONDON, E. C.
1915

2 4.9 ~~F59~~

Jan. 25, 1916
Mining + Metallurgical
Laboratory

KF 18994

HARVARD
UNIVERSITY
LIBRARY

COPYRIGHT, 1915, BY THE
McGRAW-HILL BOOK COMPANY, INC.

THE MAPLE PRESS YORK PA

To My Wife

PREFACE

In this work an attempt has been made to cover in a single volume the whole subject of ore dressing as applied at metalliferous mines in western America. The subject is treated in a manner designed to be of value and assistance to several classes of men engaged or interested in the treatment of ore by concentration processes. While the book is written largely as an aid to the mine manager or engineer in charge of mining enterprises, it is believed that the millman also will find in it much of value relating to the care of machines intrusted to his charge. It is not expected that the work will displace the hard-earned experience of the metallurgical engineer, but a man of that class will find in the book many useful and practical data. The needs of the student have not been forgotten, and a sufficient amount of theory has been introduced to give him a comprehension of some of the underlying principles of the art.

There is very little working theory in ore dressing, and what theory may be deduced is mostly explanatory of the main tendencies to which particles of ore are subjected in the different treatment processes. Unfortunately, as the art stands today, ore particles are subject to other tendencies of which no satisfactory measure can be made. There is, at present, no positive separation machine among ore-dressing devices. All the means employed to effect separation merely tend to this end. It seems possible that certain positive mechanical principles will be discovered by which each and every grain will be forced to pursue a path depending on its specific gravity although gravity may not be the guiding force. The direct application of these forces by machinery, owing to the simplicity and cheapness of this mode of effecting concentration, would seem to be the goal toward which inventors should work.

In preparing a single-volume work on ore dressing much must be omitted, due to the wealth of material from which to choose and the necessity of treating standard practice in so small a compass. Hence in the present volume stamps have received scant consideration, being machines which find little or no application in the ordinary concentrating mill. Amalgamation is not mentioned; this process being deemed outside the scope of a work on concentration which is essentially the art of enriching ores by mechanical means. The student will miss any reference to centrifugal machines or concentration by centrifugal force.

Screen ratios also receive no mention, since the proper succession of screen sizes should be determined by experimentation. An omission commonly observed in technical literature on this phase of the subject is any

reference to the influence of all the forces which enter into the breaking of the solid ore as it stands in the mine, down to a certain size. Thus mention is frequently made of "curves of roll crushing," etc., when as a matter of fact reduction in size has been performed by blasting, breaking in coarse breakers, etc., all of which factors are subject to wide variations. In ore dressing the capacity of a concentrating machine depends not alone on the tonnage, but to an equally important degree on the amount of unlocking of the ore fed to it. The determination of the number and size of machines by a crushing curve will be particularly misleading in the treatment of the larger sized gradings.

It was hoped that complete working drawings and flow sheets of a half dozen typical American mills might be inserted at the end of Chapter 5. Response to requests for material of this kind from the larger companies was very generous, but to have completely illustrated their practice would have entailed the printing of dozens of sheets of complicated drawings. Only one view, the long section of the Bunker Hill mill, was found suitable for a technical work. The small mills either had no drawings of any kind, or only those of a fragmentary character. It was hoped, also, to present some plans and flow sheets of "flotation" mills, and a large amount of material was collected; but owing to the litigation on flotation processes, this information has been furnished confidentially. For this reason the flotation process has not received the mention that its importance warrants.

I am under obligation to many: for proofreading, to Messrs. Philip Argall, Henry Eggers, H. C. Parmelee, Richard A. Parker, and to Harry W. Robinson of the Colorado Bar; for drawings and information, to Messrs. Stanly Easton of the Bunker Hill and Sullivan Mining and Concentrating Co., Carlton F. Moore, of the United States Smelting, Refining and Mining Co., The Stearns-Roger Manufacturing Co., The Minneapolis Steel Co., The Allis-Chalmers Co., The Stephens-Adamson Manufacturing Co., The Denver Engineering Works Co., The Mine and Smelter Supply Co., The Deister Concentrator Co., and others. I have drawn freely from the Report of the Canadian Zinc Commission and from Hoover's Concentration by Flotation. I am under obligation to Professor Richards as a teacher, and to his work on Ore Dressing which has undoubtedly saved me a vast amount of labor.

DENVER, COLO.
April, 1915.

CONTENTS

PREFACE vii

CHAPTER		PAGE
I.	Preliminary Considerations Relating to Installation of Ore-dressing Plants	1
II.	Testing Concentrating Ores	17
III.	Location of Mills	42
IV.	Crushing Plant	57
V.	Separating Plant	131
VI.	General Dissertation on Crushing, Heavy Crushing Machinery	163
VII.	Rolls and Medium Crushers	201
VIII.	Means for Raising Ore or Ore and Water	232
IX.	Grading and Grading Devices According to Diameter and Volume	263
X.	Separation or Concentration Proper, Coarse Separation	302
XI.	Preparation for Sand and Slime Concentration, Sand and Slime Concentration	333
XII.	Miscellaneous Processes of Sand and Slime Concentration	399

INDEX 421

THE THEORY AND PRACTICE OF ORE DRESSING

CHAPTER I

PRELIMINARY CONSIDERATIONS RELATING TO INSTALLATION OF ORE-DRESSING PLANTS

Introduction.—The purview of this work is the modes of eliminating the waste portions of metallic ores by mechanical means and without the intervention of the chemical processes of solution, combination and precipitation or the employment of high temperatures except for roasting and drying. The separation of the waste from the valuable portions of an ore involves that principle of physics based on specific gravity producing varying residual gravitational effects on particles of different specific gravity in loose masses when agitated in a fluid. Water is most commonly employed as the fluid, but air has also been successfully used and various light liquids such as gasoline and ether, have been proposed for performing some of the steps comprising the art of concentration.

Other physical principles which are employed in separation is the varying magnetic attraction, according to the nature of the material, of particles to the pole of a magnet, the repulsion of particles charged with the same sort of static electricity and the varying attraction and repulsion of particles for various light fluids.

In a few cases separation has been effected by direct screening following crushing or roasting, which causes one mineral of an ore to reduce to dust while the other remains in a comparatively coarse state. The methods employed to use the more important of these principles will be described at length in a later portion of the book.

Before a separation of the waste portion of an ore from the valuable portion can be made, it must be unlocked by crushing. The art falls into three parts crushing or unlocking, grading or preparatory, and finally separation or concentration.

The chief part of the art deals with machinery and consequently the problems of ore dressing are largely those of mechanical engineering. The success of any machine employed in the art will depend upon the discovery of correct principles, the employment of these principles in proper mechanical equivalents, and their performance in such a way as not to affect the work of other machines unfavorably. In housing ore-dressing machinery buildings

are necessary and the knowledge of the civil engineer and architect must be called upon. To consider the whole problem of the equipment of a mine with a concentrating plant, requires some knowledge of the way in which ore is deposited in the rocks, the ability to determine whether concentration is preferable as a mode of treating an ore to other ways, the proper number, kind and arrangement of the machinery necessary to effect the desired results, and the housing of these machines. Knowledge of the financial condition of a mine is also requisite to those who have in charge the question of the equipment of the concentrating plant, for no matter how adequately they may fulfill their task of providing the proper equipment, if the mining enterprise fails, owing to a lack of sufficient ore to pay for the plant, or to a lack of ore of sufficiently high grade to warrant the erection of a plant, inevitably discredit will be cast upon all who have been engaged in its design and erection.

In the following pages the *metallurgist*[1] will refer to an engineer who investigates underground conditions to determine whether conditions are favorable for the erection of a plant with the proper arrangement of machinery; who conducts tests to this end, who designs the plant and places it in operation. The term *millman* will refer to the individual who has charge of the operation of the plant after its completion.

The first question to be answered in the case of any mine is, whether it needs a plant or not. If this is decided in the affirmative, the size and kind of plant must be determined. The kind of plant will depend upon careful test work, and the mode of carrying on this test work will be discussed later.

The development of a mine usually takes place in two well-recognized ways. The original locator either has resources to develop the mine or succeeds in borrowing the money for doing this, or at some stage of its history he forms a stock company using the money secured by stock sales to further development. The other mode of development is for the locator to sell his mine or a controlling interest in it to either an individual with ample financial backing to develop the property, or a company. In the first mode of development provisions for equipment are apt to be haphazard in character, and always in jeopardy from shortness of funds. Such a mode of development means little money for carefully ascertaining technical facts. Every penny that is obtained either by stock sales or loans or from the individual's pocket is devoted to opening fresh portions of the mine. The small company has a comparatively large amount of milling ore developed. It cannot get money for further development, but can to erect a small plant to treat the ore already disclosed. Many small mills are thus prematurely installed in this mode of development because of the inability to obtain money readily. Such a plant as a rule follows the lines of other plants in the same district, and no work would be done to determine whether the usual design employed in the district is suited to the special requirements of the mine. This kind of mill

[1] A more comprehensive term would be "Metallurgical Engineer."

of course does not lead to high technical results, but it should not be decried since if it were not done in this way, it could not be done at all. Very often the locator cannot interest big capital in his mine, either because there is not sufficient ore disclosed, or because the mine does not present a favorable appearance. If the locator were discouraged by the unfavorable appearance of the mine, which he seldom is, the growth of mines throughout the world would be very much retarded.

In the other mode of development the mine will be thoroughly developed so that the size and character of the ore body will be known as well as what is the best mode of treatment, etc. Or, in other words, every effort will be made to discover the best results which can be obtained in treating the ore.

Ore Reserves.—The metallurgist should examine the mine for ore reserves and especially with an eye to the reserve of milling ore. If there be a report on the mine by a reputable mining engineer, then the metallurgist may be warranted or not in drawing conclusions from it as to whether there is sufficient ore susceptible to treatment to warrant the erection of a plant. Whether he will accept the conclusions of the reporting engineer will depend upon its completeness in answering the questions he must know. If he is not satisfied with such a report or there is no report on the mine, then an examination should be made at once. The metallurgist should bear the burden of responsibility of accepting another's findings, or if there should be none he should not accept another's unsupported dictum that the mine is ready for plant. In most mining engineers' reports there is usually some attempt at outlining the probable mode of treatment in some such form as this: so many tons of second-class reported as being available for treatment purposes of such and such an average grade and worth as a total so much. The mining engineer further states that in his belief the ore can be treated in such and such type of mill at a saving of so much per ton and at a cost of so much per ton. The cost of the plant will be so much. From such data the mining engineer estimates the net profit per ton of second-class ore mined and milled. Only two items of these estimates have been determined by actual test or sampling, and these are, the amount of ore available for treatment and the average grade. The statement made by the reporting engineer that the ore can be treated in such and such a type of mill, will often arise from the reflection that the deposit is a continuation of one already equipped with a similar plant in successful operation, or else the ore resembles one which he knows is elsewhere being successfully treated in a plant similar to the one he proposes. The estimates of cost of plant and cost of treatment per ton are obtained in analogous ways. It is not attempted here to decry such rough estimates, for if made by a good engineer they indicate to the metallurgist that there is a very good basis of fact to warrant the erection of a plant which will be commercially successful. The only way in which actual results can be made to square with estimated results, is by beginning with rough estimates and as knowledge increases, finally arriving at correct estimates of costs, profits,

etc. Very often working in this way from rude figures to more precise ones, a point will be reached where it can be decided that it would not be profitable to erect a plant. If there be a sufficient tonnage of ore to cover the cost of plant and to bear the cost of treatment recommended, and the mine shows ample indications of life beyond the period necessary to cover costs of erection, then the metallurgist may proceed to determine whether the process advocated is a proper one, and also to verify the other figures given by the mining engineer which bear upon the mill problem. The mine should be visited by the metallurgist for the purpose of making an examination or verifying the reporting engineer's conclusion, or for familiarizing himself with the facts, to be obtained by inspection of the workings underground, bearing on the mill problem.

In going through the mine for this purpose, a 100-ft. scale sample map may be found convenient. If the ore deposit be a steeply pitching one, a longitudinal section of the mine on a 20- to 50-ft. scale will be more convenient for the purposes of study than a plan; on the other hand, wide and flat lying deposits are most clearly delineated by plan maps on a small scale, one for each level. These maps should show the width and position of sample cuts and the assay value of the ore. In other words, they should be assay plans or sections on a scale convenient for carrying. If the ore appears to be of the same general average across the whole cut at any point and the cut has not been divided up into smaller cuts of waste and ore streaks, then an estimate should be made of the percentage of waste and percentage of ore of various grades. The first-class ore showing, if in any large amount, will be removed underground and shipped direct from the mine. In some mines the amount of first-class ore is so small that the engineer in making his examination gives it no consideration, reporting all the ore as second class. The amount of the first-class ore is, however, an important thing for the metallurgist to notice, for even a very small percentage will warrant providing means for removing it by hand sorting in a surface plant. Where the amount of first-class ore has been large enough to report separately, there will still be the surface sorting problem, since in nearly every case it will be impossible to remove all the first-class ore by sorting it underground. Estimates should be made of the percentage of waste and value of mineral in the second-class portion of the deposit, and the coarseness of crystallization and more or less freedom of the various minerals composing the valuable portion of the second-class ore should be noted. Such rough estimates furnish crude data as to the suitability of concentration as a mode of treatment.

If the ore occurs as plainly discernible crystals or pure masses in a matrix of gangue or worthless material and such crystals are of like or even of unlike mineral, then it is certain that concentration is a suitable mode of treatment. If such an ore, however, consisted for example of the worthless mineral iron pyrites through which gold is disseminated in a bright condition, then it is likely that treatment by amalgamation or cyanidation would be preferable to

concentration. Concentration, however, would be an available method and a thorough test would have to be made to determine which was preferable. On one hand there would be low operating costs and low plant costs with comparatively low extraction, while on the other hand there would be high operating costs and probably higher plant costs than in the case of amalgamation, and certainly so in the case of a cyanide plant, but to offset this there would be a higher percentage extraction of the gold.

Ratio of Concentration.—The question of the percentages of gangue and valuable mineral is a highly important one and is usually discussed under the term "ratio of concentration." The "ratio of concentration" is the number of tons of ore milled which, with treatment losses, will yield 1 ton of shipping product or concentrate. The whole reason for the existence of concentration is that the percentage assessment levied by the smelters on the value of an ore increases as the grade of the ore diminishes. It is cheaper to do by machinery what would have to be done by high temperature in the furnaces. An important aspect of the ratio of concentration can best be shown by two hypothetical tabulations.

(1) The pure mineral in the deposit assays $25 per ton and is mixed with parts by weight of worthless matter as follows:

Parts of Waste	2	3	4	5	6	7	8	9	10
Assay is hence in dollars per ton	8.33	6.25	5.00	4.17	3.57	3.13	2.78	2.50	2.27
Per cent. treatment loss	25	24	23	22	21	20	19	18	17
Grade of concentrate made, dollars per ton	20.00	19.00	18.00	17.00	16.50	16.00	15.50	15.00	15.00
Recovered, dollars per ton	6.25	4.75	3.85	3.25	2.82	2.50	2.25	2.05	1.88
Ratio of concentration.	3.2	4.0	4.7	5.2	5.8	6.4	6.9	7.3	8.9
Milling at $0.60 per ton	0.60	0.60	0.60	0.60	0.60	0.60	0.60	0.60	0.60
Mining at $2 per ton	2.00	2.00	2.00	2.00	2.00	2.00	2.00	2.00	2.00
Freight and treatment of concentrate at $4 per ton	1.25	1.00	0.85	0.77	0.69	.....	.....	.....	.....
Net profit per ton	2.45	1.15	0.40	minus quantities					

(2) The pure mineral in the deposits assays $50 per ton and is mixed with parts by weight of worthless matter as follows:

Parts of Waste	5	6	7	8	9	10
Assay is hence in dollars per ton	8.33	7.14	6.25	5.56	5.00	4.55
Per cent. treatment loss	22	21	20	19	18	18
Grade of concentrate made, dollars per ton	33.80	32.70	32.00	31.00	29.90	29.80
Ratio of concentration	5.2	5.8	6.4	6.9	7.3	8.0
Milling at $0.60 per ton	0.60	0.60	0.60	0.60	0.60	0.60
Milling at $2 per ton	2.00	2.00	2.00	2.00	2.00	2.00
Freight and treatment of concentrate at $4.50 per ton	0.87	0.78	0.70	0.65	0.62	0.56
Net profit per ton	3.03	2.26	1.70	1.25	0.88	0.60

The most important point brought out by this tabulation is, that in two cases with the same kind of ore and with the same assay value of the ore, the richest pure mineral may yield a profit, while the other yield none at all. The reporting engineer will see so much waste and so much mineral and at such and such a value; he may report further that this is concentrating ore which, judging from conditions obtaining in other mines in the district, would yield a profit, whereas, as has been shown by the table, such might not be the case. Now this tabulation would apply to ore where the value would increase by the addition of some valuable element to a heavy but worthless mineral; for example, gold disseminated in iron pyrites. In the first tabulation there would be $25 in gold in the iron, and in the second $50.

Another example where the comparison of the two tabulations might apply, would be where varying amounts of copper are mixed with iron and other worthless metallic elements and sulphur. In any case of this kind in order to get an exact comparison, the amounts of waste and heavy mineral with valuable element in it must be considered equal where the ratio of waste and mineral is equal. If, however, the ore of a district is quartz and galena, for example, then either one of these two tabulations would express the difference in the grade of two different mines, and ratio of concentration only would be important in the sense that a high-grade would be more profitable than a low-grade ore. The other figures shown in the table are either calculated from assumption or are assumptions based on common experience. It is assumed that the loss[1] diminishes as the grade of the ore diminishes and that it is difficult not to and certainly advisable to lower the grade of the concentrate as the grade of the ore diminishes. These two assumptions are correlated in the tabulation. The richer the ore, the more difficult it becomes to split it so that one portion is worthless and the other pure and valuable, and it must further be evident that with a rich ore, the more readily a high grade of concentrate can be made. In some mills the practice prevails of maintaining a certain grade of concentrate regardless of wide fluctuation in the ore value as it enters the mill. The loss from high tailings in this mode of operating more than offsets the advantages obtained by slightly reduced smelting rates. Where, however, the grade of ore entering the mill is maintained with fair constancy, the rates prescribed by the smelter will often enable the millman to ship a grade of concentrate which will give the highest commercial results, although this does not correspond with the best technical results. This will be discussed later.

Character of Ore.—If the valuable mineral or minerals in the ore occur like raisins in a pudding, then the probability of its being amenable to treatment by concentration is decidedly favorable. It is rare, however, to

[1] "Loss" is used here in the sense of dollars remaining in the tailing. In the first tabulation under the heading "5 parts of waste" the "percentage treatment loss" is given as "22" and in the second tabulation with 5 parts of waste the percentage loss is also 22 but in the second case, the dollars left in the tailing is much greater.

find it occurring in this way. Often the part which it is desired to save in a milling plant is so finely scattered through the gangue matter, that only the finest comminution would serve to unlock it prior to separation when the mineral would be in such a fine state of division that losses would be prohibitive. Again there will frequently be so thorough an admixture of minerals one or all of which it is of prime importance to save, that as before only the finest comminution will effect the necessary unlocking. At the Douglas mine in the Coeur d'Alene district, Idaho, there occurs a mixture of lead and zinc sulphide so intimate that it is generally regarded as a chemical combination of zinc, lead and sulphur. No feasible mode of separating the lead from the zinc has yet been proposed. Where a mixture of base sulphides such as lead, zinc and copper, and gangue constitutes the ore of a mine, the difficulties of unlocking and separating these from one another are often very great and frequently only a thorough testing will determine whether it is commercially possible to treat such ores by concentration. It should be borne in mind, however, that the methods of concentration offer the only possible solution of treating low-grade ores of this character. As improvements are made in the art it will be possible to successfully cope with more and more difficult problems of this nature.

Many ores are more valuable for the admixture of silver minerals than for the other existent heavy minerals, and as such minerals are quite soft, they will more readily be comminuted than the associated minerals in reducing the ores by crushing, and great losses will ensue in the various concentrating operations. An attempt should be made to isolate all the constituents of a typical sample of the ore and following this they should be submitted to assay to determine which of the constituents, if any, contain precious metals and in what quantity. The silver minerals will generally be found in such small quantities and so closely associated with other heavy ones as to defy separation. The form in which silver exists in many base sulphides is often an insolvable problem. There is no doubt, however, in every case where silver is present in concentrating ores, the percentage loss of this element will be greater than others of equal specific gravity. The mineral tetrahedrite is common in base metal deposits and when silver bearing will cause heavy silver losses from the ease with which it slimes. Gold when present in concentrating ores will attain a higher extraction than the base metals. In the Coeur d'Alene mines and more particularly at the mines at Wardner, Idaho, the ore is a mixture of galena and gangue containing 3 to·5 ounces of silver to the ton in the form of argentite. Argentite is a distinctly tough mineral, hence non-sliming and of about the same specific gravity as galena, yet the silver losses in the mills in this vicinity are from 5 to 10 per cent. greater than the lead. The reason for this is that a noteworthy portion of the silver is associated with the heavy gangue mineral siderite, and in the milling operations this heavy gangue mineral follows with and dilutes the material which in the earlier concentration operations is not rich enough to

ship and is too rich to waste. In the ensuing treatment of this middle-grade material by ultimate fine grinding and concentration, much of the silver is lost, making the loss of silver in the various mills of the district greater than it would have been if the vein phenomena were simpler.

Ore deposition in veins is usually more complex in the Cordilleran region than in European deposits. The commercially valuable veins abroad are often filled by a simple process denominated "crustification," successive flows of mineral-bearing matter of differing composition forming crusts on the walls until the open fissure is filled. Veins formed under these conditions are the result of slow, almost stagnant precipitation, followed by periods of rest, then renewal of deposition under altered conditions. Fig. 1, showing a section of the Drei Prinzen vein, illustrates this mode of vein formation. In the Cordilleran region the majority of the veins seem to have been formed under comparatively intense forces and a very different deposit appears; the lines of demarcation between the veins and walls are often obscure and the mode of deposition of the sulphides and other minerals so irregular as to defy exposition. The most common action in the formation of veins in the Cordilleran region is metasomatic replacement of the wall rock by vein-forming materials, these in turn being replaced by others at later epochs in the history of the vein. In metasomatic veins it is common to find the ore gradually fading out on one or both walls of the deposit. If the development work has broken the ore to the extreme mineralized limit of the vein, then the assay maps may show at some point mineral contents too lean to pay to work, but a reduction of the width of working may give a face of ore which will be profitable to mine and mill. Observation on this point should be made and also of the contrary one that the ore has not been mined to a sufficient width to include all the ore of commercial value. It may be deemed that such questions as these do not come within the province of the metallurgist, but a little reflection will show that they do. At the time of the examination of the mine by the mining engineer, metal prices may be very low or very high, and

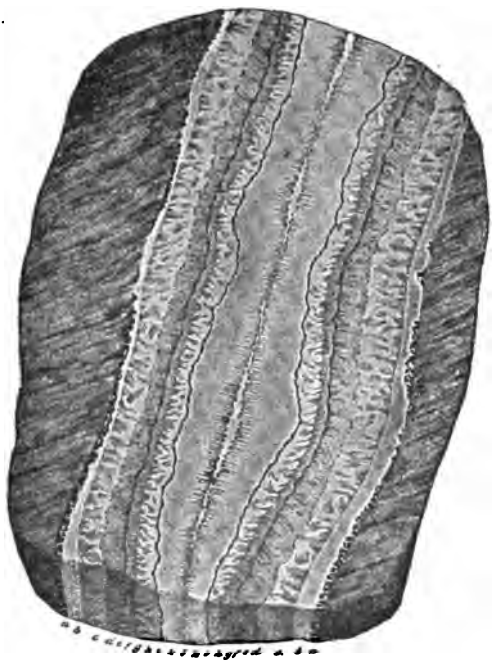

FIG. 1.—Section of the Drei Prinzen vein.

even if he bases the value of ore reserves upon what are known as normal prices which may show the ultimate profit to be derived from these reserves over a considerable term of years, there will be periods when owing to the high price of metals, portions of the deposit will be mined and sent to the mill, which in times of low prices would be allowed to stand. In milling low-grade-copper sulphides in quartzose gangues in a comparatively coarse state of crystallization, it is the universal custom after the initial coarse crushing to split the ore into a number of sizes by screens and send the coarse sizes to jigs. That which is not removed from the jigs in the form of a concentrate is further reground regardless of the low tenor in copper and the large percentage of absolutely barren matter which need not be reground, but may be eliminated by the jigs if adequate provisions to this end are made when the mill is being designed. A note should be made of conditions like these with a view to arranging the test work to this end.

The character of the gangue matter should be observed as some costly failures have been made by failure to observe this point. A finely divided galena in the heavy gangue of barite offers almost insuperable difficulties to inexpensive modes of concentration in fluids such as water and air, and in a lesser degree such common heavy gangues as siderite and rhodonite offer like difficulties. Rhodonite offers the further difficulty that it is extremely tough when massive, offering great resistance to crushing and producing excessive wear on the crushing machines. When these heavy gangue minerals are mixed with sulphides lighter than galena and of commercial value, separation by gravity is impossible.

Changing Character of Ore.—The slow changes in the character of the mineralization of an ore deposit is a matter of prime importance to the metallurgist. Where there are evidences of this kind, betterments had best be postponed until sufficient depth has been reached to assume permanence in the character of the ore. This is especially true of deposits which show gold as the principal element of value in the surface ore which upon depth becomes of little importance or disappears, the ore being then of value for its baser metals or not at all. Our western country is full of gold mills erected upon confident expectations which never materialized.

The majority of copper deposits show extraordinary changes due to a solution of the copper compounds at or near the surface and their reprecipitation in other forms in depth. In these deposits there is often a great enrichment at present or old water levels. The typical gradation of such deposits is nearly barren iron oxide at the surface, gradually increasing percentages of copper as bornite and chalcocite until the water level is reached and a decline in the proportion of these minerals with an increase of iron pyrites until ultimately the deposit becomes a commercially unworkable deposit of copper-bearing pyrites which appears to be the original mineral from which the surface and secondary ores have been derived. Occasionally the change below the water level from valuable to worthless ore is very sudden, while

frequently it is relatively slow. At the Copper King mine in the Clifton-Morenci district, Arizona, the ore consists of various copper sulphides in a quartz gangue and a zone of very rich ore was found near the surface, presumably near an old water line. Below this rich zone, ore of lower but still commercial grade and of practically no difference in tenor or appearance, has been found at a depth of over 800 ft. Practically identical conditions are found at the Coronado vein in the same district. It was supposed at one time that this vein would be of little value below the zone of rich secondary mineral, but at considerable depths this mine is still producing large quantities of good ore.

The theory regarding deposits which has been outlined is bound to affect the work of well-informed engineers, when examining copper mines. Engineers are apt to speak conservatively of the possibilities of copper mines below the zone of secondary enrichment, but if the mine workings have penetrated below this zone and disclose a good grade of commercial ore with little or no appreciable change within a few hundred feet below it, the metallurgist may proceed with confidence to the working out of the mill problem entrusted to him.

Spurr cites a very unusual case of changes in the character of a vein due to secondary deposition in the Monte Cristo district.[1] Thus to use Spurr's description:

"The upper zone is characterized by lead (galena), gold and silver, and the lower limit of galena follows the contour of the surface, some 100 to 150 ft. below it. Below this there are some less regular, but still definite, zones characterized successively by zinc (blende), copper (chalcopyrite), and iron and arsenic (arsenopyrite), and pyrite. The sulphides near the surface carry an average of 0.95 ounce gold and 12 ounces silver to the ton; at some distance (a few hundred feet) from the surface, the pyrite and arsenopyrite contain an average of 0.6 ounce gold and 7 ounces silver."

A maximum of 600 ft. is assigned for the vertical distance between the surface and the bottom of the copper zone.

Such a rapid change in the character of a deposit is very rare. It will always be wiser not to consider the concentrating plant until the actual conditions below the rich zone have been uncovered.

In addition to the changes in ore deposits effected by atmospheric agencies and of which two types have been cited, there are often slow changes in the character of ore deposits or changes which do not take place except at great depth, but as a rule the metallurgist need not take cognizance of these, leaving changes in the mill arrangement for his successors.

As examples of changes at great depth, the Coeur d'Alene, Idaho, deposits may be cited. Practically all the mines in this district show small amounts of zinc in the upper levels, but at great depth one of the mines of the district was

[1] Twenty-second Annual Report U. S. Geological Survey, Part II; also "Geology Applied to Mining" by J. E. Spurr.

compelled to close down owing to the great increase in zinc relative to lead. It seems probable in time that all the mines will ultimately encounter this problem. In the Wardner deposits in the same region no increase in the practically inappreciable quantity of zinc has been noted at a depth of 1700 ft. The Success mine in this district has been cited as an example of the conditions which will ultimately obtain in depth, the ore at this mine being almost entirely zinc blende. In the great copper deposits at Butte after the workings had penetrated below the zone of secondary enrichment, the ore of commercial grade was maintained by an increase of arsenical compounds of copper.[1] Here, if the deposits are considered in their original condition before secondary actions set in, would be a change due to gradually increasing change in the character of the minerals due to deep-seated action. (It should be noted, however, that in the case cited, the milling methods would be little or not at all affected by the change from pure sulphide ore to one containing arsenical compounds of copper, as enargite, the arsenide of copper, has a specific gravity of 4.43 to 4.45, while copper pyrites, bornite and chalcocite, have specific gravities respectively 4.1 to 4.3, 4.4 to 5.5 and 5.5 to 5.8. Copper-bearing pyrites has a specific gravity ranging from 4.83 to 5.20.

A famous and unusual change in the character of mineralization at considerable depth and due to deep-seated or primary forces is seen at the Dolcoath mine in Cornwall. Here at a depth of about 1000 ft. and within a distance of about 200 ft., the ore changes from copper to tin. In the copper zone the country rock is slate and in the lower portion of the mine granite.

Preliminary Consideration.—It having been determined that the ore of a mine is susceptible to the methods of concentration, the next work to do is to test it for determining the proper flow sheet. The flow sheet shows the kind, number and arrangement of machines for performing the concentration. This will be dealt with in the following chapter. The proper mode of concentrating the ore having been determined, the question then arises as to the size of the plant, that is, the number of tons to be treated daily. This as a rule will be fixed for the metallurgist by the financial resources of the mine. Where the mode of development is of the first kind mentioned on page 2 a mill will generally be planned for use at an early stage of development, in order to assist in bearing the expenses of mining. The size of the ore body or ore bodies has an important bearing on the size of the mill. The larger the ore body, the larger the mill. The advantage of a large plant is that reduced working costs will be obtained over those from a small plant. The advantage of an elaborate plant is the greater increase in saving due to greater refinements, but the increased cost of plant and larger operating costs may offset this extra saving. It costs less to increase the saving from 75 to 80 per cent. than it does from 80 to 85 per cent., and far less from 80 to 85 per cent. than from 85 to 90 per cent. In other words, in providing refinement resulting in greater saving, there will ultimately be reached a point

[1] Late observations at Butte indicate that much so-called secondary chalcocite is primary.

where increased saving exactly balances the extra cost necessary to obtain it, and beyond this point costs will more and more widely exceed profits. The placing of this point at a high percentage of saving in this particular case will depend on the individual skill of the metallurgist and the advance in the art of concentration at the time the mill is erected. The net ton value of the milling ore is a factor of some importance in determining the capacity of the plant. In order to illustrate the two factors of size of ore body and net value of ore entering the mill, some figures of actual practice in mining and milling are given in the tabulation, and this is followed by an analytical discussion:

Mine or District	Southern Arizona Mine	Utah Copper Co.	Bunker Hill, Idaho	Joplin, Mo.	Boulder County, Colo.
Commercial metals	Copper, silver and gold	Copper, silver and gold	Lead, silver	Zinc	Tungsten
Gross value of milling ore at normal prices for metal	$9.37	$5.60	$13.14	$5.00	$80.00
Ratio of concentration	6	30	4.5	20	5.8
Gross value of concentrate per ton, including premiums	$31.90	$84.00	$50.22	$60.00	$350.00
Cost of smelting and concentrate including penalties	$5.40	$0.85	$19.82	$23.00	.....
Cost of mining and transportation to mill	$4.25	$1.59	$3.00	$1.50	$3.00
Net value of ore	$1.83	$0.36	$3.76	$0.35	$48.61
Average daily tonnage of mills	200	6000	1500	50	100

The mine of the first column was one selling its concentrate to a local smelter. As a copper mine this ore was quite rich. The ore body was, however, quite small and a large plant was not warranted on this account. Working on a small scale the costs are high. In the case of the Utah Copper Co. conditions are at the opposite extreme.

There is a very small profit per ton, but the enormous capacity enables the management to reduce the cost of operating the mill to a small figure per ton. The ore occurs on the surface where prior to the erection of the mill it was thoroughly tested to determine the amount of ore and value per ton. Profit could only be made by a large scale of operation.

In the case of the Bunker Hill mine, having a daily capacity of 1500 tons and with larger expectations of rich ore, it would seem that a much greater daily tonnage should be milled to gain the highest economic result. On consulting the mine reports, it will be seen that the actual reserve of milling ore is not greater than for three years on a basis of 1500 tons daily. If the capacity be doubled, the reserve would last but a year and a half, and nobody expects the Bunker Hill mine to reach the end of its ore in so short a period, but conservative engineering does not care to deal with even the strongest probability. Now if it is assumed that the life of the mine ends in a year and a half, then the only advantage that will result to the stockholders from

doubling equipment, will be that they can invest the double dividend in some other form of investment a year and a half ahead of time. If 6 per cent. be allowed as a fair return for such investment, it will be found on consulting the mine report that the stockholders will be in pocket an additional amount of $123,516. But on the other hand the milling plant with possibly 10 per cent. salvage, would be a total loss, or $123,516 is gained and $188,000 lost. The Bunker Hill is one of the largest lead mines in the world, but its percentage production of lead is only a small one of the total production of the world, hence there would be no tendency for much greater output to affect the price of lead.

Every miner recognizes the fact that a certain amount of available milling ore, as disclosed by measurements, does not mean actual available ore, for in most mines this ore is not ready to stope. Again, if development is kept far ahead and a large amount of ore be disclosed suitable for milling, a great expense is added to the mine to keep it open and possibly free from water. A third factor governing capacity arises in cases like the Bunker Hill, but an important factor in any case, and that is in the advances in the art of concentration. The advance is quite rapid from year to year, and what is done today can be done much better in a few years. If the plant be not too large at the start, as the mine grows and development shows greater expectations of there being large ore bodies, new units may be added which with more improved machinery and increased technical skill, will yield better results. Taking advantage of the advances in art from time to time has been the policy of the Bunker Hill and other mining companies.

From the tabulation it would seem that the results from the Joplin field would be better if there were larger plants, but the small uncertain ore bodies do not warrant such a conclusion. The production of zinc from this district is about 60 per cent. of the total production of the United States. Practically all the ore is mined by small operators or individuals leasing from the holders of the surface rights. The metallurgical losses are heavy, and the treatment cost for the concentrate high so that a large or costly mill is not warranted. The costs of milling are low. The great losses from the crude mills of the district are frequently the subject of an unwarranted ridicule. Certain failure would attend a large operator in the district and it is only by the low wage and living cost in this field that the operators of the district can manage to exist and then only at a modest return for their exertions.

In the cost and profit column from Boulder County, Colo., a high net value for the ores is shown, but to offset this the consumption of Tungsten is limited and new applications for the use of the metal are developing slowly. During 1910[1] the production of Tungsten ore of 60 per cent. assay was but 1821 tons and the consumption 2673 tons of the same grade, there being an importation of 852 tons. Practically no ore was exported from the United States. The principal use of Tungsten is in the manufacture of incandescent lamp filaments and in making high-speed tool steel.

[1] The high year of the American industry.

From the curve Fig. 2 it will be found that a 100-ton mill (24 hours daily capacity) will cost $400 per ton; 200-ton mill, $375 per ton; 300-ton mill, $330 per ton; 400-ton mill, $313 per ton; 500-ton mill, $287 per ton; 1000-ton mill, $217 per ton, etc. These figures represent the average cost of a first-class mill with concrete foundations and steel frame, and with an elaborate flow sheet. The differences in cost can be attributed largely to differences in the machinery and structural steel centers and accessibility. Labor makes, of course, differences in the cost of erection, but as labor is usually compensated for what it is worth, the capacity-ton costs for this item do not vary very much.

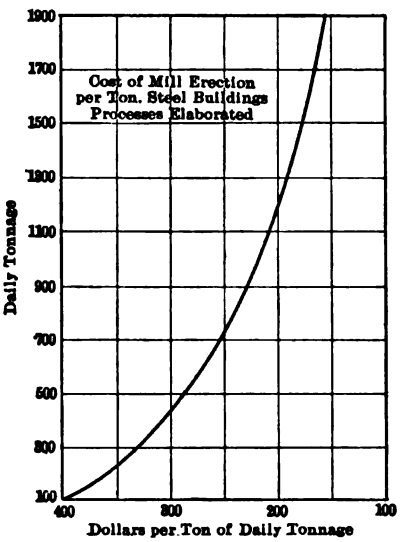

FIG. 2.

The factor of capacity of plant to size of ore bodies can be clearly understood by considering a hypothetical case. If we have a 100-ton mill and there are ore bodies which will be exhausted in five years, then the cost of the mill must be written off in this period. If provisions are made for a 200-ton mill for the same amount of ore, then the cost of the mill must be written off in two and one-half years. For a five years reserve on a 100-ton mill we may proceed as follows:

Mining and milling	$3.60 per ton
Smelting	1.00 per ton
Depreciation	0.16 per ton
Total	$4.76

Depreciation is obtained by dividing $28,756 by 356 × 100 × 5; the $28,756 is $40,000 less 10 per cent. multiplied by 0.821 the present value of $1 payable in five years with interest at 4 per cent.

If we reckon that 10 per cent. is a proper profit for mining operations, then the milling ore must average a sum which with 35 per cent. off will equal $4.76, 25 per cent. being allowed for metallurgical mill losses, or the gross value is $7.32 per ton, and there must be 182,500 tons of ore. The profit is 73 cents per ton. For a 200-ton mill the statement would be as follows:

Mining and milling	$3.40
Smelting	1.00
Depreciation	0.32
Total	$472

The profit is 77 cents per ton. The total profit on the milling operation is $133,233. If this is placed at interest for two and one-half years at 4 per cent., compounded annually, it will yield an additional $10,953 or $0.06 per ton, making a total comparison on the 200-ton basis 83 cents as against 73 cents on the 100-ton basis. To make the comparison simple, no dividends are considered to be distributed until the ore bodies are exhausted. For a 300-ton mill the following comparison may be presented:

Mining and milling	$3.30
Smelting	1.00
Depreciation	0.47
Total	$4.77

The profit per ton on $7.32 ore is $0.72. The additional gain by putting at interest the money recovered by rapid operations, amounts to an additional 9 cents per ton, making a total of $0.81.

The point to be observed from these comparisons is that while large plants reduce the operating costs, it does not do so inversely as the tonnage; that is, the greatest reduction in expenses may be expected in proceeding from small tonnages to moderately large tonnages, and as large tonnages are treated, the total costs will be less per ton, but only diminish slightly; for increased tonnage on the other hand the factor of depreciation increases in a fixed ratio. The figures of comparison are of course purely hypothetical, but the cost of mining and milling represent all charges including capital ones, and are correct for average conditions in Western America. The most favorable plant seems to be in a 200-ton mill. It will be noticed that there is available for distribution at the end of the first year under this rate of mining and milling, $83,950 or more than enough to wipe off the entire indebtedness of the mill if it be desired. The extent of workings required to furnish the ore for the mill can be gauged by assuming that the ore body is 500 ft. long by 4 ft. average width, and is opened by a single shaft with the levels 100 ft. apart; then there must be 9 levels 500 ft. long and a shaft of over 900 ft. in depth (shaft at $20 per ft. $18,000; 4500 ft. of drift at $8 per ft., and 2250 ft. of raise at $8 per ft.; total cost of drifts, winze and shaft $54,000; hoist and other equipment say $10,000; total $82,000 indebtedness against the mine prior to undertaking stoping and milling operations). Unless a mine contains high-grade ore which can be shipped to the smelter, it is probable that long before the depth is reached in the hypothetical case just discussed, the question of erecting a milling plant to afford revenue either for avoiding further borrowing or because no further loans for development can be obtained will be seriously considered. It may be stated that as a rule no mine should contemplate an equipment for a capacity of less than 100 tons per day of 24 hours. It does not pay to begin with less capacity unless the mode of treatment promises to be difficult and the small mill is to be used as a test plant to be superseded by a large one.

Custom Plants.—In the case of a custom plant the time for writing off depreciation depends upon the life of the camp it serves. The matter of the life of the camp is entirely one of good judgment upon the part of the metallurgist. In figuring the value of a custom plant for a prospective buyer, the earning power should be the sole consideration. For example, if the earning power of a custom plant is $250,000 per year and the prospective life of the camp is five years, then the value of the plant is $945,000 reckoning 8 per cent. as a good return on the investment and allowing for a sinking fund compounded annually at 4 per cent. This mode of estimating the value makes no allowance for salvage.

Salvage as Related to Plant.—A great many metallurgists consider that the money spent for a plant is a total loss; others allow a small percentage of the original cost as the amount that may be reclaimed by selling to wreckers or some mining company in the district who may wish to utilize it for treating their ores. It is impossible to predict what may be the ultimate fate of a milling plant.

The following is the estimate of returns to be obtained from selling a 200-ton steel frame concentrating building and crushing plant to wreckers. Plant situated at an isolated point.

	Per cent. cost allowed by wreckers	Dollars allowed by wreckers	Per cent. total cost allowed by wreckers
Total cost of structures erected on ground buildings, foundations, concrete, floors, bins, jigs, tanks, spouting, etc, $40,000	5	$2000	2–6/7
Heavy machinery, shafting, crushers, rolls, etc., total cost, $20,000	20	4000	5–5/7
Concentrating machinery, $6,000	40	2400	3–3/7
Motive power, electric motors, $4,000	40	1400	2
Salvage, total percentage of original expenditure			14.0

Of the first item consisting of all the structures erected at the mill site, 70 per cent. applies to the building, foundation and concrete floors which are a total loss. If one-sixth of the remainder is recouped a good bargain will have been made. The second items are worth new about $0.05 per lb. and sell for 60 per cent. of the original value when laid down at a second-hand market. The wreckers will want it for 40 per cent., less the freight, and as the freight at an isolated point to a second-hand market, such as Denver for example, is about 1 cent a pound in carload lots, they certainly will not pay more than $20 a ton for such material or 20 per cent. of the cost. The last two items, if the machinery be in first-class condition, may realize 40 per cent. of the original cost. Unless the machinery be in excellent condition and but little used, not more than 10 per cent. total salvage should be expected. It should not be overlooked also that improvements in the art may after a term of years render certain machinery useless and unsaleable.

CHAPTER II

TESTING CONCENTRATING ORES

Classification of Ore.—For the purpose of testing concentrating ores, they may be divided into seven classes according to the degree of preliminary unlocking necessary. The first test is to determine the class to which the ore belongs. The ores may be classed as follows:

(a) Ores yielding on a coarse initial break,[1] coarse concentrate and coarse tailing.

(b) Ores yielding on a coarse initial break, concentrate, tailing and a middling product.

(c) Ores yielding on a coarse initial break, coarse concentrate and coarse middling.

(d) Ores yielding on a coarse initial break, coarse tailing and middling.

(e) Ores yielding on a coarse initial break, nothing but coarse middling of an inferior grade.

(f) Ores yielding on a coarse initial break, one or more grades of middling.

(g) Ores yielding on the mine break or a coarse initial break (machine break), practically all the saleable mineral in the fines, the latter being rich enough to ship directly to the smelter.

Concentrates approximating a chemically pure composition of one or more minerals are never obtained. For example, while pure galena contains when chemically pure 86.6 per cent. lead, the average grade of concentrate from the Coeur d'Alene district is between 55 and 60 per cent. Lead concentrates from Park City, Utah, average between 25 and 30 per cent. and from Colorado camps the concentrate may be as low as 15 per cent. The reason for these differences is the more or less long haul to the smelter, differences in the cost of smelting and differences in the ores. The latter factor seems to be the governing one. If the galena occurred as coarse crystals in a soft decomposed gangue, then despite the fact that a custom smelter offering a low treatment rate exists next door to the mine, a high-grade concentrate would be shipped. Most concentrating ores fall into classes "b" and "c." Examples of class "a" ores are very rare.

The number of ores with which the metallurgist has to do are comparatively few. The principal ones are: (1) Galena ores with little or no zinc, but silver bearing if from the Cordilleran region and non-argentiferous if from the Mississippi Valley, constitute one great class. (2) Galena ores with admixture of

[1] By coarse initial break is meant crushing operations to sizes within the limit of Harz jigging.

blende and frequently a large proportion of iron pyrites constitute another. (3) Copper-bearing sulphides are a third class. (4) Native copper owing solely to the importance of this element in the Lake Superior and the practice which has arisen in that region presenting some peculiarities, give a fourth class. The pure blende-pyrite ores, the concentration of which is becoming of increasing importance, warrant a fifth class. Many rare minerals such as the tungsten minerals, silver minerals, stibnite, graphite, asbestos and rare and unusual combinations of the common metals such as wulfenite, the molybdate of lead, and the earthy compounds such as feldspar, fluorite, corundum, are susceptible to concentration. None of the last class present any particular difficulty in concentration other than that the concentrate is unusually valuable, as for example, in case of tungsten minerals. Extra refinements in treatment are necessary and commercially permissible.

Concentration is often used as an adjunct in processes for extracting gold such as amalgamation and cyanidation. If the extraction by these processes be low, concentration should precede them; especially is this true if the gold be tightly locked in relatively coarse masses of iron pyrites, as it frequently is. The cost of refining gold bullion is nothing or nominal, but the cost of smelting concentrate is often a thing the mine owner complains of as excessive. It is the metallurgist's task to determine which way will yield the highest return. If concentration precedes the other processes a higher extraction may be expected, but this may be offset by the smelting charge. If the gold ores are of the class "e" outlined at the beginning of this chapter, then of course the extraction processes might logically precede the concentrating as fine grinding or comminuting would in any case be in order before extraction or separation could be effected.

The first six classes mentioned at the beginning of this chapter present successively increasing difficulties in treatment, the ores of the first classes being easiest to treat and the last most difficult. Great vigilance should be exercised in preventing too hasty conclusions leading to designating an ore as of class "e." Much of the progress in milling in late years has arisen from the recognition of classes "d" and "f" and many beautiful and successful flow sheets have been derived from their recognition.

In milling complex ore often two kinds of concentrate must frequently be made and in a few instances a third product furnished by the separating machinery. This is the problem for example at the Western Chemical Manufacturing Company's mill at Denver where in addition to lead and zinc concentrates, an iron concentrate is removed for acid making. At Park City, Utah, the desirability of obtaining an iron concentrate comparatively high in silver as well as lead-zinc concentrate is recognized. When more than one commercially valuable constituent is to be separated from worthless gangue, the difficulties of concentration increase in proportion to the number of constituents and the closeness of the specific gravity. Ores of this kind of classes "c," "d," "e," and "f" often offer almost insuperable difficulties in

successful treatment. But ore of class "a" would offer but little more difficulty than a simple single separation.

Sampling.—In mill testing the first step is the gathering of an average sample. If the mine be shipping to a custom mill or a small mill of its own which is to be replaced by a larger, a portion of such ore may be diverted for testing. If the mine has not shipped any milling ore, the assay plan should be consulted and a number of points selected on each working level for blasting out sufficient rock to represent an average sample of the ore which will be drawn from the mine for milling purposes.

Hand Sorting.—The first question to be determined is whether ore and waste can be sorted from the milling ore. For this purpose take 20 or 30 lb. of the sample and separate all the pieces larger than 3-in. ring, wash these pieces and separate the crude ore from the gangue, dry, weigh and assay each. Screen the remainder of the sample through a 1-in. screen and wash and sort as before, following by dry weighing and assaying. The resulting figures based on the original weight and assay of ore taken will furnish a figure to determine whether sorting will pay. A good day's work for an ore sorter is discussed on page 99 *et seq.* About 20 per cent. of the day's wage should be added for maintenance of the plant. The depreciation per ton can be added if desired. If crude ore can be separated by sorting, it is almost certain that the ore belongs to class "a" or "b." It will not pay to attempt sorting below 1 in. and as a rule it does not pay to sort after crushing. The most favorable condition for sorting seems to follow the breaking of the ore to maximum pieces which are about 9 in. in diameter or thickness, this being about the usual break from mine operations. The field for hand sorting lies between coarse jigging and the rough scalping underground.

Mechanical Tests.—Tests with hand apparatus such as single compartment jigs, gold pans, vanning plaques, bateas, etc., give only qualitative information and do not furnish sufficient information for laying out the flow sheet and designing the mill. About the only information they furnish is the solution of the question in simple ores, that is, ores having only one constituent to be separated from gangue, whether or not the ore will concentrate. The maximum of extraction by a gold pan or vanning plaque can only be reached in the hand of an expert. All of this apparatus, including the single compartment jig, furnishes little or only the crudest information concerning "middling." In the case of the latter device long tedious operations must be conducted to simulate the work of a multi-compartment jig, and as the power jig is more expeditious and indicative of results to be obtained in actual milling operations, it should be employed.

Small hand apparatus tests will, if used with caution, provide us with information as to what class of ore as mentioned at the beginning of the chapter, the test sample belongs. The amount of ore to be taken for the test will depend upon whether a visual inspection determines that there is a large proportion of coarse concentrate or no; if not, the sample must be large. Take a

100-lb. sample of test ore and crush to an upper limit of 1 in., and pass this through the following battery of screens of the nearest equivalent which can be obtained, viz., 19, 12, 7, 5 and 3 mm. round holes. (This is a screen ratio of approximately 1.5.) Jig the ore and note whether any concentrate has formed. To cover the screen of a hand jig having a net area of 4 by 5 in., one layer deep, with fairly clean galena, will require that there be at least a pound of galena in the sample and about one-half as much zinc, iron or copper sulphide. Less concentrate yields than these will be satisfactory in working on a large scale especially if some middling and clean tailing can be made, or if the ore belongs to class "b." Under these conditions if the through 19 mm. on 12 mm. size shows any grains of concentrate on the screen, it will be quite safe to conclude that milling operations can begin at this upper limit. Jigging higher than this limit is best replaced by hand sorting. If the ore appears to be of classes "a" or "b" and contains two minerals to be separated from a gangue as for example lead and zinc sulphides, then if 100 lb. of ore will not provide a clean layer of lead concentrates on the hand jig screen, a sufficiently large sample should be taken which will. The tailings and all but this layer should be mixed and a second jigging operation undertaken to determine whether a shipping zinc product can be obtained. If no concentrates can be obtained from the through 19 mm. on 12 mm. size, the next smaller size should be examined to the same end and in the way just indicated, the idea being to fix the upper limit of crushing and screening.[1] If one size yields no concentrates and the next smaller a copious amount of concentrate, further tests should be conducted with other screens with openings between these limits to determine more precisely the upper limit of screening and jigging for ores of class "a" and "b."

Reference to class "d" comes in logically at this point. It may be that from none of the test sizings any concentrate will be made, but an enriched mass of ore will be found on the screen following a test even with the coarse sizes; further, if the tailings from each individual test are commercially clean, then a series of tests should be made to determine what is the best ratio of concentration for ores of this class. This had best be done on a multi-compartment jig. It will be found with most disseminated ores that the ratio of concentration is proportional to the saving. If it is assumed for the sake of clearness that there are 100 tons of 6 per cent. lead, limestone ore, all pieces of which contain more or less lead, and the individual pieces ranging in value from 13.43 per cent. to 0, then one method of concentrating such an ore would be to crush it to some low limit where all the galena would be unlocked and treat on sand and slime machinery. Now under this mode of treatment not more on an average of 75 to 80 per cent. of the lead could be saved. For simplicity in the following discussion it may be assumed that the assay value of the tailings following this procedure is 1.5 per cent. The diagram Fig. 3 shows the relation of the percentage of lead and weight of tailings to the

[1] The limit of crushing will usually be higher than the figure indicated by these tests.

percentage and weight of lead in the concentrates, the lower straight line figure representing the tailings and the upper straight line figure showing the concentrates in the same way. The relation of weights and percentages (after unlocking), would be represented more correctly by the curves shown by the dotted figures, Fig. 3. In the vertical line figure the assay of the concentrate is assumed to be 40 per cent. and that of the tailings 1–1/2 per cent. The other alternative way of concentrating the ore would be to jig for middling and regrind this product for table and slime treatment. For discussing theoretically possible savings, grades of concentrate, etc., curves of the form $x = p \cos \frac{90°y}{dN}$ or $p \cos \frac{180°y}{dN}$ for positive values of x and y are convenient for computations and afford information in keeping with fact.

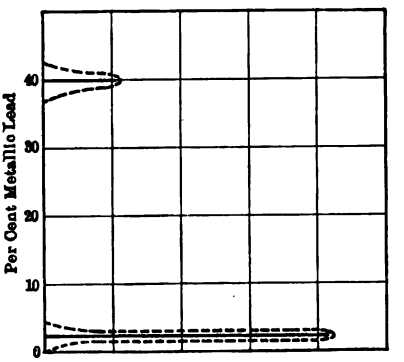

Weight
FIG. 3.

In this equation, p is a constant of percentage, being the highest percentage to which pieces in the ore attain; N is any number of weight terms or ordinates y desired; y being in arithmetical progression, and weights between these terms being assumed not to exist and x being the per cent. of metallic lead in weights y. The expression is more conveniently stated as $x = p \cos \frac{\alpha y}{d}$, α being understood to be $\frac{90°}{N}$ or $\frac{180°}{N}$. When it is desired to analyze the savings, etc., from a definite weight of ore, we may proceed as follows to obtain values of y: Equate the desired weight of ore S to the expression $\frac{N}{2}[2a + (N - 1)d]$,[1] and since y must be zero for its first value the first term a, can be placed equal to d, d being the common or arithmetical mean. The expression for S then becomes $\frac{Nd(N+1)}{2}$, and the expression for $d = \frac{2S}{N(N+1)}$. From this latter values of y may be platted, as the first ordinate is zero, the second d, the third $2d$, etc. In keeping with the weight of ore which was to be finely ground and treated on sand and slime machinery, the weight of ore will be taken in the calculations which follow as 100 tons and N is conveniently made 30 and with N as 30 the common difference is found to be 0.215. To determine the conditions for the desired assay which has been assumed in the first mode of treatment as 6 per cent., we may proceed as follows using the first formula $x = p \cos \frac{90°y}{dN}$. The sum of the weights of

[1] The common expression for the sum of a series in arithmetical progression.

lead derived by multiplying ordinates by the abcissæ, summing and dividing by 100, is equal to pd [cosα + 2cos 2α + 3cos 3α + , + .], or on summation $\frac{pd[(N+1)\cos N\alpha - N\cos(N+1)\alpha - 1]}{200\,(1-\cos\alpha)}$, which for convenience may be written $\frac{pd\,A}{B}$, and m the percentage in lead of the whole 100 tons of ore is equal to $\frac{pd\,A}{S\,B}$, and p the highest percentage to which any piece attains is equal to $\frac{S\,Bm}{d\,A}$. When N equals 30, α equals 3° S equals 100, m equals $\frac{pd(30\cos 87^\circ - 1)}{200\,(1-\cos 3^\circ)}$, and p equals $\frac{m\,200(1-\cos 3^\circ)}{d\,(30\cos 87^\circ - 1)}$. Solving for p when m equals 6, we obtain 13.43 per cent. as the highest percentage to which any piece attains.

The diagram, Fig. 4, shows the curve platted for weights of ore as ordinates, and corresponding percentages of metallic lead as abscissæ. The sum of the weights of ore equals 100 the assay of the 100 tons of ore which could be determined by multiplying each weight by the appropriate percentage and summing whereupon the weight and percentage would be found equal to six tons and 6 per cent. respectively is readily fixed by proper substitutions in the formulæ. The equations enable us to analyze any fixed conditions for a given weight of ore and its assay and the information obtained from the curve will enable us to discuss the feasibility of jigging very difficult low-grade ores before complete unlocking. The weight of metallic lead has been plotted on the diagram, the axis of abscissæ being above the cosine curve and this being marked "weight of metallic lead." The weights of lead as abscissæ are platted with weight of ore as ordinates.

With a 40-per cent. lead concentrate and 1–1/2 per cent. tailing grinding the whole 100 tons of ore to an unlocking mesh and treating on suitable separating machinery, it will be found that the percentage saving is 77.88, the ratio of concentration is 8.56, and the loss of metallic lead 1.32 tons. The very convenient formulæ[1] $r = c-t\,/f-t, E = c\,100/fr$ or $E = 100c(f-t)/f(c-t)$; where E is the saving, c the assay concentrates, f assay of heads, t assay of tailings, and r ratio of concentration, are used in these computations and will be found very valuable in many computations.

The tabulation from the information furnished by the cosine curve enables us to determine how far jigging can be carried before the loss from this opera-

[1] The derivation of these formulæ is due to Mr. Jesse Scobey. The proof is as follows: Let c, f, t and r be the values as noted above, and C, F and T the corresponding weights of materials. Then as is evident F/C is the ratio of concentration. $Ff = Cc + Tt$, but as $T = F-C$, by substitution we obtain $Ff = Cc + Ft - Ct$, or $Ff - Ft = Cc - Ct$; dividing through by $Ff - Ft$, we have $1 = C(c-t)/F(f-t)$ but $C/F = 1/r$, hence $r = c-t/f-t$ Now $E = Cc/Ff$, but since $C/F = 1/r$, E becomes $\frac{1\,c\,o\,c}{fr}$ and by substitution E becomes equal to $\frac{100c(f-t)}{f(c-t)}$.

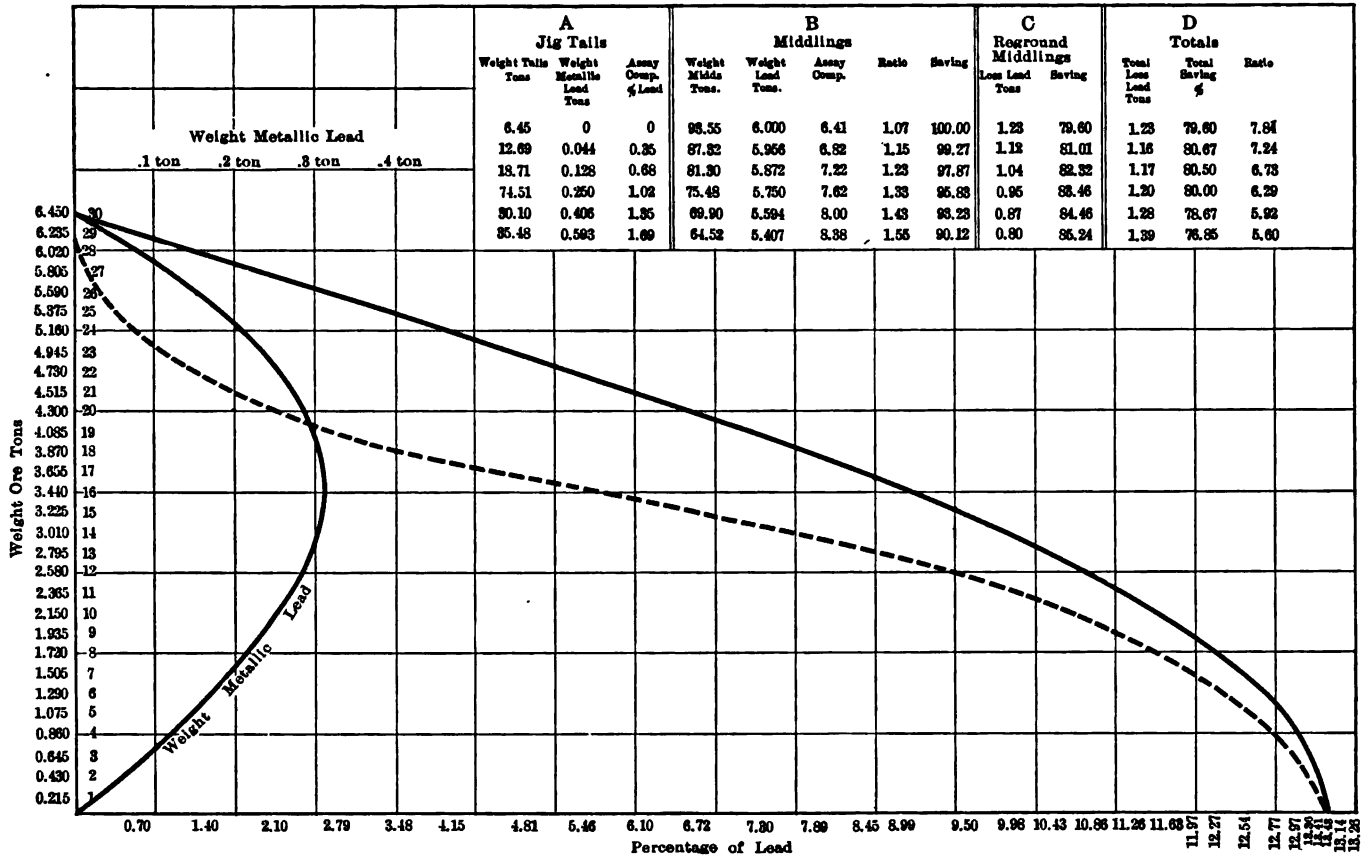

A Jig Tails			B Middlings					C Reground Middlings		D Totals		
Weight Tails Tons	Weight Metallic Lead Tons	Assay Comp. % Lead	Weight Midds Tons.	Weight Lead Tons.	Assay Comp.	Ratio	Saving	Loss Lead Tons	Saving	Total Loss Lead Tons	Total Saving %	Ratio
6.45	0	0	93.55	6.000	6.41	1.07	100.00	1.23	79.60	1.23	79.60	7.84
12.69	0.044	0.35	87.32	5.956	6.82	1.15	99.27	1.12	81.01	1.16	80.67	7.24
18.71	0.128	0.68	81.30	5.872	7.22	1.23	97.87	1.04	82.32	1.17	80.50	6.73
74.51	0.250	1.02	75.48	5.750	7.62	1.33	95.83	0.95	83.46	1.20	80.00	6.29
80.10	0.406	1.35	69.90	5.594	8.00	1.43	93.23	0.87	84.46	1.28	78.67	5.92
85.48	0.593	1.69	64.52	5.407	8.38	1.55	90.12	0.80	85.24	1.39	76.85	5.60

FIG. 4.

tion is offset by the increased saving in the sands and slime department. Column one of the tabulation shows the weight of material eliminated by jigging for the successive figures of the cumulative sum of the ordinates of the cosine curve beginning at the top and going down. If these successive weights are eliminated, then evidently the weight of middling is given by the difference between these sums and 100 as shown in column four. Columns two and three show the weight of lead in the tails and the percentage computed; 5 and 6 are similar figures for the middling; 7 is the ratio of concentration (the number of tons of original ore required to make one ton of the middling). Under section *C* the middlings are assumed to be reground and treated on sand and slime machinery with a tailings loss in each case of 1.5 per cent. lead. As the ore is completely unlocked and in the condition shown by Fig. 3, there is no reason why the limit of tailings loss cannot be reduced to 1.5 per cent. just as was assumed when the whole 100 tons of ore was ground to unlocking and treated on the proper machinery. On examining the tabulation under section *D* it will be found that the combined loss does not equal the loss from direct fine grinding and separating until between 30 and 35 tons of the original ore have been eliminated by jigging. In other words, one-third of the weight of the ore may be eliminated and yet as good a result can be obtained by direct grinding followed by suitable means of separation. This is a very important conclusion in the present state of the art.

If we were to make an analysis in a similar way of the curve $x = p \cos \frac{180°y}{dN}$ we would find that the advantage of jigging prior to complete unlocking is much more evident, the form of such a curve is indicated by the dotted one on the diagram. An inspection will show that a very much greater weight of material could be eliminated from an ore following the relations shown by a curve of this character. The curve $x = p \cos \frac{90°y}{dN}$ indicates a very bad mixture indeed. The 180-deg. cosine curve shows more normal conditions. It may be asked from what proof or argument I assume that a disseminated ore would follow the relation shown by the curves. The answer to this is common experience.

It must be evident to anyone familiar with the art that with any ore there is a rise in the bulk of metal from pieces containing the lowest percentage of metal to a high point somewhere in the neighborhood of the assay and then a falling off again as the richness of the individual pieces increases. This is clearly indicated by the weight of metallic lead curve. If there was an equal weight of ore for each per cent. platted, then the greater bulk of the metal would lie with the higher percentages, which is not in accordance with fact.

With coarse crushing and preliminary concentration for middlings under the method which has been analyzed mathematically there would be more or less percentage of sand and slime arising from the crushing which would

not be treated on jigs but on concentrating machinery suited to this kind of material. In the analysis it has been assumed that the whole 100 tons could receive a preliminary treatment on jigs. This is not strictly true, but as it

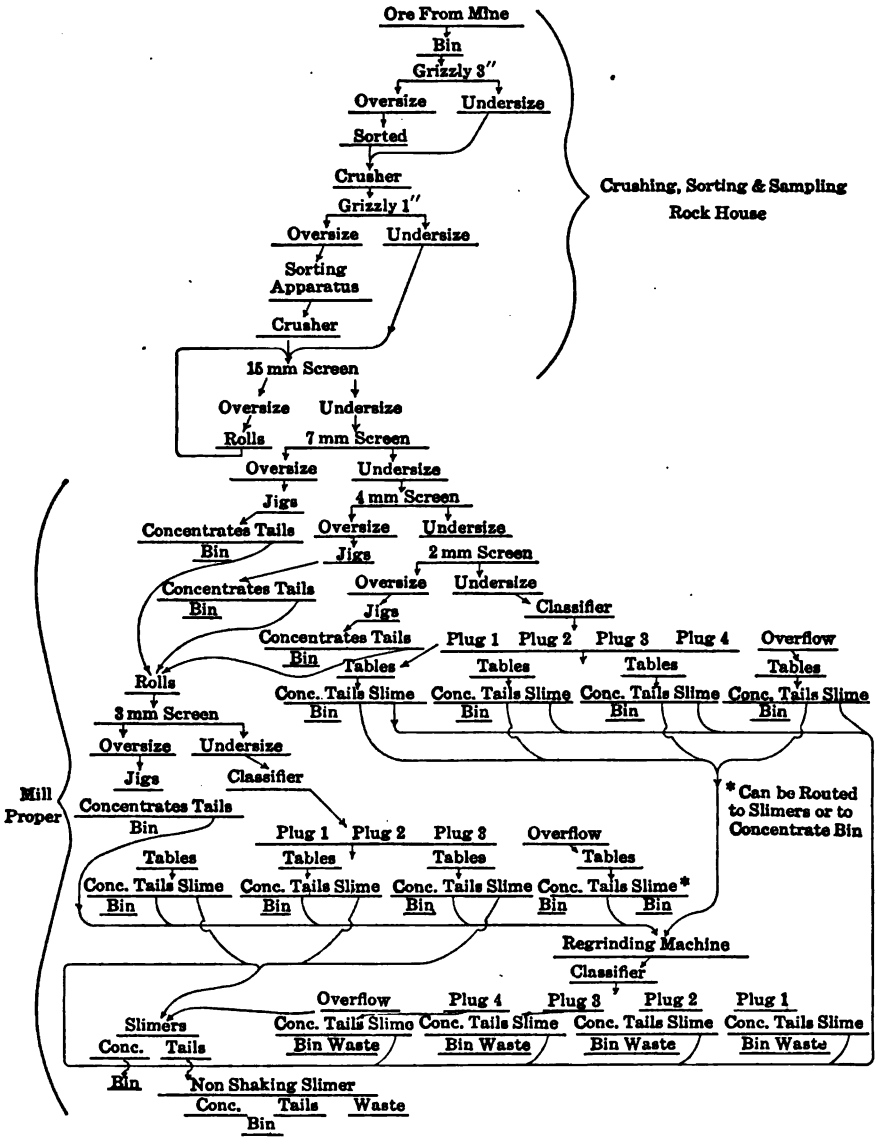

FIG. 4a.

would complicate the discussion to arrange for it, and since it presents the combination method in a more unfavorable aspect than practical working would disclose, the sand and slime made in crushing has been assumed not to exist.

roduct	Weight, tons	Assay, per cent. copper	Weight, copper, tons	Concentrates: Weight, tons	Concentrates: Assay, per cent. copper	Concentrates: Weight, copper, tons	Hutch: Weight, tons	Hutch: Assay, per cent. copper	Hutch: Weight, copper, tons	Tailings: Weight, tons	Tailings: Assay, per cent. copper	Tailings: Weight, copper, tons	All material classed as concentrate: Weight, tons	All material classed as concentrate: Assay, per cent. copper	All material classed as concentrate: Weight, copper, tons	Saving, percentage	Saving, percentage
Original ore	100.00	5.39	5.3900	.....	.....	.....	.....	.....	.....	.....	.....	.....	.....	.....	.....	.....	.....
Through 15 mm. on 7 mm. jig	46.45	4.76	2.2015	6.55	17.32	1.1344	0.29	11.35	0.0334	39.61	2.61	1.0338	6.55	17.32	1.1340	.....	.....
													0.29	11.35	0.0334		
Through 7 mm. on 4 mm. jig	21.88	4.96	1.0844	1.44	25.69	0.3599	0.13	10.79	0.0136	20.29	3.50	0.7102	1.44	25.69	0.3599	.....	.....
													0.13	10.79	0.0136		
Through 4 mm. on 2 mm. jig	16.18	5.17	0.8368	0.80	29.66	0.2373	0.08	9.20	0.0078	15.31	3.19	0.5891	0.80	29.66	0.2373	.....	.....
													0.08	9.20	0.0078		
Totals and computed per cents.	84.51	.....	4.1227	8.79	.....	1.7316	0.50	.....	0.0548	75.21	.....	2.3331	9.29	19.22	1.7852	43.31	33.12
Classifier feed	15.49	7.60	1.2709	.....	.....	.....	.....	.....	.....	.....	.....	.....	.....	.....	.....	.....	.....
Plug 1	1.01	28.53	0.2889	.....	.....	.....	.....	.....	.....	.....	.....	.....	1.01	28.53	0.2889	.....	.....
Plug 2, shaking table	4.47	6.49	0.2903	0.36	34.18	0.1217	.....	.....	.....	4.12	4.10	0.1686	0.36	34.18	0.1219	.....	.....
Plug 3, shaking table	2.98	4.73	0.1484	0.20	32.49	0.0649	.....	.....	.....	2.78	3.01	0.0835	0.20	32.49	0.0649	.....	.....
Plug 4, shaking table	4.14	6.35	0.2631	0.36	40.03	0.1435	.....	.....	.....	3.78	3.16	0.1196	0.36	40.03	0.1435	.....	.....
Overflow, shaking table	2.89	9.67	0.2798	0.27	39.93	0.1094	.....	.....	.....	1.80	5.07	0.0913	0.27	47.22	0.1094	.....	.....
									Table slime	0.82	9.85	0.0803	0.82	9.85	0.0803		
Totals and computed per cents.	15.49	.....	1.2705	1.19	.....	0.4395	.....	.....	Less slime	12.48	.....	0.4630	3.02	26.78	0.8087	63.65	46.25
Totals and computed per cents., accumulative	100.00	.....	5.3932	.....	.....	.....	.....	.....	.....	87.69	.....	2.7961	12.31	21.07	2.5939	.....	.....

Retreatment of jig tails ground to 3 mm.

Jig tails	75.21	3.10	2.3331															
On 2 mm. jig	11.12	3.15	0.3503	1.23	17.12	0.2106				9.89	1.41	0.1394	1.23	17.12	0.2106			
Plug 1 classifier, table	20.09	1.78	0.3576	1.16	13.16	0.1527				18.93	1.08	0.2044	1.16	13.16	0.1527			
Plug 2 classifier, table	12.63	3.00	0.3789	1.22	18.20	0.2220				11.41	1.38	0.1575	1.22	18.20	0.2220			
Plug 3 classifier, table	17.28	2.73	0.4717	1.54	16.44	0.2532				15.74	1.39	0.2188	1.54	19.78	0.2532			
Overflow classifier, table	14.09	5.50	0.7750	1.57	23.18	0.3629				10.41	2.54	0.2644	1.57	23.18	0.3629			
									Table slime	2.11	7.00	0.1477	2.11	7.00	0.1477			
Totals and computed per cents	75.21		2.3335	6.72		1.2014			Less slime	68.49		1.1320	8.83	15.28	1.3491	53.11	73.15	
Totals and computed per cents., accumulative										78.86			21.14	18.69	3.9430			

Second retreatment. First table tails and first retreatment tails ground to 20 mesh

Jig and table tails	78.86	1.84	1.4473															
Plug 1, shaking table	10.12	1.30	0.1316	0.70	12.22	0.0855				9.42	0.49	0.0462	0.70	12.22	0.0855			
Plug 2, shaking table	14.18	0.65	0.0922	0.19	15.18	0.0288				13.99	0.45	0.0630	0.19	15.18	0.0288			
Plug 3, shaking table	16.78	1.02	0.1712	0.62	20.00	0.1240				16.16	0.29	0.0469	0.62	20.00	0.1240			
Plug 4, shaking table	15.43	2.15	0.3317	0.78	21.13	0.1648				14.65	1.14	0.1670	0.78	21.13	0.1648			
Overflow, slimers	22.35	3.23	0.7219	1.84	19.90	0.3362				20.51	1.73	0.3548	1.84	19.90	0.3662			
Totals and computed per cents	78.86		1.4485	4.13		0.7693			Final tailings.	74.73	0.91	0.6779	4.13	18.62	0.7693	53.16		
Totals and computed per cents., accumulative										Final	concentrate		25.27	18.65	4.7123		87.43	

The main point in the discussion depends upon what is meant by tailings. Tailings may be defined as material containing a metallic content in insufficient amount to warrant the expense of further treatment. In the case under consideration the limit has been fixed at 1.5 per cent. lead. By progress in the art of concentration possibly by improved "flotation" processes the per cent. saving effected may be so much greater that a lead ore which is today of class *d* may tomorrow become of class *e*, warranting the crushing of the whole mass of the ore to a fine state of subdivision before concentrating.

Determination of Flow Sheet.—Two ways of determining the proper flow sheet for a mill can be followed. The first is by testing in custom testing works, and the second by the erection of a testing plant at the mine. The complete sheet of test figures of a copper ore of class *c* as made in a custom testing works is given in Fig. 4a.

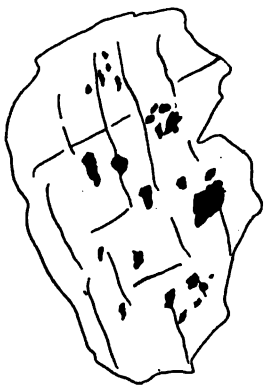

FIG. 5.

The typical appearance of this ore is shown in Fig. 5. The ore was remarkable for the almost entire absence of sulphides other than chalcocite. The mine had been opened to considerable depths but practically no change in the mineralization had been noted. The ground water level was at great depth, the mine being located in an arid region.

The first point to be noted on the sheet is the great weight of copper caught by the first jig and the high upper limit of jigging. Sorting tests were made and gave a good yield, and in practice owing to the removal of coarse rich lumps the concentrate yield from the different jigs would be more nearly even. The last two columns of the report sheet are heading "saving." The first column shows savings from groups of machines. Thus the first figure under this column is 43.31 per cent. which means that out of the total weight of metal received by these jigs, viz., 4.1227 tons copper, 1.7852 tons were extracted. The second column of percentage saving is the total cumulative saving and is based on the original weight of metal 5.39 tons of copper. The final figure in this column is 87.43, the total saving effected by the test. One point brought out by this test is the mode of conducting it. The rule that was followed was to take each product from a group of machines and either discard it as worthless, place it with the material to be classed as concentrates, or retreat it *separately*, except at the end of the test when being in the condition of slime the mixing of slime products is permissible *except the slime from the direct treatment.* The same procedure must be followed in the actual flow sheet and for reasons which will be stated in later chapters.

Regrinding.—To the metallurgist watching a test upon ore in a custom testing works, this is an important point to demand. It will be found that those in charge of these works will insist that the middling from the first jigging should be ground to some mesh guessed at and thrown in with the direct stream of ore at a point indicated by its crushed size. The whole test will be spoiled by such a procedure and the metallurgist will be at his wits end in arranging the flow sheet from the resulting figures. It is true that this procedure is often adopted in actual milling, but it is a very poor one and in the case under consideration one disadvantage resulting from it can be pointed out at once. The "table slime," the slimy water from the tables, is sufficiently rich to be at once spouted to the concentrate bin which would not be the case if the lower grade middlings were reground and thrown into the classifier feed thus lowering its grade. In the test under consideration the decision as to what point to regrind was determined by individual tests.

Portions of the middling were ground to successively finer meshes and after removing fines were jigged with the result that no appreciable concentrate was obtained until the 3-mm. size was reached. The same procedure was adopted with the second jig and the table middlings which were reground to various sizes, classified and fed to a small sand table. The final slime is the only material concerning which further treatment seems to be necessary and which was not provided for in the test. Treatment on a slime machine without shake seems to be called for at this point. In the flow sheet which is given below and based on this test, provision is made for treatment of the slime in two ways by a direct spouting to the concentrate bin and to slime machinery. This seems advisable, for the mine contained some low-grade bodies of ore which during times of high copper prices could be mined and milled to advantage.

In the flow sheet based on the test, auxiliary apparatus such as elevators, dewatering and thickening devices are not indicated. Thickening devices would have to be installed before feeding to the slimers and to the classifiers. The number and kind of machines are not indicated, the proper choice will be dealt with in later chapters. Sampling is not shown in the rock-house flow sheet though provisions for sampling as well as weighing should be made. I do not believe that there will be any difficulty in following the flow sheet as it follows closely the test work which has been done in the proper way. The work of the mill built on the strength of this and other tests lived up to the results of the test work.

The flow sheet and test sheet which have been given is typical of the test work for sulphide copper ores. In treating copper ores which are susceptible to jigging, no middlings are made above the screen, all material not removed as concentrates being reground for further treatment. Sulphide copper ores can seldom be classed as *b* ore, for while the tailings might be low in copper, they would still be too high in money value. In testing for simple

lead ores or simple zinc ores, the procedure followed in the test sheet may be adopted but with the difference that unless the ore be unusually complex, middling for regrinding may be taken from the jigs and tailings made which are low enough to send to waste. The same observation applies to the table tailings. Only testing will show what can be done in these respects. In the great porphyry copper mills the practice is tending toward the following scheme of treatment. The ore is crushed to a limiting size of about 12 mesh. It is then immediately put on shaking tables which deliver an enriched product, which after regrinding is brought up to smelter grade on a second battery of shaking tables. The other middlings from these and the roughing tables are reground and concentrated on vanners. See classification *f* at the beginning of this chapter. This procedure has enabled these mills to increase their capacity at very little cost without increasing the metal loss in the tailing. The Lake Superior copper ores are of class *c*. Some of the most striking peculiarities of the milling in this region are the employment of steam stamps for the second stage of crushing, the use of classifiers for preparing all the jig sizes as well as the sand sizes, and the use of finishing and roughing jigs. It is not probable that other copper deposits of the nature and extent of the Lake Superior region will be found, consequently the peculiarities of practice which have grown up there, and which have to a certain degree been found necessary to meet the problems presented by the character of the ores, have no application outside of the district. The mechanical equipment used in the mills of this district has as a whole no application elsewhere although many individual devices which have been developed in the region find wide application in western mining camps.

There has been recent installation of large concentrating mills in the open-pit iron mines of the Minnesota ranges where the ore to be treated consists of thin intercalated beds or layers of sandy material with hard hematite. The enriching to a shipping grade is accomplished by screening, hand sorting, followed by log washers of special design, and by shaking tables for the finest material or sands. These ores belong to class *a*. The crude ore entering the mill contains about 36 per cent. iron and the concentrate about 57 per cent. iron. The practice just stated is embodied in part from phosphate, limonite and fluorite washing and is applicable where the gangue is soft, easily pulverulent, and the concentrate of too low value per ton to warrant refinements in milling.

The above illustrations are sufficient to indicate the mode of attacking the problem of eliminating the gangue matter to the end of enriching a single mineral of commercial value. The extent to which refinements in practice can be carried will depend on the value of the ore and the reduction of working expenses to be obtained by operations on a large scale. The substances hematite, phosphate, limonite and fluospar, have gross market value of $2 to $6 per ton for standard commercial grades, while a ton of copper concentrates of 15-per cent. grade is worth gross $42 per ton when copper is 14 cents per lb.

Limit of Concentration.—The determination of how far schemes of retreatment can be carried is one susceptible of answer by careful estimation. For example, suppose we have some middling product of which we are in doubt as to whether a profit may be obtained by further treatment. How is it to be determined whether or not this material had better be thrown away or retreated? Tests will disclose the actual profit each ton of such material will yield. Now unless such material yields a good percentage return, or interest on the investment of the machinery and housing required after deducting the working costs and depreciation, the answer will be negative, and affirmative if a good profit be shown. At the proper place in later chapters the questions of cost and capacity of machinery will be sufficiently answered to enable anyone to determine the cost of equipment for himself, and with the additional aid of careful testing to answer questions of the character propounded above. So far in this chapter the determination of the proper flow sheet for a proposed mill has been discussed. It seems proper at this point to digress temporarily from this question to one concerning mills already built and in operation.

Improvements in Existing Mills.—The method of determining whether betterments are admissible, can be solved in these cases just as stated above by test and computation. This seems so evident that to many it may seem superfluous to state it, yet we find many mines where the management knows the need for betterments and have the money to make them, but do not do so. Under these circumstances the only cause which can be cited for neglecting them is the widespread belief that practical operations following and being based upon test work do not come up to the expectations raised by the latter. The main argument which is adduced is that the test work is more carefully performed than are the succeeding mill operations. Now this is really no argument whatever, but a reflection on the mill management. Anyone who has watched that work being performed in custom laboratories knows there is no essential difference between it and actual mill operation. Table, vanner and jig men or operative men of any kind have a larger number of machines to watch than the man or men who are conducting a test with a single machine. Test-mill employees have duties to perform from which the mill employee is free, such as the removal of the product-receiving receptacles, draining and drying of products, regulating feeding devices, etc. Where mill machines are doing poorer work than test ones, the reasons are the men are not properly instructed in their duties or are inattentive to them and there is lack of uniformity of conditions. These are matters for the management to remedy. Among such items may be mentioned a lack of uniformity in the flow of water due to inadequate piping and water supply; fluctuations in the speed of the machinery; variations in the grade of ore due to bad management at the mine; variations in the sizing test of the ore, owing to a worn condition of the crushing faces of the crushing and screening machinery; inadequate settlement for concentrates, etc. There are two operations usually performed

better in the test work than in actual work, and those are the screening and classification. In test work on a small scale the screening is done by hand and is 100 per cent. perfect as judged by the eye, whereas in actual milling operations the screening is often very poor. The reasons for this and the cure will be discussed at length in a later section of the book. If power-driven screens are employed in the test work, they are not driven beyond a point which gives good screening, and the same observation applies to the classifiers. In test-work classification the regulation of the proper amount of water entering the device with the ore can be readily secured. When all is said on this matter there remains no difficulty in duplicating the results obtained in the test work or bettering them, which cannot be overcome by thoughtful attention to detail, intelligent designing based on equally thorough testing, and an active experienced mill crew.

Avoid Elaborate Equipment.—Before going on to the consideration of more difficult flow sheet problems, it will be well to sound a caution against too elaborate an equipment for any given mine. This is an error which the young metallurgist is more apt to fall into than his older and more experienced brother. He is apt to follow the *ignis fatuus* of technical perfection as far as that illusive thing gives him individual light. In these commercial days the metallurgist must not figure in weights and percentages, but in dollars and cents. As an example of how metallurgical ability might be misapplied, let the problem of milling a low-grade abandoned dump be considered. In this case the imagination cannot be exercised on the probability of ore body continuing in depth with undiminished value, but there exists a certain number of tons of ore containing so little money per ton that scarcely anybody cares to take a chance on it. To the metallurgist with supposedly superior knowledge the problem is set to make money out of almost nothing. Let us assume a dump of 50,000 tons containing a little gold-bearing iron pyrites to the value of $2, the gold not being in a free milling state. The method of concentrating this material which would first suggest itself, would be to put it through crushers or stamps or other fine grinding apparatus and concentrate it on sand and slime machinery. Under these circumstances a greater recovery of the gold than 77 per cent. need not be expected. If a concentrate of $36.72 per ton is made with this recovery, the ratio of concentration is about 24, and if the smelting charges are $5 per ton including freight from the mine to the smelter, then the smelting charge per ton of ore is about $0.21. If a 100-ton mill is planned the dump will all be worked in less than two years. It may be assumed without going into the refinements of figuring on amortization that $0.80 less 20 will represent the charge against a ton of ore for the cost of the mill. ($0.80 × 50,000 = $40,000 = 400 × 100, say 20 per cent. off for salvage.) The cost of milling may be placed at $0.65 per ton which would be low for Colorado. Summing up:

Cost of mill per ton	$0.64
Cost of milling	0.65
Cost of smelting	0.21
Loss in milling	0.46
Total	$1.96
Profit per ton in proposed operation	$0.04

Naturally the client will not entertain a project requiring so large an outlay with so small a margin of profit.

On examining the dump closely the following conditions are found to exist: The gold is in a finely divided state and the pure sulphide assays about $40 per ton. Thirty per cent. of the weight of the dump is found to be in pieces of 1/2 in. diameter or smaller. But 60 per cent. of the total values are in this 30 per cent. by weight. It is concluded to treat the dump at the rate of 500 tons per day of 8 hours. The ore is passed over a grizzly with 1/2-in. spacing eliminating 350 tons assaying $1.14 per ton, and saving 150 tons which assays $4 per ton. The total gross value of the material to be milled is on the day's basis $600.

Daily expense of treatment:

Hauling 50 tons to mill with sheel scrapers at 10 cents per ton	$50.00
Labor in mill one man per day	4.00
Power at $0.50 per diem per H.P., 50 H.P.	25.00
Maintenance per diem	5.00
Freight and treatment concentrates at $5.00 per ton	41.65
	$125.65

The last item and the mode of treatment is obtained as follows: The ore passing through the grizzlies goes to two double 5-compartment jigs of the classifier jig pattern, the slime being removed at the entrance to the first compartment. Five grades of middlings are made from the top discharges of the jigs ranging from the richest at the feed end to the leanest at the tails, 22 per cent. being lost in this operation and the ratio of concentration being three into one. There will then be for the finishing operation 50 tons of slime, middlings and hutch product assaying $8.16 per ton. The coarse portion of this material is finely ground and treated with the slime on appropriate machinery with a saving of 75 per cent., the ratio of concentration being 6. The concentrates assay $36.72. The daily tonnage of concentrates shipped to the smelter is of course 50 divided by 6 or 8.33 tons and the smelting and freight charge being $5, the daily charge for smelting and freighting is $41.65 as already shown. The total saving in the mill is $0.78 \times 0.75 \times 100$ or 58.5 per cent.

The daily gross value of the mill ore is	$600.00	
58.5 per cent. of this is		351.00
Daily expense of treatment		125.65
Gross daily profit		$225.35

Total proceeds, 100 days (100 × 500 equals 50,000) $22,535 or $0.45 per ton.

The cost of the plant with second-hand machinery:

Bin and grizzlies	$800.00	
Regrinding machine	720.00	720.00
2 shaking tables	600.00	600.00
6 slime machines	1200.00	1200.00
Building and grading	1300.00	
2 jigs	700.00	
Tanks and flumes	800.00	
Engine and boiler	1500.00	1500.00
Shafting, belting, piping	100.00	
	6700.00	4200.00
Salvage, 30 per cent.		1266.00
	1266.00	
Net cost	$5436.00	

$22,535 less $5,436 is $17,109 or in round figures the profit for four months work is $17,000 or $0.34 per ton. The outlay is between $6000 and $7000, an amount on which the client will take a risk considering the profit to be derived. It will be observed that the operation proposed requires a high ultimate ratio of concentration for success, for from 500 tons of original ore 8.33 tons of concentrates have been obtained, a ratio of concentration of nearly 60. The high ratio of concentration is largely due to the heavy metallurgical loss sustained in operation. With a low ratio of concentration a larger plant would be required and a greater smelting charge per ton of milling ore would absorb all the profit. The metallurgical operations proposed are not however hypothetical, for it is nearly identical with the mode of treatment adopted by the Bunker Hill & Sullivan Company in working over its jig-tailings dump; the estimates of cost and the actual costs in the latter case are, however, very different, the plant being larger, the smelting costs different, etc.

Mixed Ores.—In the Cordilleran region there are poor milling mixtures of lead, zinc and iron sulphides with gangue. The first two must be separated from the other compounds and from themselves. As in the case of a simple ore, screening tests must be made followed by jigging tests to determine at what point one of the minerals to be saved is sufficiently unlocked to give a good concentrate. As a rule the first compartment of the jig will yield a lead concentrate containing from 8 to 12 per cent. zinc; the second may yield an iron concentrate with larger amounts of zinc; the third a zinc-iron middling; the fourth a zinc concentrate, and the last, if the jig be of five compartments, a low-grade zinc-iron mixture. This might be the arrangement with an ore

in which the zinc-lead and other minerals were quite distinctly free from one another. In other cases a little comparatively free galena might be obtained from the first compartment and all the rest yield products which would have to be reground and further treated. Under these circumstances the combinations possible in retreatment are endless and a nice exercise of judgment will be required. There will, however, be this principle to guide the metallurgist. Make on the concentrate compartment of the jigs as distinctive a product as possible and of as high an assay as is consistent with commercially clean tailings. All other products too low to send to concentrate bins or for magnetic, electrostatic or other treatment, can then be tried by tests, just as in the case of the simple ore, to determine the degree of unlocking necessary before further concentrating operations. As a rule in the case of any ore whether simple or containing two or three minerals which must be saved or separated, it will not pay to have more than two complete lines of jig treatment—one the direct and the other the middlings line. The first line should be carried out separately in all the unlocking and separating operations, no retreatment products polluting it. There remains to be considered the mode of treating the high-grade products which have been obtained in jigging. These must be ground to sand before further treatment can ensue. Zinc-iron concentrate will usually have to be roasted until the iron is in the form of magnetic sulphide, when it can be lifted by magnetic apparatus (if this method be adopted) or the iron can be repelled from the poles of an electrostatic machine. If this kind of concentrate contain appreciable amounts of galena, it will be necessary to separate either on dry or wet fine concentrating machinery, either before or after magnetic or electrostatic treatment. Treatment on wet tables is much more common than on dry. Most commonly the galena concentrate is spouted at once to the concentrate bin, but as this material often contains from 6 to 12 per cent. zinc, the mixture may pay to crush and separate. One scheme which might be followed successfully would be to crush the lead-zinc concentrate to the proper limiting size, classify carefully, and treat on tables, jigs or slime machines, the slimy waters being carefully settled and put with the lead concentrates; the overflow from the settling tanks should pass through a vacuum filter cloth where economy of floor space is necessary. By this procedure, although there is of course not complete elimination of the zinc from the lead or *vice versa*, there is no loss. The operation has the further advantage that the mill may be freed from penalties if the zinc be in excess of the usual 10 units limit, and again the grade of the lead concentrate may be so raised that the smelting charges may be reduced.

Proper Grade of Concentrate for Smelter.—Two examples of the proper grade of concentrate as dependent upon the smelter charges will be considered. One, a lead ore of the character upon which a premium is paid for a grade of concentrate above a certain percentage and a penalty prescribed when the grade of concentrate falls below a certain percentage; the other, a copper

schedule ore that is penalized for silica excess. The first case may be discussed from the data furnished by Caetani[1] for Coeur d'Alene concentrates. The basis of the contract, to use Caetani's words, is as follows:

"The smelter is going to pay for 85 per cent. of the lead at 85 per cent. of the New York quotation if the New York quotation is $4 or less per 100 lb. lead; and if the New York quotation is above $4 the smelter is going to pay for 75 per cent. of the lead at 85 per cent. of $4 plus one-third the difference between $4 and the New York quotation. The smelter will also pay for 95 per cent. of the silver at 95 per cent. of the New York quotation. The freight and treatment charge will be $10 per ton of concentrate. If the concentrate assays below 45 per cent. lead, there will be an extra charge of 10 cents for each unit of lead below 45 per cent.; if the concentrate assays above 45 per cent. there will be a bonus of 10 cents for each unit in excess."

If P equals assay concentrate in percentage lead, and V the total net value of concentrates in dollars, then $V = P/5 \times 0.7225 \times \$4 + (P - 45)0.10 - \$10$. Only the case is considered when the price of lead is $4. The return from the silver is omitted. Now let it be assumed that the normal assay of the feed is 8 per cent. lead and that we have the following relations of saving to assay of concentrate shown in columns one and two. Coeur d'Alene jig concentrates range 55–61 per cent. lead.

Saving percentage	Ratio of concentration	Smelter returns	Assay concentrate, per cent.	Profit per ton, original ore
75	10.00	$26.18	60	$2.62
76	9.71	25.50	59	2.63
77	9.42	24.82	58	2.64
78	9.13	24.15	57	2.65
79	8.86	23.47	56	2.65

An inspection of the tabulation shows that juggling the grade of the jig concentrates to obtain more premium from the smelter does not pay. If the premium were larger the advantages of raising the grading, by process of boosting all through the mill operations, might be apparent.

In Caetani's article[2] the advisability of enriching a very low-grade concentrate is fully discussed. It is mathematically proven that under the terms of a contract such as he cites, it is better to enrich the concentrates by concentrating operations even with extremely rich tailings, than to ship them without retreatment, the limit in this respect being shown. In the case of a zinc-lead mixture it must be evident that such a procedure would be profitable for there are no metallurgical losses. A smelting contract for smelting siliceous copper ores may read as follows: Copper to be paid for at 90 per cent. of electrolytic quotations less 3 per cent. for converting, refining and freighting of crude copper to the east. Silver at 90 per cent. of

[1] Mining and Scientific Press, Jan. 4, 1908.
[2] *Op. cit.*

market quotations; iron, 6 cents per unit. Penalties, insoluble 10 cents per unit in excess of 25 per cent.; fixed charge for smelting $2.50 per ton. Leaving out of consideration the question of silver, I found in the case of an ore which was to be sold under this schedule the conditions as tabulated below. The normal feed to mill contained 4 per cent. copper. Copper quoted at 14 cents per lb.

RELATION OF CONCENTRATE TO SMELTER RETURNS

Assay conct. per cent. copper	Per cent. silica	Per cent. iron	Saving, per cent.	Ratio	Smelter returns per ton concentrate	Return per ton of crude ore
10	48	15	90	2.78	$15.90	$5.72
11	43	17	89	3.09	18.50	5.99
12	39	18	88	3.41	20.94	6.14
13	35	20	87	3.74	23.44	6.27
14	32	21	85	4.07	25.78	6.33
15	30	23	85	4.41	28.08	6.37
16	29	26	84	4.76	30.31	6.37
17	28	27	83	5.10	32.48	6.37
18	27	30	82	5.59	34.74	6.23

The best result seems to be obtained when the concentrates assay in the neighborhood of 15 per cent. copper.

Advantages of Testing Plant at Mine.—The advantages to be derived from having a testing plant at the mine are that the tests can be conducted with the full rate of flowage of ore as it will be in actual milling operations; the ability to conduct as many tests under actual milling conditions as is desired, even if the testing plant is not equipped for making tests on a full scale; the cost of freighting a large number of parcels of ore will be prohibitive if the testing plant is at some distance from the mine; further, the ease with which many of the mechanical problems which will arise in actual milling operations can be solved. For many of these problems the published technical data at the disposal of the metallurgist is meager. Among such problems are the proper slope and rate of speed for the screens, the extent of dewatering required at various stages in the concentrating operations, the proper rate of feed for classifiers, the proper number of compartments for jigs, etc.

It is not necessary to make a great outlay for equipment, for one machine can be made to do the work for a whole group of machines. For example, one standard sized Harz jig can be used to test all the sizes made by the screens, and one screen frame can be made to do all the work of screening. In this case the ore is assumed to be crushed to the proper size as determined by small experiments. It will then be elevated to a screen on which has been placed the screen cloth or screen plate with holes of the proper maximum size as indicated by small tests. Below the screen will be placed a double compartment bin, the undersize being led to one compartment of the bin and the oversize to the other compartment. From this compartment the

ore can be fed by any suitable feeding device to the single jig. The compartment receiving the oversize has a gate and feeder at the bottom by which the material gathered in this compartment can be fed to an elevator which will return it to the screen mounted with the second size screen after the test with the first is completed. Below the jig may be set small bins and tanks to receive the middlings and concentrate products, the hutch products and the overflows. As these products are usually not very bulky as compared with the heads and tailings, they may after draining and drying be directly weighed and assayed. The weight and assay of the tailings can be obtained by difference. A large area of drying plate should be provided for drying samples; platform scales and other accessories should be provided. Where the product is too bulky to weigh directly but a close approximation is desired of their weight, a swinging spout may be installed which for a definite number of seconds as determined by a stop watch, is swung over a receptacle on a platform scale.

Determination of Slope for Trommel and Rate of Feed.—Determining of the proper slope and rate of feed for a trommel line will serve as an example of the mechanical data which can be obtained incidentally with the test work proper. It will be supposed the crushing machinery and elevator is in operation. Every few minutes the pivoted spout between the receiver of the elevator and the trommel is swung over a barrel mounted on a platform scale for equal intervals of time, the weight noted and the barrel emptied into the trommel after deducting any desired fraction for sizing tests. By a swinging spout between the oversize bin and the undersize bin, samples of the oversize may be taken in the same way. This procedure affords samples for computing the sizing tests of the undersize and the work of the trommel under different slopes and rates of feed. The rate of feed will have to be under control, by a feeder at the bottom of the bin provided for receiving the ore crushed to the limiting size and before it discharges into an elevator raising to the screen. When the last size of screen is put into place the results obtained in testing for the best slope and rate of feed will make possible a checking back to see if the rate offered entering the line of screens is not too great for the last one or some intermediate one. If this is the case, the rate of feed entering the line will have to be reduced by the proper amount. The mode of testing one grade of material at a time has the decided advantage of permitting the faculties of the metallurgist to concentrate on a single problem at a time.

Crushing and Sorting Tests.—In crushing the ore to limiting size, several crushers and rolls may be used if desired, though much valuable information can be obtained by crushing tests conducted on standard sized machine. Whenever possible electric power should be used for driving the testing plant as it will readily afford valuable figures on power consumption. The ore should be sampled after being crushed to limiting size by machine samplers and weighed *after* it leaves the bin holding the ore crushed to limiting size on an automatic scale. In the crushing department provisions may be made

for sorting tests if small scale tests indicate the advisability of this step. All spouts in the test mill should be broken at some point so that the flow of material may be diverted for weighing tests.

Weighing of Sample.—Where the computation of assays and weights depends upon other weights and assays, care should be taken to see that means are provided for obtaining all figures lacking. For example, the weight of material entering the jig in any test would be the weight of the feed passing to the proper screen for this test and as given by the automatic scale less the undersize from this screen as given by its passage over the scale when this material in turn is being split. Now as the computation of weight and assay of tailings depends upon the weight and assay of the hutch products, the middlings, concentrate and feed, and as we have all these but the assay of the latter, it only remains to sample the material entering the jig by an automatic sampler to obtain all the data necessary for the tailing weight and assay. The exercise of a little ingenuity will enable one to reduce the sampling and weighing devices to the smallest possible number. The middlings spouts of the jig which should be a multi-compartment one, should be arranged so that the middlings streams can either be sent to middling bins or diverted into the tailing spout.

Below the screen and jigs there should be mounted a classifier with a large number of plugs. Here I believe it will usually be best to compromise on the matter of storage and return of products. A large tonnage of material or relatively large portion of the undersize from the last screen having been collected, some of the ore discharging from certain of the plugs of the classifier can be allowed to run out to a settling pond and be gathered up and milled when actual operations begin. One or two shaking tables may be provided or competitive tests can be undertaken at this point between rival makes of shaking tables. To determine which type is preferable for any given ore the discharge from one or more plugs may be split by a revolving splitter giving each the same quantity and quality of feed. To determine the saving it will be found best to settle the tailing and concentrate from the shaking tables, the slimy tailing water being discarded, and weigh these products; the feed to the tables is diverted from time to time for weight tests after settling and drying and the assays of the feed being obtained from samples furnished by a teeter-box sampler. This will furnish enough data to calculate the weight and assay of the slimy waters from the shaking tables.

Another way of determining the efficiency of the sands machinery and especially convenient for comparing the work of two concentrating machines, is by samplers passing through the feed, tail and concentrate streams and assaying the resulting products. These little samplers may be actuated either by power or hand or the test may be conducted by hand sampling, if the metallurgist be expert in passing the sampling devices through the streams at the same rate of speed each time and at close and equal intervals of time. The saving can be calculated by the Scobey formula, page 22. If

the screen sizes for jigging have been prepared dry, and this is the better mode unless the ore is very sticky, then before the ore enters the classifiers the proper amount of water must be introduced; a safe figure being six parts by weight to one of ore. The same mode of working will apply to the introduction of the ore into the jig, water being introduced as the dry ore leaves the oversize compartment of the storage bin. If the ore is screened wet, the bin below the screen must be made water tight.

Testing Middling and Hutch Products.—Having considered the testing of the original stream of ore, it remains now to consider the treatment of the middling products, hutch products, etc., from the jigging operations. These will have to be cleaned up following each jig test, provided small scale tests indicate that crushing to a jig size will yield a concentrate return, if not, the middling must be ground to sand size or finer, classified and concentrated by the modes already indicated. At this point tests on comminuting machines may be conducted provided future operations are to be on a large scale. In addition to the apparatus mentioned as necessary, the test plant should have a complete equipment of small machines, little power jigs, bench shaking tables, panning devices, a good microscope, and complete apparatus for preparing assay samples. If the ore to be tested be blendiferous, apparatus for making flotation, magnetic and electrostatic tests will have to be provided.

If the ores are of class *c* a jig of the Hancock type should be installed in the test mill for competitive tests with Harz jigs. If a large tonnage is to be treated in the mill which arises from the test work it is almost certain with this class that the Hancock jig will yield better commercial results. An easy ore of class *d*, one in which the amount of disseminated ore is small will possibly give better commercial results with Hancock jigs than Harz, particularly if the tonnage to be treated is large.

Tests in Operating Mills.—The metallurgist is frequently called upon to prepare hastily a sheet showing the saving in the different departments of the mill already in operation, as well as the total saving from the whole mill. If the ore is machine sampled, before entering the mill, a definite lot of crude ore is weighed into a clean bin after sampling for assay, and on weighing and assaying the concentrates, data will be obtained for accurately determining the whole saving.

If there is no mechanical sampler, then hand sampling must be resorted to. The ore should be sampled at frequent equal intervals of time. Pass the sampling device through the feed stream in both directions, taking care that the motion through the center of the stream is not faster than at the sides, and endeavor to perform the motions of sampling at the same rate of speed for every cut made. The ore should of course be accurately weighed and a moisture sample taken during this operation. The ore should be sampled in as fine a state of division as possible. Having obtained the figure for the whole saving of the mill, we are prepared to attack the question of the different savings. A flow sheet of the mill is indispensable to this end.

On this can be marked the points where weight and assay samples must be taken. A little study will fix the best points and a little ingenuity will afford sufficiently good means of securing samples which will yield figures of approximate correctness. For taking samples in inclined launders, a section of the side should be removed making cuts as deep down as the launder liners will permit. If the side of the launder is lined, a section of the lining must be removed. For streams of finely divided ore or ore and water which only fill a limited depth of the launder a cut to the top of the stream will suffice. The section of the launder removed should be mounted with buttons so that it may be kept in place while not taking samples to prevent undue leakage. The top of the launder should be covered at the sampling point with a piece of board to prevent the ore and water from pouring over the top while taking a sample. To take a weight or assay sample the removable section is removed and a wad of burlap thrust down in the stream until all of it is diverted through the opening in the side of the launder. When the right-angled flow has become steady, a receptacle to catch it may be introduced below and kept in place for a definite number of seconds. *Caution:* do not end sample-taking period by pulling out burlap before removing receptacle; the latter must be put under and taken away from the stream while flowing its full strength. The individuals taking the samples should have a report board and sheet of ruled paper nailed up at their stations for making record of the time of taking samples and the duration of flow. Stop watches should be snapped firmly but sharply. The party handling the watch should have nothing to do with removing the receptacles. Jig tailing samples may be caught by introducing a hinged board covering the vertical spout at the tailing end of the jig, removing the front board of this spout and securing in its place a pointed spout from the point of which the sample will drop into the proper receptacle. Two containers are required at each sample station, one for taking the sample and the other for holding it. A small galvanized wash tub will very frequently answer for the first purpose, and a liquor barrel for the second. Both of these articles are usually readily obtainable in mining camps. For drying samples galvanized tubs and a good cook stove give a good combination and one always obtainable.

CHAPTER III

LOCATION OF MILLS

It will be best to locate the mill at the base of the hills in which the mine is situated and on a main line or branch of a railroad or within easy reach of a railroad by a branch line. The reasons why such a location is preferable are: (1) The greater certainty in the water supply. At high points in the mountains the water supply at certain seasons becomes much lower than at others and in arid regions fails entirely. Descending from the high points in the mountains to the master streams of a district, the supply of water increases from a minimum which will often just yield sufficient water for washing purposes to a minimum which will yield additionally sufficient power to run a whole or portion of the mill by water power or hydroelectric power. (2) The cost of erecting the mill at the lower point will be less as the equipment does not have to go up heavy-grade mountain roads at a great cost for haulage and the regular operating supplies can more cheaply be brought to the mill. The strategic value of the lower site is especially evident if a group of mines is to be served by one milling plant. It is evident that if the vein or veins will be encountered at great depth by a more or less long crosscut, then the proper position for the mill is below the portal of such a crosscut, and this is even more evident when a number of mines at different levels are to be served the mill must at least be at the level of the lowest mine if only not to violate the principle of mountain transportation that the loads must go down hill and the empties up hill. Again at a lower level a more favorable and roomy site is apt to be found for the mill buildings and to take care of their future growth. In snowslide areas the more open flatter ground is a greater guarantee against this evil. It should be noted on this point, however, that in such great mountain complexes as are to be found in the San Juan region of Colorado, the metallurgist may have to go often a great distance from the mine before finding an entirely satisfactory mill site. In this region mills are often located in peril of slides and under other disadvantageous conditions not through the ignorance of the management, but because there is no other choice. If the tailing discharge into small perennial streams near the head of the mountains, there is greater danger of this débris blocking the flow than would be the case if it were discharged into the larger streams, and as will be shown later, the mill owner is liable for any damage ensuing. If the mill is placed in the upper part of the mountains in a district having mills in lower portions, then there will be great difficulty in obtaining the best labor for the most skilful and steady labor will be found in the mills in the bottoms and

near the large towns, enabling men with families to live with more advantages and fewer hardships.

As against the advantages named there must be placed the greater cost of transporting ore to the mill on the railroad than of transporting concentrate to the same place. An average cost for transporting ore or concentrate by wagon in western camps and for a haul of 1 to 2 miles, is about $2 per ton. If it is assumed that the average ratio of concentration is about six, then the cost of transportation of concentrates per ton of ore milled is 33 cents. A mine of any size would not, however, consider so costly a mode of transportation as by wagon. The cost of aerial tramming need not exceed 15 cents per ton for a 2-mile haul and the relative costs per ton of concentrate are respectively with this mode of transportation 3 cents and 25 cents. The difference is not great enough to offset the other advantages which have been given.

EXAMPLES OF OPERATING COSTS OF TRAMWAY TRANSPORTATION PER TON

Span	Cost cents	Span	Cost cents	Span	Cost cents	Span	Cost cents
1300 ft.	2.7	14,000 ft.	9	10,560 ft.	10	1224 ft.	9

The figure of 15 cents includes the construction cost per ton. The cost of aerial trams may be taken at about $15,000, while the cost of standard gauge railroad from the mine may run up to $20,000 or $30,000 per mile or more. A 5-mile railroad haul on steep mountain grades and with sharp curves may be equal to only 1 to 2 miles of aerial tram which proceeds in straight lines across the mountains. The great disadvantages of the aerial tram are its liability to sudden and unexpected breakage of the supporting ropes, or a car becoming loose on the inclined portions of a span and carrying everything before it in a mad descent to the lowest portion of the span. Aerial trams have but a limited capacity and when this is exceeded all that remains to do, if further capacity is desired from this mode of transportation, is to parallel the first line by a second. A large capacity can only be obtained at great expense. In many precipitous regions it is the only feasible mode of transportation. A young mine can seldom be burdened with expensive transportation means and must be content with high ton costs in transportation until such time as the development of the ore bodies warrants large expenditures.

The obtaining of a suitable mill site in the lower reaches in western mining regions is not always an easy matter. The bottom lands have frequently been preempted by hybrid individuals who are neither miners, prospectors, farmers or stock raisers, but a little of each. At certain seasons of the year they will be found working underground; at others they will be found in the hills prospecting, and in favorable times they may do a little gardening or stock raising.

If a mining company desires the land of such an individual, they may reckon paying ten times its value as agricultural land. In addition to men

of this character, there are others around mining camps who live by their wits and will preempt any ground on hearing the smallest rumor that it can be made use of by others. Many readers of this work have probably had the experience of finding ground appropriate for surface plant freshly located when they went to preempt it. The path of late comers to mining camps projecting mining enterprises is not strewn with roses. Water rights of any value or the most worthless will be found in the possession of others, and like other free natural resources must be well paid for if needed.

Water Rights.—In preempting water the common law recognizes no absolute right of appropriation when taken for useful or beneficial purposes. Under this view the owner of land through which water flows or which is bounded by flowing water, has a right to demand that the water continue to flow undiminished in quantity and unimpaired in quality whether he derives any benefit from its flowing or not.

This conception of riparian right has never had much force in the western states. The Federal government where it has had jurisdiction of both streams and lands has always silently acquiesced in a preemption of water, provided the water was taken in such a way that others could also have the benefit of it. Junior locators must respect the right of seniors. In some western states as California, Oregon and Washington, which are more strictly agricultural than mining states, the courts have laid down the principle that where the government sells land having running water on it, the common law doctrine of riparian rights will prevail and will prevent any appropriation by one entering a region after such a purchaser of land. The common law conception in this may be stated as follows: If one is situated at such a distance above a land owner on a stream that he may take and use the water and return it to the latter undiminished in quantity and unaffected as to quality, then he need not consult such land owner in the use of it. But if he has to carry the water over the land of such owner or over other land, and in either case depriving him of the use of a portion or all of it, then he must obtain the right to do this from such land owner. In Nevada and Colorado, which are distinctly mining states, such a view is not held unless the land owner has separately preempted the water. Thus the Supreme Court of Colorado has said:[1]

"The right to water in this country by priority of appropriation, we think, is and has always been the duty of the national and state governments to protect. It is entitled to protection as well after patent to a third party of the land over which the natural stream flows, as when such land is a part of the public domain."

In the Clifton-Morenci district, Arizona, the mills are usually situated at some height above the main stream; thus the mill of the Detroit Copper Company is 1500 ft. above the bed of the San Francisco River, water having to be pumped from the latter source for milling purposes against this tremendous head. The reason for such a location is entirely one of the pollution of the

[1] Coffin vs. Left Hand Ditch Co., 6 Colo. 446.

river with tailing. When pumping against such a head, the utmost economy of water must be practised and the soluble copper and iron minerals form acid which makes a heavy attack on iron and steel. The San Francisco River is a torrential stream and during the dry season the flow would not be sufficient to carry off the tailing from the mills of the district. If the mills discharge their tailing directly into the San Francisco River, the bed of this stream would be choked, the agricultural lands below flooded, and the mines liable for damage.

The English law allows of no pollution of streams whatever. In the Cornish mining district early establishment of the business and custom have allowed of pollution of streams to the degree necessary for milling operations. In our western states the English doctrine prevails more strongly in those states which have followed the ruling that water cannot be preempted after land has been purchased from the government, namely, California, Oregon and Washington, than in those where the contrary ruling has been made, namely, Nevada and Colorado. The tendency is toward the relaxation of rigid restrictions as to the use of water. In no state would a pollution to the extent of a nuisance be permitted. For example, offensive slaughter house refuse and acid discharges would not be tolerated anywhere, as such wastes would render the water dangerous, unpalatable and unfit for any purpose. The deposit of tailing and sawdust in a limited degree would scarcely in any state be regarded as pollution to an extent requiring a prohibition by the courts. It should be borne in mind that most streams are muddy and the addition of a small amount of inner matter will affect the quality of the stream little, if any. During flood seasons far more solid matter is carried down streams than is usually discharged into them from mills or factories.

In one of the decisions of the case of Sanderson vs. Pennsylvania Coal Company the court said:

> "Undoubtedly the defendants were engaged in a perfectly lawful business in which large expenditures had been made and with which widespread interests were connected; but however laudable an industry may be, its managers are still subject to the rule that their property cannot be so used as to inflict injury on the property of their neighbors."

The case of Sanderson vs. Pennsylvania Coal Company is quite famous in legal annals. Sandersons purchased a tract of land in the vicinity of Scranton, Pennsylvania, and erected a handsome mansion on this land. One of the chief inducements to purchase was a fine stream of water flowing through the land called Meadow Brook Creek. At a large cost this stream was made to furnish a fish pond, ice in the winter, and its water was piped to the house. After this was done the Pennsylvania Coal Company opened a colliery and pumped the mine waters into Meadow Brook Creek. The waters were so injured by these acid additions that the fish were killed and the piping to the house rapidly corroded. On the first three trials of the case Sanderson won,

but on the fourth Sanderson lost, the court saying in effect that he had but suffered a personal inconvenience which must yield to the necessities of a great public industry.[1]

In the strictly mining states pollution of the streams would be permitted up to the point where such a pollution would constitute a nuisance, but in these states the owners of agricultural lands could obtain damages from time to time for injury sustained, though they could not obtain a permanent injunction. In the agricultural states injury to agricultural lands by the overflow of tailing would probably cause the issuance of a permanent injunction.

In the case of the Arizona copper miners a single mill would cause the flooding of bottom lands by tailing débris during low water. The damage from flooding agricultural lands seems to be due to a choking of the growth preventing water from reaching the roots. The year following such flooding, provided it is not repeated, the land after plowing is nearly as good as new. This does not apply to flooding where great masses of coarse tailings are spread over the land as well as fine and slimy matter. When this happens the soil is impoverished after plowing by dilution of barren rock. In copper mining regions it is possible that the acid water from the tailings destroys vegetable growth. The same claim is made in the lead mining districts, but when it is reflected that galena is absolutely insoluble in water (Comey) and oxidizes very slowly, such an argument is not entitled to much weight. It is said in these districts also that stock frequently becomes "leaded" by a process of collection of galena in the stomach of the animals and a slow absorption of poisonous salts or by the dead weight, leading to disturbances causing the death of the animal. I have never been able to run down a bona fide case of poisoning of this kind. For a great many years I was neighbor to a milk ranch and at regular intervals every day the cows used to go down to an artificial channel in which was running water heavily charged with lead slime tailings. The cattle liked it and throve upon it. Poisoning of animal or vegetable growth is largely a vagary of an idle imagination.

Impounding of tailing by dams can be practised in streams which are not of too torrential a character. In many mining camps the companies unite in such projects, as all derive a benefit from them. The water leaving the dam is good enough for all but domestic purposes and as springs and small uncontaminated brooks are used for the latter purpose, the dam should be entirely effective in preventing losses. At Clifton, Arizona, the Shannon Copper Company has placed its mill at a sufficient height above the San Francisco River to be out of the reach of floods and to allow of storage room for all but the finest tailing, the overflow from the settling pond. The sides of the pond are built up with the tailing and are kept a few feet above the level of the water, being raised from time to time as the accumulation of

[1] Sanderson could not obtain a permanent injunction. On the other hand damage was proved for which the coal company would be liable.

débris renders it necessary. Water for the mill is pumped from the river below.

Flat vs. Sloping Site.—The question of the slope of the terrain is one concerning which there has been much dispute. On one side the extreme opinion is advanced that the slope should be of sufficient magnitude that the ore once started at the top will flow on down through by gravitation alone. At the other extreme there are advocates for a flat site. When the history of the growth of milling practice in the United States is investigated it appears that examples of early milling in the United States are to be found either in the flat eastern parts of the country such as in the Lake Superior district, or in the stamp mills of Georgia and California or other mining communities patterning upon these latter. In one case the flat site is compulsory, in the other highly advantageous because the operations are so few and simple. The majority of ore mills erected today are in Western mountain regions and are not of the stamp-mill type, and the flat site is not compulsory. For the general run of concentrating mills a gently sloping terrain, from 15 to 28 deg., offers the most suitable ground. In the flat site elevators are needed at every turn while on the gently sloping one only for the main flow lines. A limited number of elevators is absolutely of no disadvantage whatever. The disadvantage of steeply sloping hillside for the complex operations required in a modern concentrating mill employing jigs, tables, screens, crushing and comminuting devices, etc., is so manifest as scarcely to need enumeration. On a 35-deg. slope for every foot of floor space gained on the solid, 0.7 ft. of retaining wall must be built. For a floor 30 ft. wide the retaining wall must be 21 ft. high. The cost of such a wall when supported by its weight alone and when made of concrete is $8 per cubic yard and for a width of 30 yd. is about $2500 exclusive of excavation. With such prohibitory costs for retaining walls on a steeply sloping site, the only procedure which can be followed to reduce the cost of walls, is to make the floors narrow and suspending a part of their width so as to reduce the height of retaining walls (the width of base increases directly as the height and hence the volume increases rapidly with the height). The length of the building required to house the machinery instead of being approximately the length of the floors, is this amount divided by the cosine of the angle of slope. When the combined length of the floors is 150 ft., the mill building on a 35-deg. slope must be over 180 ft. long. It is true that with such a great slope the building need not be so high for the screens and classifiers can be brought closer to the concentrating machinery, but very little decrease of height will result from this procedure.

With narrow step-like floors alterations in the arrangement of the machinery are well nigh impossible, the amount of labor required to operate the mill will be greater than if the mill were located on a more gently sloping site, for even in a very small mill one or more men will be required on each floor. In overseeing the work of the mill the superintendent will be exhausted by the amount of climbing necessary in the course of a day, and moving heavy

repair parts from the lower to the upper part of the mill will entail great consumption of time.

It is evident from the multitude of operations necessary in a concentrating mill, the gravitational flow system of arrangement in its extreme form (a high hillside) will scarcely suffice for taking in crude ore at the top of the hill and delivery concentrate at the bottom. If the mill be located in accordance with the recommendations at the beginning of this chapter, then it may be expected that the mill will be on gently sloping benches above the main streams of the district where almost ideal sites can readily be found. The point chosen for the mill should be above high flood water and if storage of tailing be necessary (the necessity of this step is being seen more clearly as time goes on), not only for avoiding lawsuits, but for a possible future reclamation of the values in the tailing by improvements in treatment, then a site should be chosen with a depression of a sufficient size to accommodate all the tailing which will accumulate during a long term of years. The site should be as nearly uniform in slope for a distance sufficient to accommodate the mill buildings and such auxiliary buildings as are necessary, such as shops, assay office, etc. If the ground rises sharply at the upper end of the site, it will offer better facilities for the location of the crushing plant, provided it is decided to erect a separate building for crushing, sampling and sorting.

The question of snowslides is one of prime importance in regions (such as the San Juan) of heavy snowfalls and precipitous slope. The high mountains of this district with low average annual temperatures, cause great amounts of water to be precipitated. The winds usually blow from the west as determined from the mountain summit. In the valleys the winds are commonly of the mountain and the valley type. The wind blows toward the mountains in the afternoon and occasionally attains considerable velocity. After sunset the wind subsides and toward morning there is a light breeze from the mountains toward the lower level. The west winds at the summits are frequently of high velocity, especially in winter and spring. The action of the wind as found at the summits of the mountains taken in connection with the deflections caused by the mountain masses is of considerable importance in packing snow on lee slopes and more so in combing over snow on the opposite side of the summits, thus creating conditions highly favorable for slides. Some information should be obtained from local authorities on these points before choosing a mill site. The precipitation in the San Juan region is over 25 in. a year, and there are but few areas in the State of Colorado which are as high. In the Coeur d'Alene region, Idaho, from which also not infrequent reports come of destructive slides, the precipitation is over 25 in. per year. As compared with the San Juan mountains this region is low in altitude, but is nearer the Pacific and forms one of the barriers against the winds and moisture of that ocean. A map of the Canyon Creek mill area in this region, one where much loss of life and destruction of property has ensued from snowslides, is shown in Fig. 6. There are many little

settlements along this narrow canyon and as an inspection of the map will show, practically the entire length is capable of furnishing the terrain for a destructive avalanche.

In the Coeur d'Alene region the precipitation is greatest with the exception of one summer month, in the months of October, November, December and January. It is about the same for these months and averaging

FIG. 6.

over 3 in. per month. There is a relatively low amount of precipitation in April but in June the precipitation reaches its highest point. The dryest month is August. February and March have high precipitation but not as high as the winter months. There is a gradual rise after the low precipitation of August to the heavy precipitations of the winter months. In the San Juan region the month of greatest precipitation is March. The lowest

month is June, but there is not much choice in the matter of precipitation in the other months of the year, they being between 2 and 3 in. The precipitation in March is nearly 5 in., often more. The precipitation in January and February exceeds that of November and December.

Snowslides are apt to be more frequent in the San Juan region than in the Coeur d'Alene, for the higher slopes are almost bare of timber and a greater number of precipitous slopes exist. About twenty-five years ago the camp of the Custer mine in Nine Mile Canyon was swept away

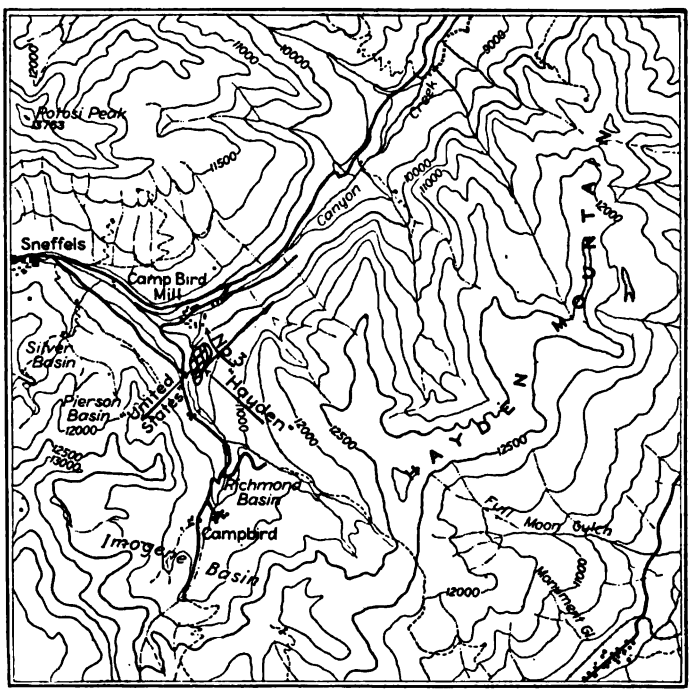

FIG. 7.

causing the loss of the lives of 7 men. About twenty years ago a snowslide in Canyon Creek at the Black Bear mine below Mace killed a number of persons and in an appalling disaster some years ago near the town of Mace more than 30 lives were lost. In both the case of the Coeur d'Alene region and the San Juan region, the most dangerous period of the year is the spring when the heavy winter snows begin to melt. If there are spring rains, the snow becomes heavy and in the condition called rotten and ready to give way from slight cause. A freeze of an old snow surface followed by a heavy fall of snow gives unstable conditions which may bring both layers down the mountain side. Even the most apparently safe position in the mountains may not be beyond the reach of avalanches

and in this connection the destruction of the Camp Bird mill in March, 1906, may be cited.[1] The slide which destroyed this mill ran for a considerable distance over flat ground and fell over a cliff on to the mill building. The mill structures were not in the path of any known recurring slide. The "United States" and "Hayden" came down almost together filling the gully below where they met (see map). The small slide "No. 3" ran down the mountain side after these occurrences encountered the mass of snow in the bottom and was deflected in a northerly direction toward the mill. The destruction caused by this small slide with the ensuing fire wiped out the mill. An examination of the map Fig. 7 will show that the United States slide

FIG. 8.

starts from a cirque affording a basin in which snow can accumulate if wind and other conditions are right. These cirques have been formed by geological agencies acting on horizontal beds of igneous and sedimentary rock. The photograph of Imogene Basin Fig. 8 shows this structure very well.

In a snowslide region the mill should never be placed at the bottom of a steep slope. If snowslides have run down one slope, they are apt to recur for the mountain side has been smoothed by the passage of the first slide mak-

[1] As described to me by Mr. David R. Reed of the Camp Bird, Limited.

ing a recurrence very possible. Never locate near a recurring slide. The distance which slides will run is often incredible. They will often, after crossing a wide valley, create destruction far up on the hill slope on the other side. An up and down canyon or gully is often a favorable seat for recurring avalanches. The wind which accompanies snowslides has quite a destructive range.

Two forms of slides are recognized due to difference in the weight per square foot. The light dry snows cause avalanches which are apt to run in the earlier months of winter. They travel at a far faster rate than the avalanches of wet snow. Both types of avalanche are always accompanied by heavy gusts of wind. The spire of the church in the town of Dissentis in the Grizons, the largest and easternmost of the cantons of Switzerland is said to have been thrown down by the gust of an avalanche which fell a quarter of a mile away. I have seen evergreens 6 in. in diameter cut off by the air blast of a snowslide hundreds of feet up a slope above the point where the slide came to rest. In our western mountains the dust avalanches are relatively rare, the slide of wet snow being the more common.

As modes of protection against slides rock filled cribs have been tried successfully. At the Liberty Bell mine a V-shaped rock filled crib was built. At this mine in the Telluride district 18 men lost their lives in 1902. A V-shaped crib was built with the point uphill. In 1906 this device was tried by a slide and resisted it successfully.

Grading Mill Sites.—For the purpose of making computations as to the amount of cutting and filling necessary on the mill site, it will be convenient to run parallel transit lines about 25 ft. apart, taking elevations along these lines at 25-ft. intervals. From this information contour lines may be put in from which the cut and fill can be computed. The mode of making these computations will be found in any treatise on surveying. After the mill is designed and the floor plan obtained, a tracing of the profile of the mill floors and retaining walls can be laid on a section obtained from the contour lines at the exact site and adjusted until the floors are on the solid to any desired extent or suspended to any desired amount. Having fixed the position on the profile, it can be transferred to the contour plan and the amount of cutting computed in the way already suggested.

Foundations.—The character of the foundation material in mountainous regions is usually such as to give very little concern to the metallurgist. As we ascend from the bottom toward the summits rock in place is found more and more near the surface. The rocks themselves if they do not crop boldly, will be covered with a light amount of top soil containing vegetable matter and immediately under will be found a species of hardpan containing cemented angular fragments. The lower slopes of the mountains differ from the upper only in the amount of débris which has collected at their bases. Where the débris is of the nature of talus, it will not offer a secure foundation, but the presence of this uncemented débris is usually readily detected. There is no

objection to uncemented débris provided it is well compacted or if it be supported on all sides by firm material, but cases of this kind are rare; the toe of the rock pile usually points down-hill and as it is generally slowly descending, foundations will in time be thrown out of line by its movement. Location on fresh alluvium in the bottoms should be avoided, but deep old alluvium which has filled the valleys to a great depth, is perfectly safe. Foundations should always be carried down through the surface soil containing vegetable matter into solid material beneath. On mountain sides the foundations must usually go deeper than on flat or gently sloping ground, that is, unless the foundations be located on cropping rock. If the rock is relatively near the surface, it will be best to carry the foundations down to it and this applies more particularly to mountain side locations. In locating foundations on rock, the decayed portion must be cut away and removed and the load put upon it should not exceed one-eighth the crushing strength of the rock.

BEARING POWER OF SOILS[1]

Kind of material	Bearing power in tons per sq. ft.	
	Minimum	Maximum
Rock the hardest-thick layers, in native bed	200	.....
Rock equal to best ashlar masonry	25	30
Rock equal to best brick masonry	15	20
Rock equal to poor brick masonry	5	10
Clay on thick beds, always dry	4	6
Clay on thick beds, moderately dry	2	4
Clay, soft	1	2
Gravel and coarse sand, well cemented	8	10
Sand compact and well cemented	4	6
Sand, clean, dry	2	4
Quicksands, alluvial soils, etc	0.5	1

The danger of a clay-bearing bottom is that even if dry it is apt to become wet in the milling operations and squeeze from under the foundations. An inclined wet stratum of clay unsurrounded by firm material, forms the most dangerous foundation that can be conceived and disaster will ensue from location of buildings of any weight upon it. A clay soil containing a liberal admixture of sand and resting in horizontal beds and well compacted offers a good foundation. In the northern camps it will be well to carry the foundation trenches below the lowest frost line which may be as much as 6 ft. In testing for solid ground on the mill site, trenches may be sunk until rock is reached or until a hard impervious stratum is reached which unmistakably shows evidence of not having partaken of any movement. Unless the rock is very deep, it will be best to form an accurate idea of how deep it lays with the view of carrying down to it all piers for supporting the crushing machinery. Where practicable it will be best to carry these piers down to the rock, taking care in the erection that they are entirely free from the rest of the con-

[1] Treatise on Masonry Construction by Ira O. Baker.

struction. In this way vibration in the superstructure is largely eliminated, being absorbed by the foundations. The object of proceeding down to a firm stratum is not so much to obtain an unyielding bottom as one which does not yield markedly. By computing the weights resting on the foundation at various points and suitably spreading the foundations proportionate to the load at the different points, a uniform subsidence can be obtained and this is rather the desideratum required than absolute unyielding. The old spread foundations in Chicago rested in mud, but were so nicely calculated that the marked subsidence which took place after the completion of a heavy building did not endanger its stability. In digging foundations for retaining walls and piers no more material should be removed from the trenches than is absolutely necessary, and after the foundations are in place the material removed should be filled in around them. The importance of this will be recognized from the following tests made in the foundations for the government printing office, Washington, D. C.[1] A 12 × 12 stick was placed on end in the trench to be tested and loaded.

"Under a load of 7000 lb. it showed a settlement of 0.1 ft. within less than 30 minutes from the beginning of the test. Under a load of 20,000 lb. and after a lapse of an hour and a half, the settlement was 0.686 ft. and increasing. Unloading was then commenced, the settlement increasing meanwhile to 0.793 ft. . . . . A careful examination indicated that the settlement was entirely due to the wet sand working out from under the end of the stick . . . . and the fact that there was no weight on the sand immediately around the base of the stick . . . . The stick was then placed in the pit again, and sand from the excavation thrown in around it to a depth of about 6 ft. Under a total load of 22,370 lb. and after 48 hours, the maximum settlement was 0.044 ft."

In building piers or other foundations of concrete, the outer 2 in. should be not considered as capable of receiving any pressure as the material in this portion next to the forms is unsound.

Footings are generally made of concrete and should be spread in the form of a truncated four-sided pyramid, the base of the pyramid resting directly upon a concrete base, this in turn resting directly upon the ground. The concrete base which is about of the same dimensions as the base of the pyramid, may be of concrete 6 to 10 in. deep. The sizes of the piers will depend upon the calculated weight of the post and portion of the superstructure resting upon it both live and dead load and including, of course, its proper proportion of the weight of the machinery. With the uniform character of the foundation material to be found in mountainous regions, the amount of subsidence will usually be too small to measure with the comparatively light weights of mill structures, consequently all that need be done is to make the footings proportional to the load, using a liberal factor of safety, say 10 for the footings. Every post in the superstructure should have a concrete

[1] Chief of Engineers Report, U. S. War Department, Part 4, 1904.

footing, whether it is for a wall plate or an interior post. In steel construction foundation bolts will have to be set in the concrete while it is being put in place and following the blue print foundation plan. Where wooden posts are being erected some engineers merely rest the post upon the pier supporting them until the erection of the superstructure secures it in position, when the weight of the superstructure and the floors built around the piers, etc., will hold it in place. If the post is framed into the ends of sill timbers resting upon the piers, such procedure will be good enough, but where the post rests directly upon the pier, it will be found better both for security in erection and for any possible future contingency to set into the concrete a stout, steel pin projecting above the top of the pier 4 or 5 in. and fitting into a corresponding hole in the end of the post. The practice of burying the end of the post in the concrete gives too much trouble in erection, renders rectification of mistakes impossible, and has no good feature to warrant it.

In inferior construction short posts are made to arise from small pits into which is thrown some concrete and on top of these short timbers the sill timbers are laid. Another practice is to cut longitudinal and cross trenches, the intersections marking the positions of the posts and secure the advantages of a spread foundation by laying planks on the concrete upon which to rest the post. The disadvantage of this is that the trenches are apt to cave in and the footings will become rotten. The placing of the posts directly upon the ground without any preparation with the exception of a short length of board to act in the nature of a spread foundation, is a practice which I have seen in a few cases and is as bad as can possibly be.

Retaining Walls.—In designing retaining walls the information given by Trautwine is usually used by engineers for computing the width of the wall at the base. As, however, the theory upon which the design of retaining walls is based is the same that is considered in the next chapter in discussing the theory of the design of bins, some theoretical considerations will be given here. In all the formulæ which have been deduced by mathematicians for resultant earth pressure per ft. of length of wall, Weyrauch's, Coulomb's, Rankine's and others, the final expressions obtained are the same where the wall is not surcharged and the rear surface of the wall is vertical. The formulæ given by Trautwine also accords in this case. A full discussion of these various theories cannot be given here, nor would it serve any useful purpose to do so. A complete theoretical discussion will be found in "The Design of Walls, Bins and Grain Elevators," by Milos Ketchum. Rankine's theory from its simplicity of assumptions and from the simplicity and ease with which the different steps proceed in the derivation of formulæ, is the one best suited to the student. It gives expression more in accordance with fact than the other theories and answers all questions satisfactorily. In Rankine's theory the filling back of the wall is supposed to be a uniform mass of particles which do not adhere to one another and the only forces holding them up neglecting the reaction of the wall, is the friction of one particle

on another. As the large majority of cases both in ore-mill retaining wall design and in ore-bin design deal only with vertical surfaces in contact with the material to be upheld only this case will be considered.

If we plat an ellipse of the form $\frac{x^2}{h^2} + \frac{y^2}{v^2} = 1$, v will represent the vertical unit pressure for depth of the wall d, v is consequently equal to wd where w is the weight of a cubic foot of material back of wall. Rankine's theory shows in that the relation of v to h, the horizontal pressure is given by the expression $h = v\frac{1 - \text{Sin } \phi}{1 + \text{Sin } \phi}$, ϕ being the angle of repose of material back of wall; we thus have the relation of the major and minor axes of the ellipse, h being the horizontal pressure per square foot at any depth d, x and y representing respectively vertical and horizontal pressures at any intermediate depth. In the case of a vertical retaining wall unsurcharged h is the unit pressure at the bottom of the wall, and since the total horizontal pressure must increase uniformly from the top of the wall to the bottom, there is a triangle of pressure whose base is $v\frac{1 - \text{Sin } \phi}{1 + \text{Sin } \phi}$ and whose altitude is d, the total pressure per ft. of wall is consequently $1/2wd^2\frac{1 - \text{Sin } \phi}{1 + \text{Sin } \phi}$. For vertical retaining walls we may disregard this theory for practical purposes following the practical recommendations given by Trautwine. The use of the theory for bin walls will be given in the next chapter.

CHAPTER IV

CRUSHING PLANT

In this chapter in addition to the general factors surrounding the erection and equipment of crushing plants, will be considered only such devices and machines as are particularly used in the coarse crushing departments of mills. Machinery sufficiently important to warrant separate description such as shafting, prime movers, crushers, screens, rolls, elevators will be found elsewhere. The design of bins will be found under this chapter and descriptions of accessories such as gates, conveyers and other devices pertinent to them. Fixed grizzlies will also be treated under this chapter for although they are screening devices, they are only to be found in the coarse crushing department. Means for sorting and coarse sampling will be given as well as the theory of sampling. The theory and practice of dust-collecting apparatus will be given and the theory and practice of ore sorting.

It will be found preferable to house the coarse crushing equipment in a separate building. If the ore must be crushed by crushers, rolls and comminuting machines to a fine state of division before any separating operation takes place, economy demands that all the unlocking devices be grouped together. If separation follows successive reduction in size, the original ore or products derived from it, then up to the stage of the first separating operation, the unlocking machinery should be grouped together. In small mills the usual practice is to combine the unlocking and separating operations; thus the ore will pass a crusher and rolls, and from the rolls by way of an elevator discharge into a battery of screens. The oversize from the first screen is sent to rolls and is again brought back to the head of the battery of screens, the object at this point being to force all the ore entering the mill to pass through the first screen, or in other words the ore is said to be crushed to a certain limiting size. It will be shown later that this mode of combined unlocking and separating seriously affects the screening and separating work. In some small mills there exists the very bad practice of taking the oversize from the first screen directly to jigs and performing a concentrating operation there. This is a poor way of avoiding that important requirement which first confronts the metallurgist, the unlocking the ore to a definite maximum size, for with this procedure the size of ore undergoing the first separating operation is not determined by exact sizing devices but by the sets of unlocking machinery, a very variable thing. At this point in the concentration precise sizing is more needed than in later operations, for the finer the crushing, the greater degree of unlocking, and conversely, the coarser the crushing,

the greater the degree of dissemination of valuable mineral in worthless rock; consequently the greater the number of pieces with a specific gravity approaching that of worthless rock. Where the sizing presents too great a range, there is more danger of these middling pieces passing away with the worthless rock, provided a system of jigging is employed in which tailing as well as middling are made. If the better practice prevails (returning the oversize from the first screen after crushing, not to the battery of screens from which it came, but to a separate one) then the evil which has been spoken of will be avoided. In this case as in the others, there will be no saving in the equipment required in unlocking. A most decided disadvantage will ensue from not being able to arrange it in the best way, for the two problems of best arranging the separating and unlocking machinery cannot be satisfactorily answered unless they are kept separate. This will be understood more clearly when it is shown that the two kinds had best be arranged when it will be evident that the two cannot be advantageously grafted upon one another. It will be best to have a fourth wall separating the crushing machinery from the concentrator proper if only to avoid the dust and noise. Again, since under the most compact way of separating the two kinds, the upper end of the concentrating mill proper will be occupied by a bin for crushed ore and to fill this bin from the crushing plant will require that the latter be set back either to the rear or side of this bin; it will therefore be cheaper to wall off the crushing plant than to extend its roof over the crushed ore bin of the concentrator building.

It will be found best to support the machinery and other equipment for the crushing plant as directly as possible on the ground. This will free the interior of the building from heavy posts and reduce the housing to a light framed structure sufficient merely to stand snow and wind pressure and such light weights as stairways, man and package elevators and some shafting. The sheave of a package elevator can be supported from guides of sufficient strength resting on the ground.

The principal operations which must be undertaken in the coarse crushing department are crushing to a limiting size and sampling. Where the ore demands sorting mechanical means must also be arranged for it in this department. If the ore requires drying which is only the case when all the ensuing operations are conducted with dry ore, then arrangements for drying should be made in the coarse-crushing department. Sampling and sorting are operations seldom found in the average mill simply because the concentrating and crushing equipment are jumbled together as a false measure of economy.

As a suggestion for the reader in the matter of crushing plants, a simple line plan and elevation is given in Fig. 9 for a small crushing plant, 200-tons capacity in eight hours, showing correct principles of arrangement. The plant provides for sorting, sampling and crushing to a maximum size of about 1/4 in. Sorting is provided for 3-in. to 1-in. ore by grizzly and shaking launder leading

to the first crusher, the ore being sorted in the launder. Sorting from 3 in. to 1 in., which is the limit for this operation, is provided for by a picking belt fed by the oversize of a 1-in. grizzly. In general it may be laid down that it does not pay to crush for sorting, and sorting must be arranged for as an intermediate operation before crushing or between the necessary crushing operations.

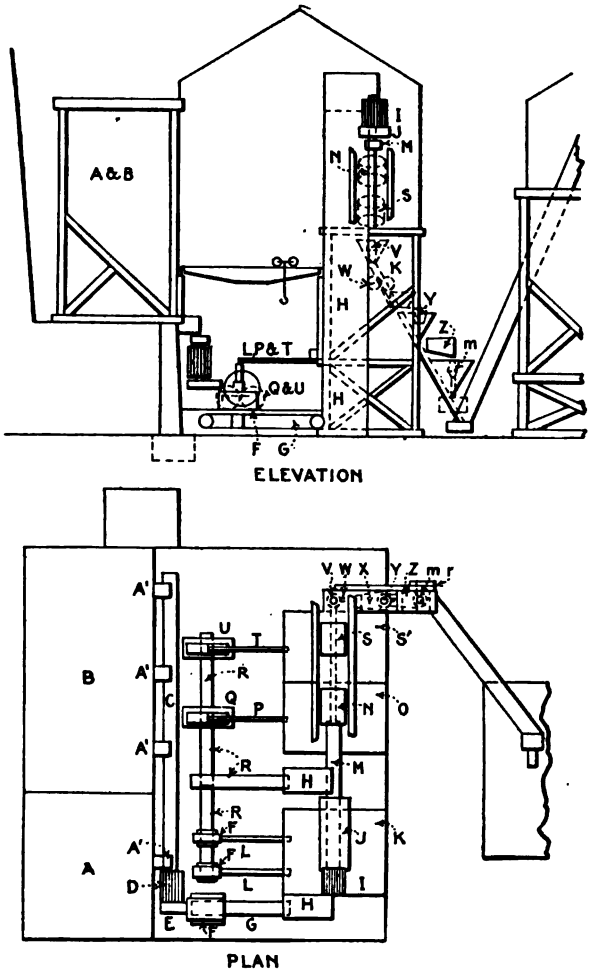

A, Crusher bin.
A', Chutes or feeders.
B, Storage bin.
C, Conveyer to crusher.
D, Grizzly.
E, Shaking feeder.
F, F, F, Crushers.
G, Conveyer to elevator.
H, H, Elevators.
I, Grizzly.
J, Sorting belt.
K, Bin, oversize of grizzly.
M, Undersize belt to trommel N.
O and S', Oversize bins of trommels *N* and *S*.
L, L, P and T, Feeders.
Q and U, Rolls.
R, Conveyers.
V, W, X, Y, Z, m and r, Sampling devices.

FIG. 9.

Having decided what crushing operations are necessary, the sorting operations can be installed at convenient points, preparation for sorting being obtained by the use of screening devices. The screens are mounted upon the bins which feed the crushing machines and the bins themselves rest in turn directly upon the ground. The elevators are also supported to some

extent upon the bins, though their main footing is upon the ground. The elevator boots rest directly upon the ground and are accessible from four sides. A boot for an elevator should never be set in a pit whether for elevating ore and water or dry ore only. This is a caution especially to be observed in elevating dry material in a coarse state of division as stoppages due to jams in the boots are much more frequent than when elevating more mobile fine material whether wet or dry. For ease of clearing the boot and repairs at this point, it is preferable to have it approachable from all sides.

The sampling plant calls for flow-retarding devices following each crushing operation; conical drums are indicated for this purpose. Sampling in a rock house for a concentrating mill can be carried on to somewhat greater advantage than in a custom sampling plant, for it is not imperative for smelting purposes to have the ore in a coarse state of division. Moreover, as the ore must be finely crushed before entering the mill proper, there is nothing gained in taking the first cut following the first crusher as is the common practice in custom sampling plants or other plants whose only function is sampling. Where the sampling is left to the end of the crushing operations, two cuts of the finely divided and thoroughly mixed ore can often be taken before finer crushing is necessary, and if desired these cuts may be one-fifth of the whole stream followed by one-fifth of the sample stream from the first cutting, making the weight of sample but 8 tons before further crushing is necessary, whereas the tenth cut, which is commonly employed in sampling plants, gives 20 tons on a first cut and must immediately be followed by crushing, if the ore be sampled below the main breaker. The crushing machinery is all mounted on the same longitudinal line and on short concrete bases which are entirely free from the superstructure, thus avoiding a heavy framing for resisting the vibration and supporting the weight of these machines. The crushing machinery is driven by a jack shaft placed under the bins supplying the crusher. The bearings for the jack shaft are supported by small piers resting on the ground. It is evident from an inspection of the drawings that the entire space over the crushing machinery is clear to the roof. This allows complete freedom of movement to the repairing crane which is shown above these machines. This crane is light and simple and is drawn along by a hand-chain gearing, the trolley being moved in the same way. The hoist is a suitable chain block secure to the hook of the trolley. For a small installation I prefer two 6 × 20-in. breakers for reducing from 3 in. to 1–1/4 in. to a set of giant rolls. The roll is more suitable for large crushing operations. The Blake type of crusher has also been selected to do the first crushing. Conveyers are employed to take the crushed products to the elevators.

It will be best to have the crushing machinery fed by nearly horizontal feeders, for in allowing the ore to flow by inclined landers directly to the crushing machine too much head room is taken. It will be noted that each oversize product has a separate bin. These not only afford support for the screens, but provide means of keeping the crushing plant in operation while

any individual machine is being repaired. Wooden bins have been shown in the plans, but steel bins of rectangular or circular outline could be substituted if desired.

Stairways.—All stairways and main passage ways in mills and rock houses should be not less than 5 ft. wide, otherwise while serving to allow men to pass along, accidents are apt to occur while moving supplies, repair parts, etc. Stairways should always be shown in full detail in mill plans. They are often entirely omitted from the plans, with the result that when the mill is erected they must frequently be placed where they are in the way or at too high an angle, too narrow or with too many turns. Where it is necessary to turn the stairway, a roomy platform should be provided. Stairways should be erected in the most substantial manner, as it is uncertain in repairing how much load they will have to bear. The rise should not exceed 7 in. and 6 in. is preferable. If the steps have a 6-in. rise the run should be 10 in., and an inch should be *taken from* this measurement for every inch of increased rise.

Ore Bins.—Bins used for mills are constructed of wood or steel. Wooden bin designs will first be considered. Wooden bins should have a hoppered bottom placed at an angle of 45 deg., and this is particularly desirable for the bins receiving ore from the mine. The run-of-mine ore contains many large pieces which build up at steep angles of repose upon themselves at a much less angle of repose than on a smooth inclined surface. It is very common in wooden bins with flat bottoms to find only a cylindrical space cleared about the gates, the ore standing up nearly vertically when in large slabs. The closer the gates are together in a flat-bottomed bin, the greater the uninterrupted runout after the bin is filled. The argument for a flat-bottomed bin is that it provides more storage room so that if there is an interruption of the supply of ore from the mine that portion of the ore which lays dead in the bin is available for milling by shovelling. As it costs money to shovel out a bin, the advantage of storage is more than offset by this expense. In bin design capacity should be ample for all contingencies, at least enough for 48 hours' run. Sill timbers should not be allowed to rest directly upon soil. If the bin rests upon flat ground three rows of piers may be built under the sills, one row being directly under the front posts, the second under the center of the sill timbers, and the third under the rear posts, or the bin may rest upon two or more parallel longitudinal walls. If the bin be of great width, additional rows of piers may be necessary, or it may be advisable to cut cross trenches at each sill and fill with concrete. For bins supported partly on retaining walls and partly on the solid, it will often be advantageous to concrete the whole flat surface in the rear of the retaining wall and rest the sill upon this concrete floor. The cutting of a terrace for a bin fronted by a retaining wall, must be carried back until there is no danger of loose material sliding down on to the sill timbers and setting up decay. Where the bin is set upon a terrace cut out of rock and fronted by a light finishing

wall, concrete may be advantageously employed for surfacing the rock, giving a horizontal plane surface for seating the sill timbers.

For wooden-bin structures only sound straight lumber should be used. Oregon pine is almost ideal for this purpose, being obtainable in sticks of the very largest size entirely free from knots. Oregon pine is quite resilient, resisting well the sudden shocks to filling or emptying bins and does not decay easily; it is highly impervious to water.

In designing wooden bins it must first be determined what dimension to employ to secure the desired storage capacity. Broken ore will vary in weight from 90 lb. per cubic foot, for slightly mineralized quartz, to 130 lb. per cubic foot for rich galena ores. In the calculations which follow it will be assumed that 1 cu. ft. of broken ore weighs 115 lb. From the desired tonnage to be held by the bins may be obtained the capacity in cubic feet, by adopting as a factor, an estimate of the weight per cubic foot, or experiments may be made to determine this factor with accuracy. It remains next to consider the relations of length to height and width. For purposes of computation on this point, the ore may be considered as enclosed by a four-sided truncated prism the two longest edges of which are equal and represent the inside depth of the bin at the front face, and the two shortest edges of equal length as the depth of the bin at the rear face. The truncating plane has a slope with the horizontal of 45 deg. and represents the sloping bottom of the bin. In considering the relation of the width to the depth we need consider only a cross-sectional slice of the truncated prism 1 ft. long. If x be the height of the bin, then we have the following relations for capacity:

Height	Width, in terms of x	Capacity, proportional to expression below, area of slice, 1 ft. wide
x	x	$0.500x^2$
x	$0.9x$	$0.495x^2$
x	$0.8x$	$0.480x^2$
x	$0.7x$	$0.455x^2$
x	$0.6x$	$0.420x^2$
x	$0.5x$	$0.375x^2$
x	$0.4x$	$0.320x^2$
x	$0.3x$	$0.255x^2$

Capacity with increased width increases so slowly after the width becomes greater than 0.7 the height that this is about the limit for width for any gain. Where it is desired to get the bin under the main mill building roof and within the walls of a relatively narrow building, then a wide bin may be constructed if desired. Bins increase in cost very rapidly as the height rises. Relatively long, low and narrow structures give capacity at the least cost. In small mills the bin receiving ore from the mine has usually but one gate leading to the first crushing machine and it is desirable to have all the ore or nearly all the ore run uninterruptedly by gravity to this machine. Where this is

the condition to be satisfied a deep wide bin is called for. A drawing of the receiving bin, at the Mammoth mill, and a little bin for sorted ore in use at Minas Tecolotes y Anexas, San Barbara, Mexico, are shown in Figs. 10 and 11 and will serve to illustrate typical wooden bin design. The Mammoth bin should have tie rods at the foot of the posts though none are shown. The Mexican bin has no string courses and while this is permissible in this small short structure, they must not be omitted in longer structures. In addition to the ordinary cast-iron washers for the tie rods, there should be under them a steel rolled plate of square outline and of the same dimensions as the

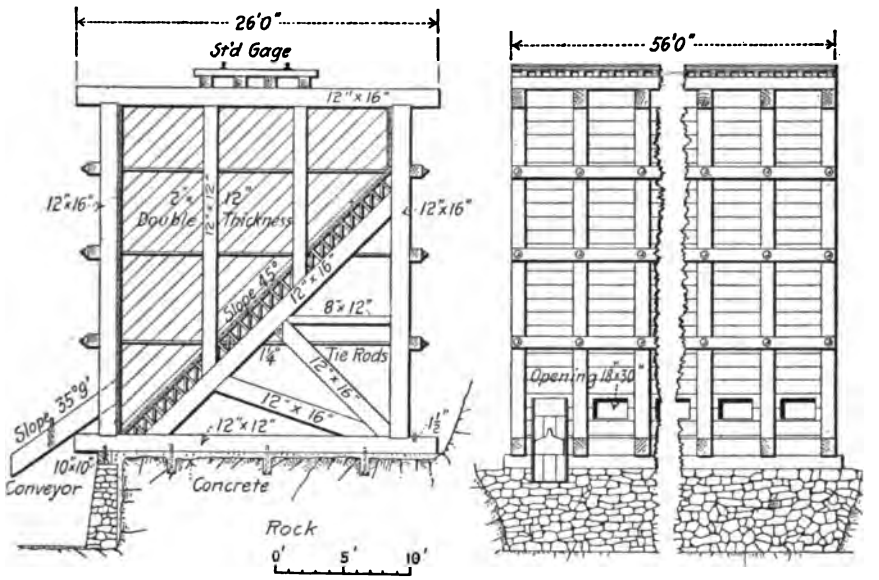

FIG. 10.

depth of the string courses. The ordinary cast-iron washers have not sufficient bearing area and will bite into the wood before much strain is thrown on the tie rods. The Mexican bin is interesting from the fitting of the foundations to the contour of the ground. Its rather great overall height is accounted for by this fact and the further one that it had to be installed in a very narrow compass. Fig. 12 shows a bin recently designed by me on the theory which is given later. It has four pockets, two for serving railroad cars and two for serving crushing machines. Fig. 12a shows the Bunker Hill and Sullivan Mill bin.

Design of Bin Walls.—In the preceding chapter some elementary formulæ applying to the theory of bins was given. The formulæ for the total unit bearing pressure and the unit pressure at any depth was given for retaining

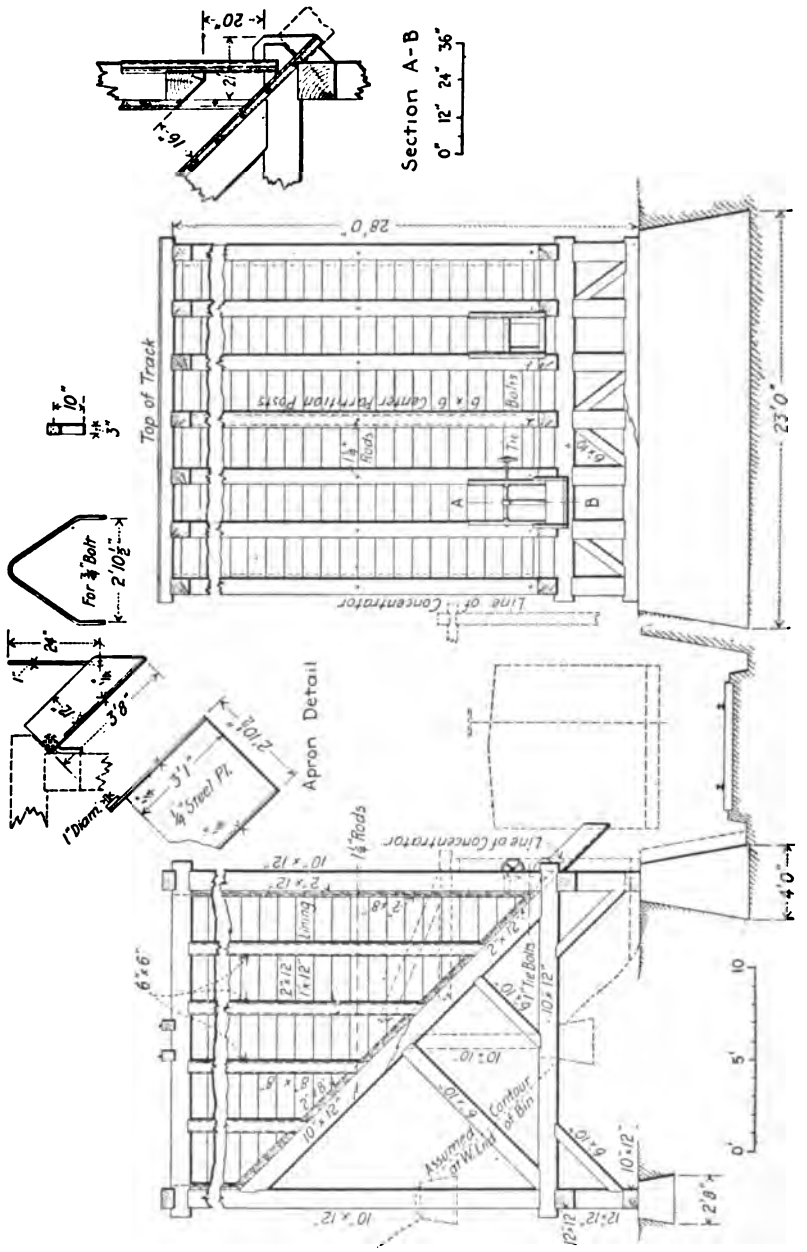
Section A-B
0" 12" 24" 36"
Top of Track
28'0"
23'0"
6 x 6 Center Partition Posts
Tie Bolts
Line of Concentrator
Side Elevation.
Apron Detail
For ¾" Bolt
2'10½"
¼" Steel Pl.
1" Diam.
Line of Concentrator
Lining
Tie Bolts
Contour of Bin
Assumed at W. End
End Elevation

FIG. 11.

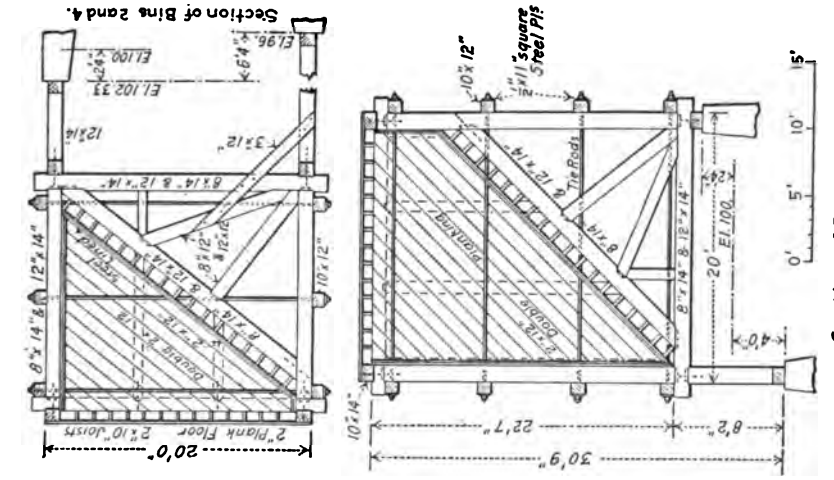

Fig. 12.

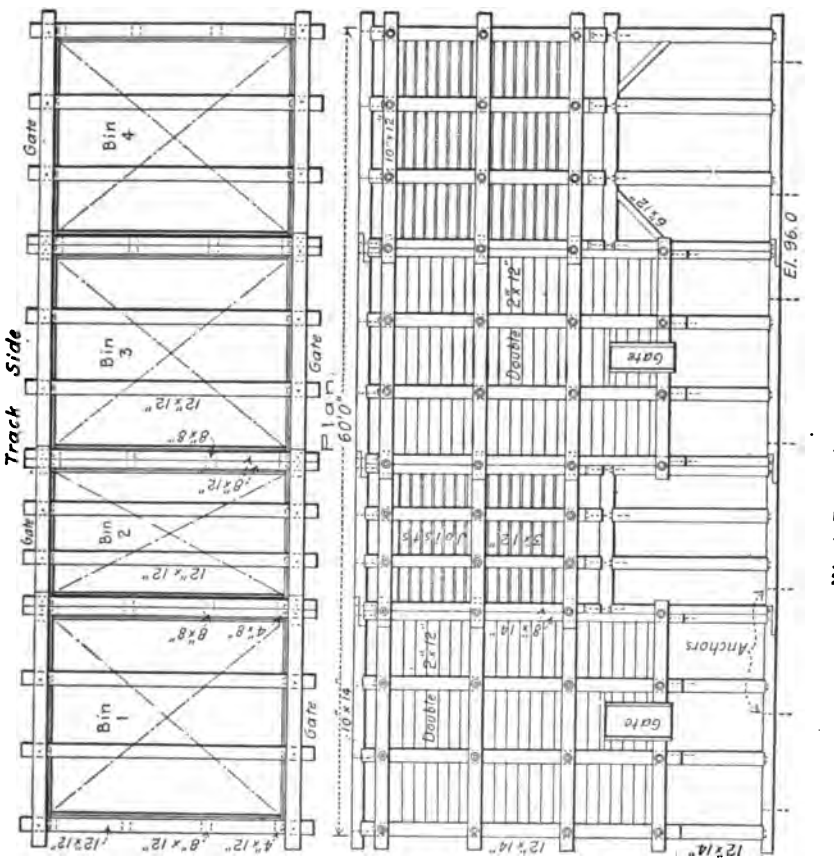

West Elevation near Crushing Room.

walls and will apply to determining the pressure on the front and rear wall of an ore bin where the walls are vertical planes and the bin is not filled higher than the top, or as it is called, surcharged. The angle of repose, ϕ, varies with the nature of the material and its size, the latter factor being of more importance than the former. The angle of repose is that which is obtained when material is piled up loosely. Such angles determined by experiment are of value in determining what slope material will stand in a nearly empty flat-bottomed bin, but for a bin wall calculation, what is desired is the angle upon which material under pressure wi l slide. This angle, as has been determined by experiment, varies from 10 deg. for fine sand to 55 deg. for coarse slabby material, like ba'last. The corresponding angles of repose vary from 30 deg. to 55 deg. An examination of the ratio $\frac{1 - \sin \phi}{1 + \sin \phi}$ shows that as ϕ diminishes, the pressures increase. A high angle of repose or

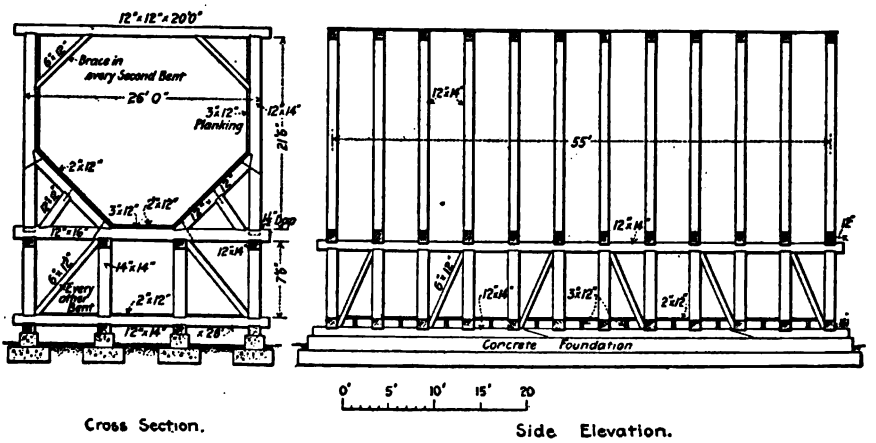

FIG. 12a.

internal friction would be safe and permissible in designing flat-bottomed bins to hold coarsely broken ore from the mine. The angle ϕ must be taken as 45 deg. with a hoppered bottom, since this is the almost universal slope of the bottom. Let it be assumed that the bin is 20 ft. deep and 14 ft. wide at the top and that the bottom slopes 45 deg. Then the total bearing pressure for the front wall, per ft. of length as calculated from the formula, $200 \times 115 \frac{1 - \text{Sin}\,\phi^1}{1 + \text{Sin}\,\phi}$ is 3910 lb., applied at a point 1/3 way up. All this load may be considered to be uniformly distributed over the vertical front post at one bent. Actually, of course, the load increases from zero at the top to the maximum at the bottom and a post should increase in thickness

[1] See formula, p. 56.

from top to bottom. If x is the span between bents of the bin, then the total stress on a single bent will be $3910x$. It is assumed that the deflection of the span shall not exceed 1/300 the length of the post (which will be conservative engineering practice). The maximum deflection allowable for a beam with a uniformly varying load, ranging from zero or R at one end of a beam supported at both ends to a value R' at the other end, is a complicated expression. For practical purposes it is usual to find the total amount of the load in these cases and consider it as a case of uniform loading, or the total load divided by l, the length of the beam, will give the load per unit of length under this assumption. In the case under consideration the load per unit of length is 195.5 lb. per ft. of length, or 16.3 lb. per in. of length. It is safe to make the assumption just given, for a little reflection will enable one to see that the deflection under the uniform loading will be somewhat greater than under the actual uniformly varying loading. The formula for deflection of a beam uniformly loaded and supported at the ends is: $v = \frac{5Wl^3}{32\,E\,bh^3}$, where W is the total load in pounds, b the breadth in inches, h the depth in inches, l the length in inches, v the greatest deflection in inches and E the modulus of elasticity of the material in lb. per square inch. The modulus of elasticity may be taken as 794,274. As, however, the post is nearly entirely rigidly fixed at the top and bottom by mortising and tie rods, we may use a formula $v = \frac{2Wl^3}{32\,E\,bh^3}$, the formula for beams rigidly fixed at each end being $v = \frac{Wl^3}{32\,E\,bh^3}$. In designing the longer timber of the bent so as not to exceed a certain deflection we may proceed in one of two ways. We may adopt a standard sized timber and proceed to find how great a spacing of the bents is permissible or we may adopt a certain spacing and determine what is the proper sized timber to go with it. The latter mode of attack will be illustrated here. From the formula above and assuming the spacing of bents is 4 ft., or 48 in., we have as the total load on the column, neglecting the weight of the timbers, 15,640 lb. $bh^3 = \frac{2Wl^3}{32Ev}$ which equals, substituting the proper values, 21,629. Now, by reference to the table of cubes below for the smaller values, we find that 12^3 is 1728 and the product of this by 12 is 20,736, or in other words the stick nearest standard lumber which will satisfy bh^3 equals 20,736, is a 12 × 12. The standard sizes of large sticks to be found in the yards are as follows in inches:

6 × 6	8 × 8	10 × 10	12 × 12	14 × 14
6 × 8	8 × 10	10 × 12	12 × 14	14 × 16
6 × 12	8 × 12	10 × 14	12 × 16	
6 × 14	8 × 14	10 × 16		
6 × 16				

Values of l^3			Values of h^3 from 6 to 16	
Feet	Inches	Cube	Inches	Cube
10	120	1,728,000	6	216
11	132	1,299,968	8	512
12	144	2,985,984	10	1000
13	156	3,796,416	12	1728
14	168	4,741,732	14	2744
15	180	5,832,000	16	4096
16	192	7,077,888		
17	204	8,489,664		
18	216	10,077,696		
19	228	11,852,352		
20	240	13,824,000		
21	252	16,003,008		
22	264	18,399,744		
23	276	21,024,576		
24	288	23,887,872		
26	312	30,371,328		
27	324	34,012,224		
28	336	37,933,056		
29	348	42,144,192		
30	360	46,656,000		

The next point to be determined is the thickness of board to be employed between the bents. To determine this we must employ the maximum unit pressure which is found at the bottom of the bin over a span 4 ft. long and adopt the formula for v for uniform loading where the ends of the beam are firmly fixed, which has given, $v = \frac{Wl^3}{32\,E\,bh^3}$ or h^3 equals $\frac{Wl^3}{32\,Ev}$ since $b = 1$. In this case W is wl where w is the unit pressure of 2.716 per sq. in. A maximum deflection in this case of 1/300 would amount to 0.16 in. It would create a bulge, which while the board would not be unsafely loaded, would not have a good appearance. It will consequently be better to adopt as the maximum deflection one not exceeding 1–1200 of the span, or 0.048 in. In the case under consideration, h^3 equals 11.0 or h equals 2.3 in. as the proper depth. 2–1/2-in. boards would satisfy the conditions, practically. In a fairly large bin, it will be best to line the bin with two thicknesses of 2-in. lumber, placing one of the layers on an angle of 45 deg. This mode of construction will aid materially in resisting thrusts tending to overturn the bents such as are put upon them when a train load of cars passes over the bin and discharges its load.

It has already been stated that the bents should be secured by string courses through which at the proper points are passed tie rods to resist thrusts in vertical cross sections. These tie rods should always be placed just above the sill timbers and just below the cap timbers. At intermediate points the advantages of tie rods is greater, but they are in greater danger of being struck and bent by falling ore, and rods so deformed are of course of little value in strengthening the bin.

Before passing on to the design of the other members of the bin bents, there remains to consider the effect on the pressure of the walls of the bin due to loading and emptying the bin. There are no records of experiments with ore, or at least none with which I am familiar. There have, however, been some trials with grain. Thus J. A. Jamieson[1] experimented with a model bin with results shown in Fig. 13. The bin was square bottomed and provided with diaphragms at the bottom and at the side near the bottom. To transmit the pressure to a manometer the space back of the diaphragms was filled with water. The solid-line curves represent the side and bottom pressures in filling, and the broken lines, three in number, represent the pressures in emptying the bin. In tests of various kinds, which have been made by other investigators, with bins having the discharge opening at the center of the bottom, it has been found that the variations of pressure on either side or bottom vary so little with the standing pressures as to be almost negligible. The variation of side pressures in emptying hoppered grain bins with side discharge, indicate that some consideration should be given to this point in designing similar ore bins. With respect to the pressure on the front bent, which element of the design has so far been considered, it is evident from an inspection of the diagram that there is a relief of a part of the pressure in emptying the bin. The increase of pressure on the rear, as will be seen when this portion of the bin design is considered, is amply taken care of by the excess of strength of the rear posts of the bents, which, for symmetry, are made of the same dimensions as the front. In the tests with grain the flow was continuous and the discharge relatively faster than would be the case with a mill bin where not infrequently 24 hours will be necessary to draw it. Some of the front standing pressure is lost in giving motion to the grain and reaction of the dynamic pressure causes increased pressure on the rear. In the case of a hoppered bin the greatest pressure due to emptying the bin will fall upon the hoppered bottom and it must be the experience of many who have been about ore bins that when there is a sudden rush of ore to the gates after the ore has been "hung up," the heaviest vibration and feeling of shock seems to come entirely from the

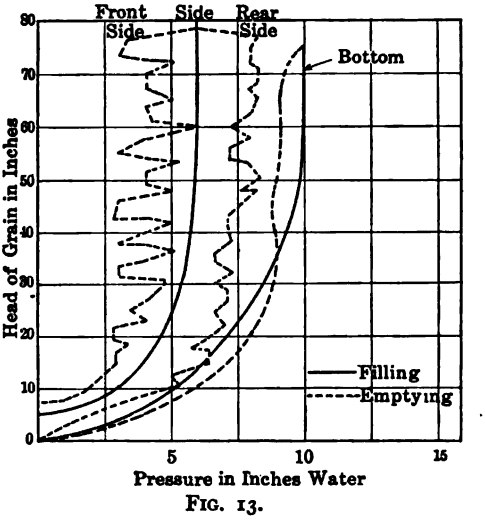

FIG. 13.

[1] Trans. Can. Soc. C. E., Vol. XVII.

bottom of the bin. In wooden-hoppered ore bins the change of pressure affecting the design of the sides due to emptying can be neglected.

In investigating the strength of the rear posts of the bents the thrusts to be resisted are those due to the weight of the ore from the top of the bin to the point where the hoppered bottom intersects the side of the bin and the thrust due to the hopper. Since the vertical height of the ore in the first case is 6 ft. we have for the unit pressure at right angles to the side of the bin at a depth of 6 ft., 200 lb. In this case, instead of using 45 deg. in the formula $6 \times 115 \frac{1-\sin \phi}{1+\sin \phi}$ the value recommended by Trautwine is adopted, 36 deg. 41 min. For a spacing of bents, 4 ft. apart the total pressure on a bent is one-half of $200 \times 6 \times 4$ or 2400 lb. Before considering the deflection caused by this load it will be better to estimate the effect of the thrust of the hopper and combine this effect with the first, and if the deflection indicated by this procedure is less than that of the front post, we need proceed no further as for symmetry the front and rear posts are made of the same size.

Bin Floors.—To determine the pressure on the inclined timber of the hopper we may proceed as follows: First find the vertical and horizontal pressures at the bottom of the hopper and the top. From the general equation of the ellipse with center at the origin, we can then determine the resultant pressure at the points under consideration. In each of these cases the semi-major axis of the ellipse is equal to the vertical pressure and the semi-minor axis is equal to the horizontal pressure. To find the resultant pressure at each point, substitute in the elliptical equation a value for x equal to the vertical pressure times $\sin (90^\circ - \alpha)$[1], where α is the angle made by the inclined bottom with the horizontal. This will give y. The resultant pressure is equal to $\sqrt{x^2 + y^2}$. Solving for the two cases we find that the resultant pressure over a square foot of area at the upper end of the inclined bottom is 507 lb., the vertical pressure at this point being 690 lb., and the horizontal pressure 200 lb., and at the lower part of the inclined bottom the resultant pressure is 1634 lb., the vertical and horizontal pressures being respectively 2300 lb., and 667 lb. In the case of a beam uniformly loaded and supported at the ends, but not fixed, bh^3 = to $\frac{5Wl^3}{32\,Ev}$. In this case l is not the length in inches in the inclined member, but the horizontal span in inches between supports. Solving this equation bh^3 is equal to 33,172 and a 12×14 timber is called for. Since the bottom timber is thoroughly braced a 12×12 timber is amply strong.

Design of Rear Posts.—Returning now to the consideration of the rear post, we have seen that the horizontal effect due to the weight of the ore is approximately equal to the effect of a uniformly distributed load of 2400 lb., or approximately equal to a single center load of five-eighths the uniform load, or 1500 lb. It remains now to consider the compressive stresses and

[1] In the case under consideration, $\sin (90^\circ - x)$ equals $\sin 45^\circ$.

bending produced in the rear post by the thrust of the inclined bottom. The total load on the bottom we have already found to be 14,939 lb. per bent. For all practical purposes this may be assumed as acting vertically since it is actually very nearly so, either at the top or bottom, and the angle of application of stress at the top of the inclined bottom measured from the vertical, is a little over 16 deg. The supports at each end of the inclined member must under the various assumptions bear one-half of the total loading or 7470 lb. Resolving this into two components, one acting along the inclined member and the other at right angles to it, and there is obtained 5281 lb. each. The effect of this thrust on the inclined member which has already been considered is so small that its effect in causing deflection may be disregarded. The deflection it will cause may be determined approximately as follows, the reasoning being faulty in that it is assumed that because in beam theory the deflection produced by a load is proportional to the deflection produced by the breaking load, there exists a likewise proportionality between the breaking load of any column and any other smaller load. Under this assumption, however, $v = \frac{2Pl^3}{f^2bh^2}$ whereas before b equals width of timber, h the depth and l the length in inches and f the breaking strength per square inch of the post which may be taken at 3000 lb.; and P, the load which has already been determined, viz., 5281 lb. Solving for v, we find that the deflection due to the end thrust of 5281 lb. is but 0.039 in. which as has already been stated, can be neglected.

Acting on the rear post, we have the uniform loading for a depth of 6 feet assumed to act at the center of this length, and amounting to 1500 lb. The thrust of the inclined timber is 5281 lb. at point of application, inclined at 45 deg. to the post. On resolving this into two components, one acting vertically in the long axis of this member and the other at right angles to it, we obtain for each, respectively, 3733 lb. The formula for the deflection of a beam loaded as this one is with a distributed load at the upper portion and a concentrated load is rather complicated. The deflection for the loads shown exceeds 1/300 of the span for a 12 × 12 timber, but with the proper rodding and bracing of the inclined timbers a 12 × 12 timber or a timber of the same size as the front one of the bent will be sufficiently strong for ordinary designs. Formulæ for deflection of beams, where a load is uniformly distributed over a portion of the beam and others are concentrated at various points of a beam, will be found in treatises on the Strength of Materials. Western engineers resort to the rules and tables for strength of beams given in Kidder's Architects' and Builders' Pocket Book. Kidder gives the modulus of elasticity of Oregon pine at 1,425,000. But as tests by Lanza[1] show that the deflection of a beam under long subtained load will average about twice the deflection under quick loading I use the value for the modulus given on page 67.

[1] Applied Mechanics, New York, John Wiley & Sons.

Stresses in Bins, Due to Live Loads.—The loads due to the timbers have not been considered in the preceding calculations nor has the question of the live load been entered into. With respect to the former, the engineer has to make a shrewd guess as to the probable size of the members as indicated by the computations and add such weights to the other loads, where this addition is needed. In the design of a wooden ore bin the stresses due to the weights of timbers are but a small percentage of those due to the ore to be supported and can, in most computations, be neglected; the only weight of timber which will be of much moment is the flooring of the bottom of the bin.

The live load may, however, be a matter of great moment. If the bin be filled by small 16-cu. ft. cars drawn by a horse, or an electric motor, the stresses they set up in the columns of the bin are not of much moment, though as a precaution they should be calculated. Where, however, the bin is filled by a load of ballast cars drawn by a locomotive, the live load becomes a matter of great importance and we may proceed to determine its effect in the manner already indicated, that is, from the point of view of the deflections produced in the vertical members by end loading. Where the bin is filled by 50-ton ballast cars the load over a single bent may reach 13,200 lb., or 6700 lb. per post. The locomotive hauling these cars will produce about the same strains as the cars, though they are not of the heaviest class. The method of attacking this problem would be to find the uniformly distributed load which would produce the same deflection as the end loading of 6700 lb., add this to the load produced by the ore and determine the size of timber which, under this combined loading, would not produce a deflection greater than 1/300 of the span. For heavy live loads such as the 50-ton ballast cars and locomotive mentioned, it will be best to materially increase the depth of the section, even though the computations show that only a comparatively small deflection is produced by end loading. We have determined that the posts should be of 12 × 12 section, and for a train of 50-ton cars they should be increased to 12 × 14, the next larger size of standard dimensioned lumber. The deflection produced in the cap timber of the bin by the live load can be considered an ordinary case of concentrated center loading and the necessary section determined from the deflection formula in this case, the beam being considered supported at the ends but not fixed.

The matter of designing a wooden bin has been gone into at some length, for the reason that this type of bin is almost invariably erected by "rule of thumb" and in a number of bins, which have come under my experience, there has been incipient failure which had to be remedied by extra bracing, use of additional tie rods, etc.

Steel Bins.—Steel bins are of two general types: Hoppered bins following closely the outlines of the types of wooden bin which have already been considered, and cylindrical bins. Of late years there has been a tendency to adopt a combination of cylindrical and hoppered types, attaining the

capacity of the former, while at the same time retaining some of the simplicity of design of the cylindrical type. In the combination type the plates are curved between the bents and the ends are circular. The design of hoppered bins may be considered in the same way as for wooden hoppered bins, or it may be considered as a problem in framed structures, the various members being considered as in tension or compression, depending upon the direction of stress in them as determined by the direction and loading considered as concentrated at the joints. Graphic methods are best for this work. In addition to these stresses there must further be considered the effect of the transverse loading in a manner already touched upon.

Cylindrical bins differ in the manner in which they are hoppered. In some cases the bins are outwardly but plain cylinders into which is built a plane inclined bottom, the ore being drawn out not at the bottom, but in the face of the bin at the bottom, regardless of the variation due to standing pressures when emptying. This is not as preferable a mode of hoppering as where the bottom of the bin is a cone.

The design of steel bins of any type should not be attempted by anyone not experienced in designing framed structures. It will be found best to entrust this task to the engineers of manufacturing plants who make a specialty of erecting steel structures. Of the various types of steel bins which have been mentioned, the cylindrical bins are the best as the theory of design upon which they are based is far simpler than with the case of hoppered bins with straight-line sections. It will already have been noticed that in treating the theory of wooden hoppered bins, continual approximations had to be resorted to in avoiding long and involved mathematical expressions and as in adopting such approximations values had to be chosen which erred on the safe side and a greater amount of structural material was indicated than was absolutely necessary. The same stricture would apply to the theory of design of straight-line hoppered steel bins and though it would seem that less structural material would be required of such a bin than a cylindrical one, such is not the case, not only for the reason already indicated but for the further reason that in the cylindrical bin the material can be better distributed to resist the stresses.[1]

One disadvantage which arises with cylindrical bins is the difficulty of drawing material from them when the gates are placed in the bottom. This is especially marked where the bin has a rounded or not sufficiently inclined bottom, making the angle of repose greater than it would be if the ore rested on a surface sufficiently inclined to allow it to slide freely. The mode in which ore settles toward the gates of a bin is indicated in the accompanying diagrams. In Fig. 14 the hoppers formed by the ore are indicated by solid lines showing the surface of rupture in two cases. On the left-hand figure

[1] For further information on steel bin design, reference should be made to "Wall Bins, and Elevators," by Milo S. Ketchum, published by McGraw Hill Book Company, Inc.

two adjoining gate openings are shown for a rectangular bin with regularly spaced openings. In the case of bins with openings in the side, at the bottom, the cones of discharge bounded by lines making the angle of the surface of rupture is reduced one-half its volume by the cone being split in half by the front wall of the bin. Where the gates are close together the cones intersect one another, leaving only a wedge of non-moving ore between gates. If the gates are very close together the ore moving toward the gates presents, to all intents and purposes, a long wedge of ore the front surface of which is bounded by the straight front of the bin and the straight sides and by a continuous plane in the rear which has an angle with the vertical equal to the angle of rupture. As the cones produced by the curved surfaces of rupture sink toward the gates, the ore along the base takes the angle of repose, as is shown in Fig. 14, or it slides down to a

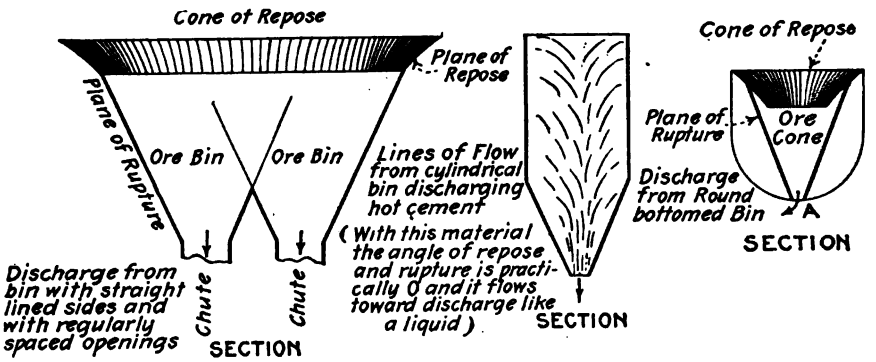

FIG. 14.

curved surface having an angle with the horizontal equal to the angle of repose. This action of quite subsidence in a hoppered bin is frequently interrupted by slides which have their origin along the hoppered bottom and which disturb the quiet settlement of the cones of rupture. In a general way it may be stated that the greater the angle of repose of material, the more apt the settling cones of rupture are apt to be disturbed by slides originating on the hoppered bottom. In the case of hoppered bins with opening at the side, there is great freedom of movement in a downward direction on the front or gate side of the bin; there is also the pressure toward the gate produced by the inclined bottom. In a circular bin, with conical bottom, there is great freedom of movement down the bin and through the conical bottom, but at the opening, owing to the large pieces of ore opposing one another at many opposite points, there is a tendency to jam or arch, unless the opening is made very large, and this should be three times the largest diameter of the largest piece for practical operations. If the cylindrical bin is made with a rounded bottom very serious stoppages are apt to occur, for, to all intents and purposes, the bin is a flat bottomed one and the only possible channel of

(Facing Page 74)

Fig. 15—Utah Cop

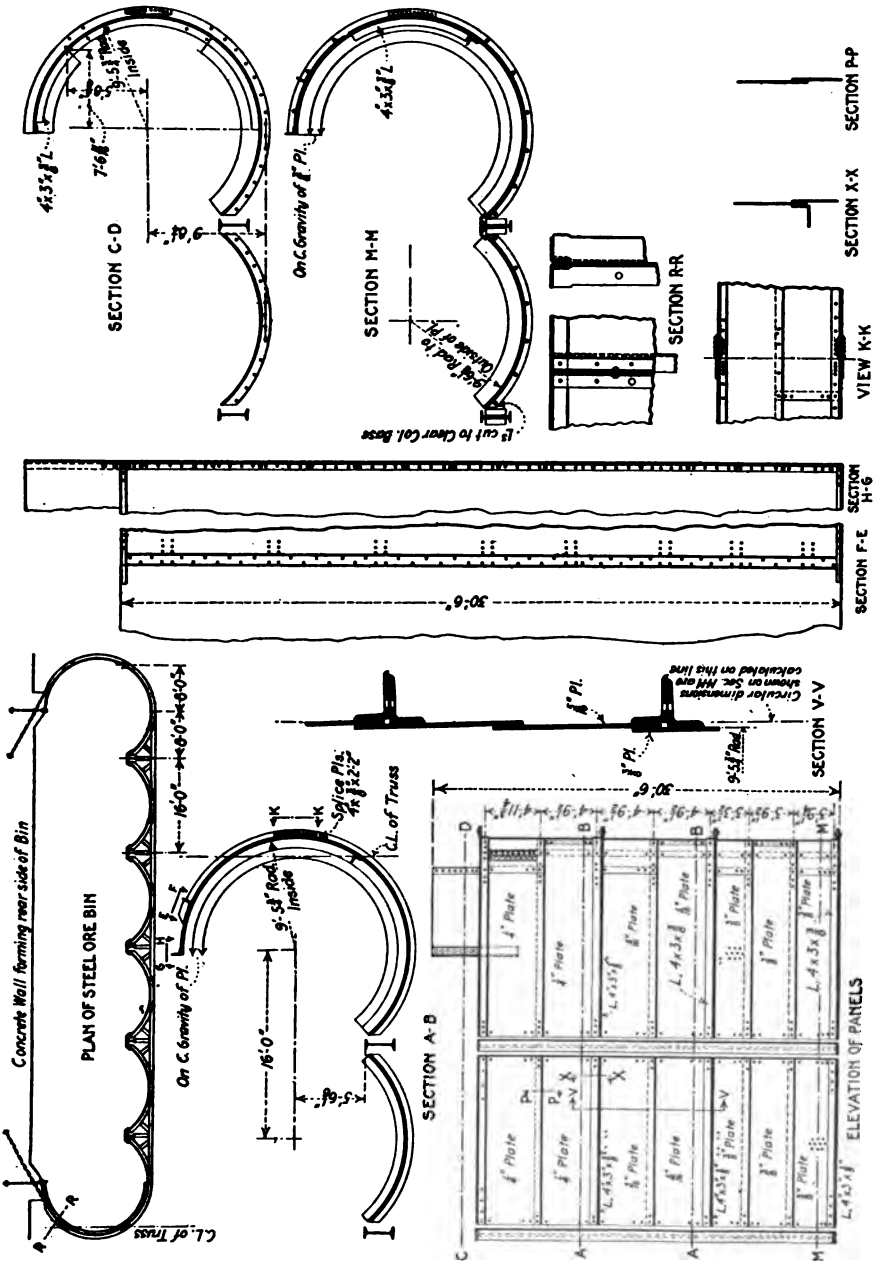

FIG. 16.—Cananea Cons. Copper Co.

movement is within the sharp pointed cone of rupture as the angle of repose, rock on rock, is high. Some drawings of steel bins are shown in Figs. 15 and 16. The devices for filling the bins and drawing the ore will be referred to later.

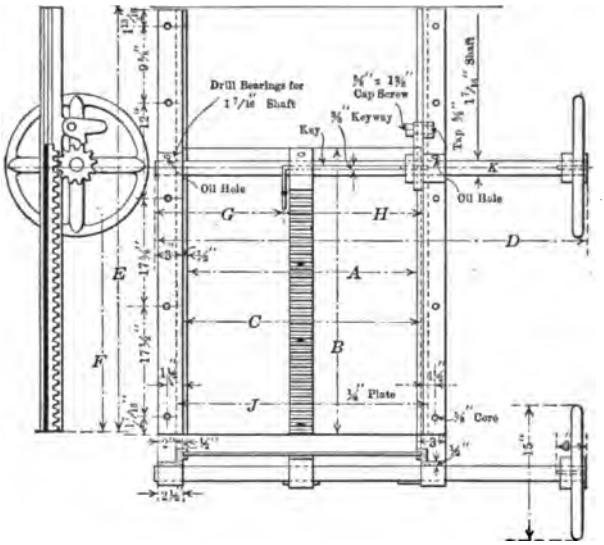

A	B	C	D	E	F	G	H	J
Clear opening	Length of plate	Width of plate	Total length of shaft	Length of guide	Height to shaft	Keyseat to end of shaft	Length of keyseat	Distance between timbers
18	18	18–3/4	39	30	16	10–1/2	11–1/2	20
18	24	18–3/4	39	40	22	10–1/2	11–1/2	20
18	30	18–3/4	39	50	28	10–1/2	11–1/2	20
24	24	24–3/4	45	40	22	12–1/2	13–1/2	26
24	30	24–3/4	45	50	28	12–1/2	13/1–2	26
24	36	24–3/4	45	60	34	12–1/2	13–1/2	26
30	30	30–3/4	51	50	28	16–1/2	17–1/2	32
30	36	30–3/4	51	60	34	16–1/2	17–1/2	32

LIST OF MATERIAL

1	15″ Hand wheel, cast iron.	1	Plate steel slide.
1	Ratchet wheel, cast iron.	1	Shaft.
1	Pawl, cast iron.	3	Keys.
1	Pinion, cast iron.	1	5/8 × 1–3/4″ cap screw
1	Rack, cast iron.	8	1/2″ × 4″ lag screw.
2	Guides, cast iron.	1	1–7/16″ collar.

FIG. 17.

Bin Accessories.—The mine, or receiving bin ot a mill, is filled by small cars pushed by hand, trolley or steam train. To protect the cap timbers, or I-beams, from wear, they should be armored with chilled castings pointed

[1] The F. M. Davis Iron Works Co.

at top and pierced with holes through which to pass lag screws or bolts sunk into or passing through the cap timbers or I-beams laterally. The bottom of the bin should be lined with sheet iron which should be inspected periodically to see that it has not become loose, as a derelict liner at a gate makes a most troublesome and exasperating obstruction. Where rails are laid across the top of the bin, two or more longitudinal stringers must be run to support the ties. For coping with zero weather and wet ore a steam line should be run to the top of the bin and connections made to it for hose lines for introducing steam at the bottom of the cars to thaw the ore or keep it from freezing while standing over the bin. A light shed over the top is an advantage in cold climates in protecting the bin and contents from rain, snow and frost.

Bin Gates.—To aid in drawing the ore from the bottom of bins, they are equipped with various devices called gates. The proper type of gate to employ will vary with the style of bin. For hoppered bins with straight-line sections, the opening being at the front of the bin, rack and pinion gates are widely used. Standard dimensions for these gates are shown in Fig. 17. When not actuated by power appliances, these gates will often jam so that it is impossible to open them without injury. In power actuated gates, the rack and pinion are omitted, the gate being merely secured by slides and at the top to the piston of an air driven plunger. In addition to the disadvantage of jamming, the constant impact of ore on the plate forming the closing surface, inevitably bends it to an extent making it difficult to keep it in the slides at either side. If the gate should come loose with the bin full of ore, nothing can be done toward putting it back in place until the bin is empty, or very nearly empty. The principal advantages of the rack and pinion gate are cheapness, definite rate of flow, depending on the height raised; and since it is secured directly to the bin it occasions no loss of forward or head room, as do other types of gate which have to be secured to a spout. The rack and pinion gate finds greatest application where the ore is allowed to flow continuously from the bin openings. Placed directly on the bin it receives the full pressure of the ore.

The first or receiving bin gates will require attendants, for the reason that if the gates be made with sufficiently large openings to secure continuous flow of run-of-mine ore, the discharge would be too great (discharge from a circular opening varies as the cube of the diameter for equal heads of ore) and with smaller openings the flow of ore is constantly arrested by jams at the gates, which have to be loosened by a bar in the hands of an attendant. Where the ore from the receiving bin is taken away by a belt conveyor an attendant is necessary to secure even feeding. Where rack and pinion gates are employed above a conveyor belt the gate is raised more or less, depending upon the rate of feed desired, and only opened wide when a jam occurs, and to prevent it from rushing out at too great a rate the attendant holds it back with a shovel, bar or rake, or with a chute board, which is merely a board resting against two cleats fastened to the side of the chute, and as there is very

little or no pressure of the ore in the chute, *below* the gate, little or no difficulty arises in controlling the flow of ore.

For intermittent flow, as in filling cars, the undercut gates are best. Circular gates of this type are illustrated in Figs. 18 and 19. The principle of

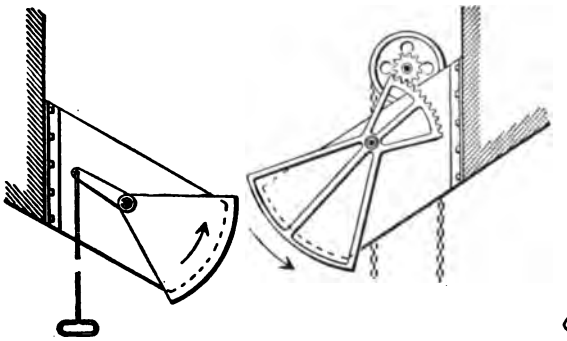

FIG. 18.

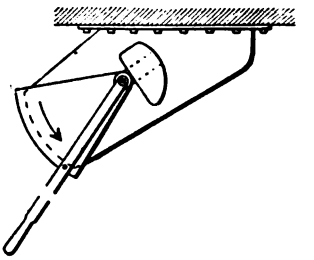

FIG. 19.

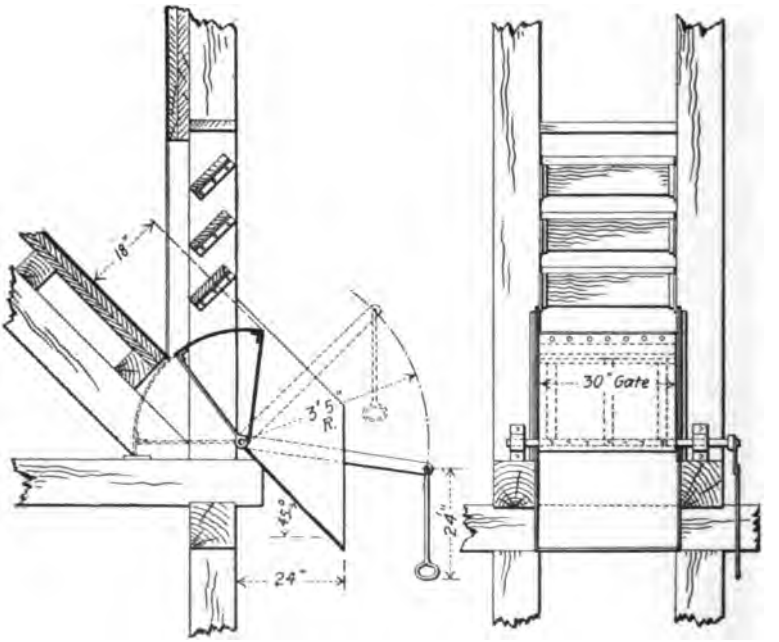

FIG. 20.

the gate of Fig. 20 is shown in Fig. 21. To open this gate a hand wheel or lever is turned clockwise while facing it. In the wide open position the steel surface *abcd* forms a portion of the bottom of the chute which is cut out so as to allow it to be depressed. When the gate is closed the gate is in the position shown in the diagram, *afde* being a curved surface against which the ore in the chute

presses and of radius *cd* or *ab*, the center of the arc being the axis of the hand wheel rod. For openings in the bottom of a bin such as are to be found in circular steel bins, or double hoppered wooden or steel bins, gates of the type shown in Fig. 22 can be used where the bin is drawn by filling cars. If a conveyor belt is run under the bottom of the bin, it will be necessary to have a spout pointing toward the conveyor in the direction of its motion. At the Utah Copper Company's plant (formerly the Boston Consolidated Copper Mining Company), the drawing device consists of a short length of conveyor made of hinged steel flights and is placed under the hoppers of the bin bottom. By a gate in the hopper, a more or less heavy stream is caused to flow onto the conveyor from the end of which it drops into cars, see Fig. 15. This type of drawing device is becoming popular for continuous feeding, for all sizes of dry ore.[1]

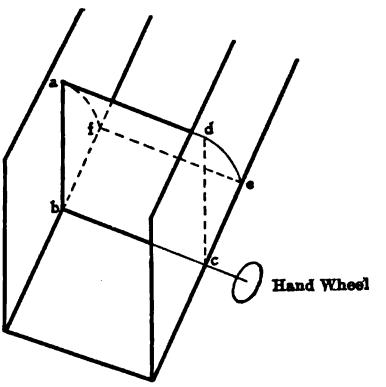

FIG. 21.

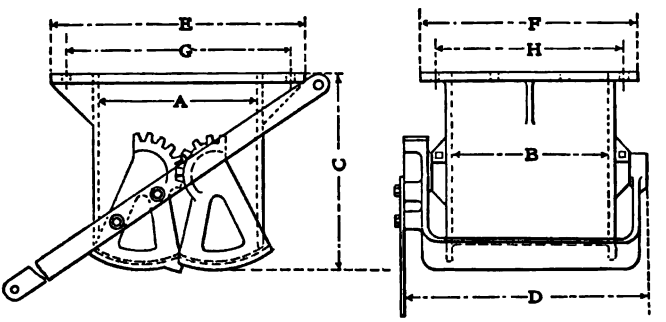

Size, in.		Dimensions in in.						Weight, lb.
A	B	C	D	E	F	G	H	
12	12	14–1/2	19–5/8	18	18	15	15	220
12	16	14–1/2	23–5/8	18	22	15	19	250
12	18	14–1/2	25–5/8	18	24	15	21	275
16	16	20	25	26–1/2	19	23	13	400
18	18	20	27	28–1/2	21	25	15	500

FIG. 22.

Conveyers.—Conveyers can, for convenience, be divided into two classes (1) Belt conveyers, the belt being most commonly a rubber belt; (2) all forms of push or drag conveyers, this class being relatively unimportant. Rubber

[1] Figs. 18, 19 and 22, S.-A. Mfg. Co.; Fig. 20, Stearns Roger Mfg. Co.

belt conveyers are flat or troughed. Flat conveyer belts often have a shallow lip of rubber at either edge, or a series of flights secured to either edge as shown in Fig. 23, the object in either case being to prevent material from spilling over the sides. The troughed belt is more commonly used, it being supposed that the disadvantages of this type are more than offset by its greater capacity and prevention of spillage in loading and conveying. With respect to the first point, theory does not bear out the assumptions fully unless taken in connection with the second having to do with spillage. The angle at which the troughing idlers are placed is commonly 20 deg. or 30 deg. and for special problems, 45-deg. troughing idlers are employed. If it is assumed that the troughing idlers and bottom idlers cause the belt to assume

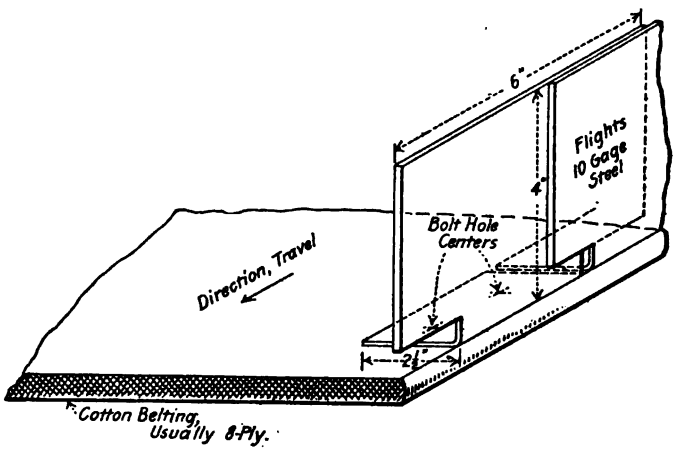

FIG. 23.

a circular curve and that the diameter of the circle of which the belt forms an arc is equal to five times the depth of the segment formed by the belt, there can be derived the following expression for the cross section of the maximum load which the belt will carry or when it is filled up to the two planes of repose which intersect one another at a point above the center of the belt and terminate at the two edges of the belt. The expression for cross section area of a trough is $0.14l^2 + 0.11l^2 \tan \phi$, where l is the width of the belt as it would be if flattened and ϕ the angle of repose. Now for a flat belt of width l the expression for cross section is $0.25\ l^2 \tan \phi$. These expressions become equal to one another when $\tan \phi$ equals 1, or when the angle of repose is 45 deg. It must be evident that when the angle of repose is greater than 45 deg. the flat belt has greater theoretical capacity than the troughed, and below this angle the troughed belt has the greater capacity. When the angle of repose is zero the flat belt has no theoretical capacity while the troughed one still has a capacity of which $0.14l^2$ is the measure. With coarse material the choice between a troughed belt and a flat belt should rather lean to the former

not only for the reason stated, but for the additional reason that this kind of material is not so fluid as finer and hence would not be so likely to run over the edge of the belt in loading. In ordinary cases of conveying the flat belt will require greater width for the same capacity, but no rule can be laid down for the excess width required. Where the ore is very fine, or not fed in the most advantageous way or at a uniform rate, a flat belt 25 to 30 per cent. in excess of width of the troughed belt may be necessary to perform the same service as the latter, but with coarse material fed to the belt properly the flat belt need be little or at all wider than a troughed one. The most advantageous method of feeding conveyer belts is to slide the ore upon the belt in its center and with flat belts in as narrow a stream as possible and in the direction of motion, having it reach the belt at, or as nearly at, the same rate of speed as traveled by the belt. This prevents undue wear and reduces to a minimum the spreading of the ore at the points where it is fed on the belt. The minimum slope at which it is possible to elevate ore or other material on a belt conveyer is usually given at 23 deg. At this limiting angle the ore must be fed continuously, be not too dry or excessively fine. If the ore is wet and coarse, and is fed in a heavy stream, it can be made to go up a steeper slope than 23 deg. Finely ground ore containing much sand and powder will roll back to an appreciable extent on a slope of 23 deg., especially if the motion is not steady but vibratory or swinging. Under these conditions the limiting angle of slope is 16 deg. and for this kind of material with steady travel about 18 deg. Flat belts cannot be carried up so steep a slope as troughed belts.

In any conveyer belt installation the following points should be observed. The head and tail pulleys should be at least of a diameter equal to the width of the belt and project beyond the edge of the belt an inch on either side. There should always be take-up bearings at the lower end of the conveyer the range of which is 1 ft. per 100 ft. of belt. For coarse ore and heavy loads, the top idlers should be spaced not less than 2–3/4 ft. apart, but for light loads this space may be increased up to 5 ft. apart as a maximum. The bottom or return idlers may be spaced from 7 to 12 ft. apart, depending on the weight of the belt. Supports for idlers should be carried on stringers supported by posts spaced at a distance equal to the spacing of the return idlers, the idlers resting directly on cross pieces placed across the stringers. The cross pieces at the posts are secured to them and support the return idlers as well as the top idlers. The posts are so placed as to bring the lower idlers between the posts, the spacing of the latter being equal to the spacing of the lower idlers. The framing should be as light as is consistent with proper strength, and thus afford unobstructed view of the idlers. If the framing consists of too many members it will be difficult to get at the idlers for repairs and should they stop, owing to neglect of lubrication or choking of the bearings with dirt, the pulleys will be ruined by being worn flat. None of the take-up bearings which are shown in the catalogues are satisfactory for long heavy belts, for two reasons: (1) That with the usual type requiring a

monkey wrench for turning the screw bolt, a sufficiently great leverage cannot safely be obtained which will tighten a loose belt, and (2) that the take-ups being individual it is difficult to take up slack evenly on both sides, and where there is an eccentric loading on one of the screw bolts a great exertion of power is required to turn it. The screw bolts should either screw through or be secured to two worm wheels turned by a worm shaft on which are cut two worms for the two worm wheels at either side. The worm shaft should be turned by a bar and ratchet device placed on one side. The take-up mechanism should be secure to a U-frame between the arms of which would be the take-up pulley.

For flat belts cylindrical idlers are all that are required which in inferior constructions are made of wood with steel pins to serve as journals, or of pipe filled in at the ends with wood or metal, the journal pins being secured by driving them into holes made to receive them. For better work wide faced pulleys are used, or a number of small pulleys mounted on a single shaft.

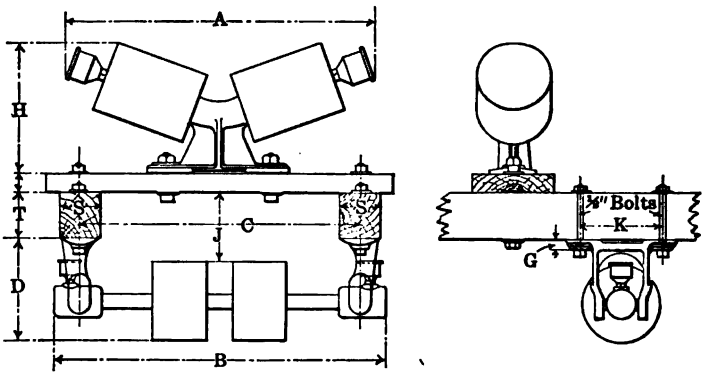

DIMENSIONS

Width of belt, in.	A in.	B in.	C in.	D in.	G in.	H in.	J in.	K in.	S in.	T in.	Weight	
											Carrier	Return roller
12	24	25	21	7-3/4	5/8	11-1/2	5-3/4	6-1/8	4	4	46	36
14	24	27	23	7-3/4	5/8	11-1/2	5-3/4	6-1/8	4	4	47	37
16	27-1/2	29	25	7-3/4	5/8	12-1/4	5-3/4	6-1/8	4	4	52	44
18	27-1/2	31	27	7-3/4	5/8	12-1/4	5-3/4	6-1/8	4	4	53	45

FIG. 24.

Grease introduced by simple pressure cups makes the best lubricant for conveyer idlers. For troughed belts the stands for supporting the idlers are of many forms as can be seen by consulting the catalogues of manufacturers of conveying machinery. For narrow belts two idlers rotating on inclined shafts fixed to a cast-iron central post and with grease cups fixed in the end of the shafts, makes a good and simple choice. (See Fig. 24.) Where the belt is of sufficient width to warrant center-top idlers these should be arranged in front of the inclined idlers and with their tops forming a plane

higher than the plane formed by the inner lower edges of the inclined pulleys. Where this is not done there is a tendency for the belt to chafe on the edges of the inclined pulleys.

In a troughed belt the impact and rubbing of the ore wears the face of the belt as well as in the region where it is bent by the troughing idlers. To obviate this it has been proposed to have a fewer number of plies at this point, there being a greater percentage of rubber here than in the center or at

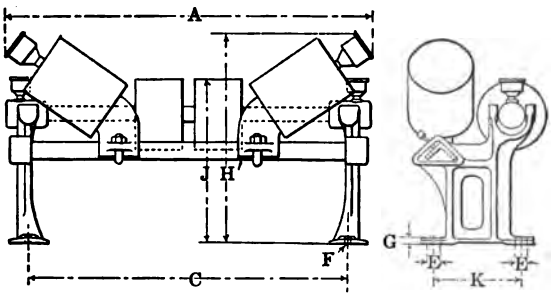

DIMENSIONS

Width of belt, in.	A in.	C in.	E in.	F bolts, in.	G in.	H in.	J in.	K in.	Weight, lb.
12	27-3/4	21	1	1/2	5/8	19-1/4	14-3/4	7-3/4	100
14	29-3/4	23	1	1/2	5/8	19-1/4	14-3/4	7-3/4	108
16	31	25	1	1/2	5/8	19-1/4	14-3/4	7-3/4	110
18	32	27	1	1/2	5/8	19-1/4	14-3/4	7-3/4	112
20	33	29	1	1/2	5/8	19-1/4	14-3/4	7 3/4	114
22	35	31	1	1/2	5/8	19-1/4	14-3/4	7-3/4	125
24	37	33	1	1/2	5/8	19-1/4	14-3/4	7-3/4	127
26	39	35	1	1/2	5/8	19-1/4	14-3/4	7-3/4	129
28	41	37	1	1/2	5/8	19-1/4	14-3/4	7-3/4	138
30	43	39	1	1/2	5/8	19-1/4	14-3/4	7-3/4	140
32	45	41	1	1/2	5/8	19-1/4	14-3/4	7-3/4	142
34	47	43	1	1/2	5/8	19-1/4	14-3/4	7-3/4	150
36	49	45	1	1/2	5/8	19-1/4	14-3/4	7 3/4	152

FIG. 25.

the sides. This can scarcely be considered an advantage for while the cotton plies hold the rubber and reduce its elasticity, it is the bending caused by swelling out between idlers and bowing in as the belt passes over them which causes the rubber to crack very much in the way that one can break a rubber eraser by bending it back and forth, and this effect increases with use since rubber loses its elasticity with age and flexure.

When it is necessary to remove a section of a conveyer belt, belt clamps should be applied and the belt drawn up with chain blocks mounted one on either side of the belt and secured to the clamps by steel eyes. After the slack is cut out a covering piece of new belt can be cut and punched for elevator

FIG. 15—Utah Cop

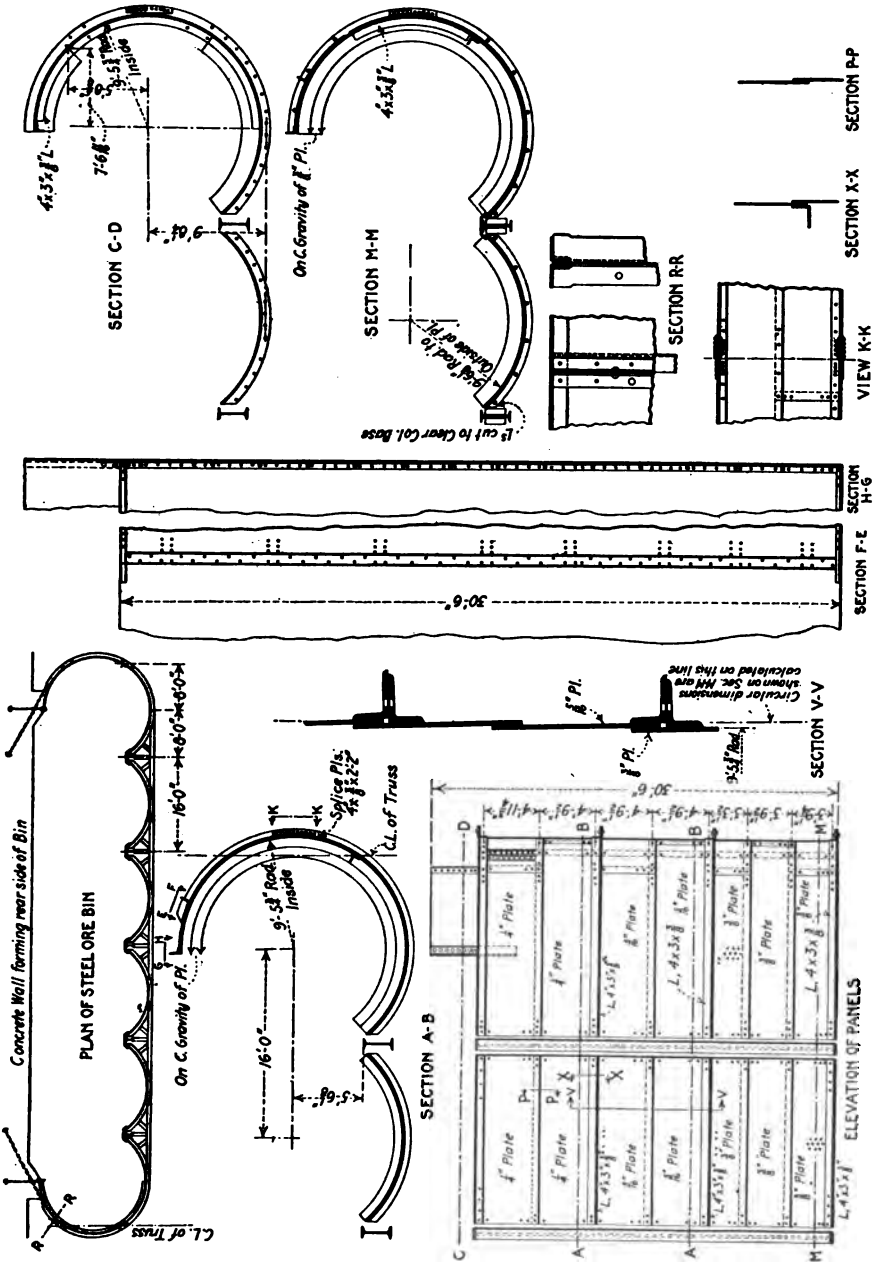

FIG. 16.—Cananea Cons. Copper Co.

125 ft. per minute, 50 to 100 ft. being the usual rate of travel. This type of conveyor or the kind where the hinged flat flights of the apron conveyer are replaced by buckets or pans secured to the roller chain, are useful in con-

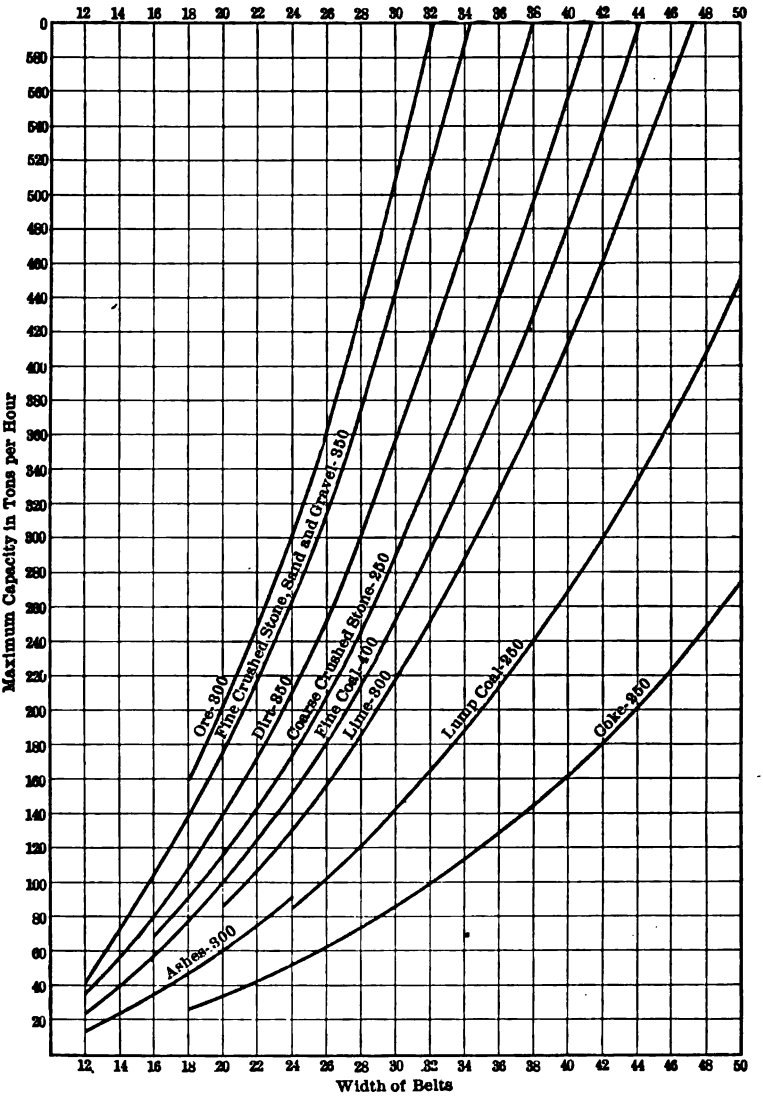

FIG. 27.

veying hot ores after they have been roasted or heated to dryness. For the same service flight or push conveyers are often employed. In the first, the ore is dragged along a fixed spout by the flights secured to roller chains or wire ropes. In the simplest form the flights are circular discs through the

center of which pass the conveying rope, the spout having a V-shaped section. Parenthetically it may be stated that where small streams of fine ore must be moved from one point to a near adjacent point some form of

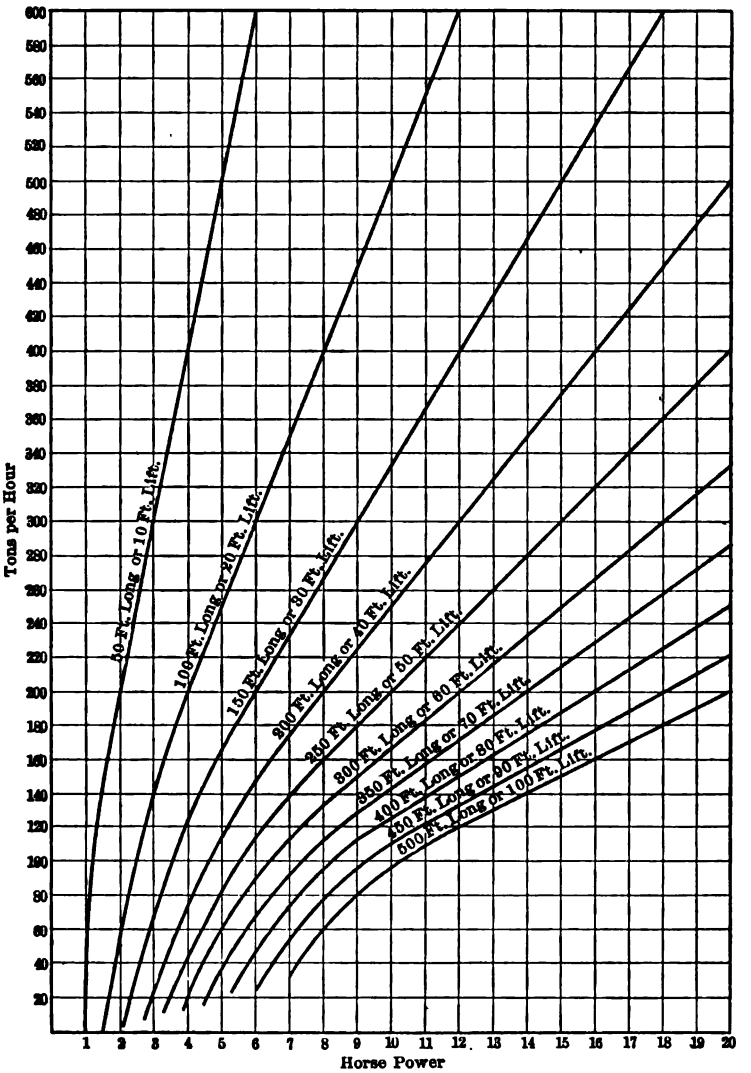

FIG. 28.

drag conveyer will be found highly preferable to a belt conveyer, being cheaper to install and the upkeep being practically nil. In the push conveyers lever arms push the steel flights ahead and force the ore forward; on the backward movement the flight is lifted up and passes over the ore. Screw convey-

ers are seldom used in mill work other than short ones for a few feet of length for conveying material from one part of a concentrating machine to another.

The use of conveyers for raising material should only be considered when the problem is to carry material forward as well as upward for in this case an inclined conveyer may well replace an elevator and a horizontal conveyer, but where conditions are such that a very nearly vertical lift will transport ore from a lower to a higher point, substitution of a conveyer for an elevator is an absurd performance, for in point of first cost, cost of maintenance and power the comparisons are entirely in favor of the bucket elevator unless enormous capacity is required.

Distribution of Ore in Receiving Bins.—Conveyers have been described and taken up as connecting machines between the mine ore, or receiving bin, and the fine ore bin. If the main mill building be of such capacity that the

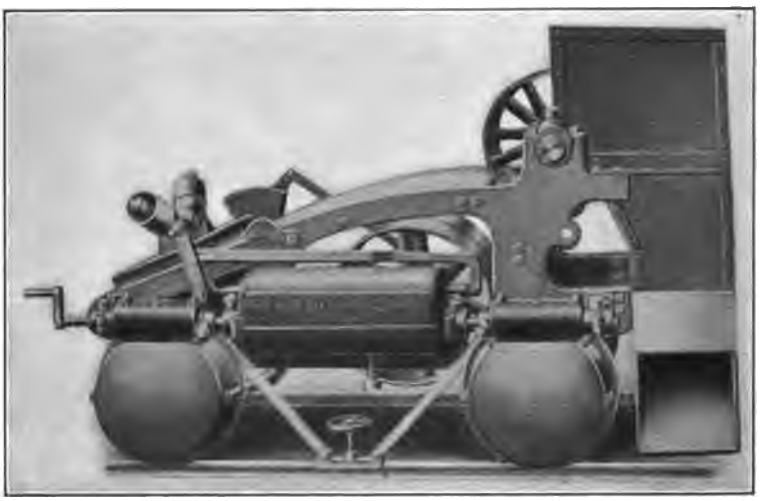

FIG. 29.

milling is done in a collection of units, each completely equipped with machinery then a long fine-ore bin occupying the whole width of the main mill building must be installed to serve the different units. Under these circumstances it will be best to continue the conveyer up a slope and along the top of the ore bin, using a belt tripper for distributing the ore. A drawing of a self-propelling tripper which automatically reverses itself at any desired point is shown in Fig. 29. In the case of a long bin the tripper would reverse at either end of the bin. If the bin be short it will be best to terminate the conveyer belt at the boot of an elevator which will discharge at one point over the top of the bin. The ore by this time being more or less finely crushed variations in feeding as to sizing test will not be very marked. The lack of variation in sizing test in the receiving bin is a point

well worth securing and one which accords well with the principle of separating the crushing plant from the separating plant. Where a long receiving bin is filled by cars of the gondola type which would be the common mode of operations on any scale the arrangement of the ore deposited in the bin from the cars is shown in the diagram, Fig. 30. It is not quite true as indicated in the diagram that the ore forms pointed piles when dropped from bottom opening cars, the successive piles actually leaving chisel pointed tops, but for illustration it may be assumed that pointed piles form; they are very nearly pointed. Regardless, however, of how the ore is distributed as to size in the cars, there will be a separation of fine and coarse in the manner indicated by the diagram, in which each more or less conical pile indicates a carload of ore. The coarse ore tends to run to the edges of piles

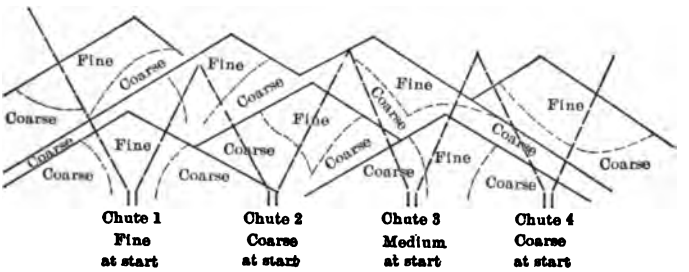

FIG. 30.

and the fine to remain in the center. Now at chute No. 1 at the left, on starting to draw, the ore will run quite fine whereas at chute No. 2 it will run coarse. At Chute No. 3 although at the start of operations the coarse ore will run, it will speedily be mixed with fine and has been marked as medium. Chute No. 4 has been marked as coarse but will quickly get into the fine zone. The long-dot lines indicate the planes of rupture and it must be evident that the character of the ore flowing from the chutes is constantly varying in point of size. Where a number of chutes discharge on to a conveyor belt leading to the crushing machinery the ore will discharge into the first crushing machine thoroughly mixed, for it consists of a series of layers of varying degrees of coarseness and fineness. In passage through the crushing machines the variation of size is diminished further so that the ore arriving at the fine ore bin is very uniform in character. If the ore be spread in the fine ore bin by a tripping device it will be more thoroughly mixed than it was before. If the fine ore be fed to the bin at a single point the tendency to separate into coarse at the edges of the bin and fine in the center will still persist to a certain extent but not to one which will have any appreciable effect on the subsequent milling operations. In small or single-unit mills the ore from the mine is dumped in at the center of a short bin, from the bottom of which it is fed by a single gate to the largest crusher. In this mode of operating it is inevitable that there will be a pipe of fine ore in the center of the bin if

it be filled at one or more periods during the 24 hours, the bin being completely emptied between such filling periods. Under this condition it must be evident that after the bin is filled the crushers will run for a considerable period on fine ore which will be succeeded by coarse ore when the ore in the bin is well drawn out. If the ore has to be further crushed and to a very fine state before any separating operations are performed little harm will be done by variations in the size of the feed but if the limiting size of the crushing is above 1/4 in. heavy losses will occur at certain periods of the 24 hours on the coarse separating machines and at opposite periods on the fine separating machines owing to their being overburdened unless the ore goes to a mill bin for bedding placed between the separating and unlocking machinery.

Where a long bin must be fed from a central point by a central flow at right angles to the long axis of the bin, the mode of distributing and bedding adopted at the Gold Prince mill may be used with advantage. The scheme is shown in Figs. 31 and 32. Fig. 31 shows a plan of the traveling belt conveyor 89 ft. 6 in. long, the battery bin and the two elevator heads indicated in the center of the figure. When the belt which is mounted on a long movable frame supported on a track is at the extreme position at either end of the bin it is reversed in the direction of its movement and at the same time the movement of the carriage or movable frame is reversed. The belt then begins to feed in the center of the bin and as the carriage returns in its reverse movement the belt distributes the ore along the other half of the bin until the carriage reaches the extreme position when belt and carriage are again reversed in movement. No matter what the position of the carriage and belt is, there is still a portion of the belt under the receiver of the elevator. Fig. 32 shows the driving mechanism.

Feeders.—From the fine-ore bins the ore must flow continuously and to secure steady delivery feeders of various kinds are used, the most common types being plunger and pan feeders, drawings of which are shown respectively in Figs. 34 and 35. These are so simple in arrangement as to need no explanation. The plunger feeders are more commonly used than other types. These devices are also much used for dry feeding crushing machines.

At the Bunker Hill mill and other western mills the plunger feeders are connected by a chain to a Bristol speed recorder which at every stroke makes a mark on the clock chart. If the feeder is not in operation the pen of the recorder merely marks an arc of the zero circle. With this recorder indisputable evidence of the time the feeder is in operation is furnished and from it also an idea of the rate of feeding can be obtained.

At the Independence mill at Cripple Creek, Philip Argall has installed a feeding device on the bins which receive ore crushed to 3-in. size. These are illustrated in Figs. 36 and 37, and are an extension of the idea of the Challenge feeder. To relieve the pressure on the feeding mechanism the ore is first received in hoppers from the bottom openings of the cylindrical bins. Two modes of regulation are provided for. On raising the ring at

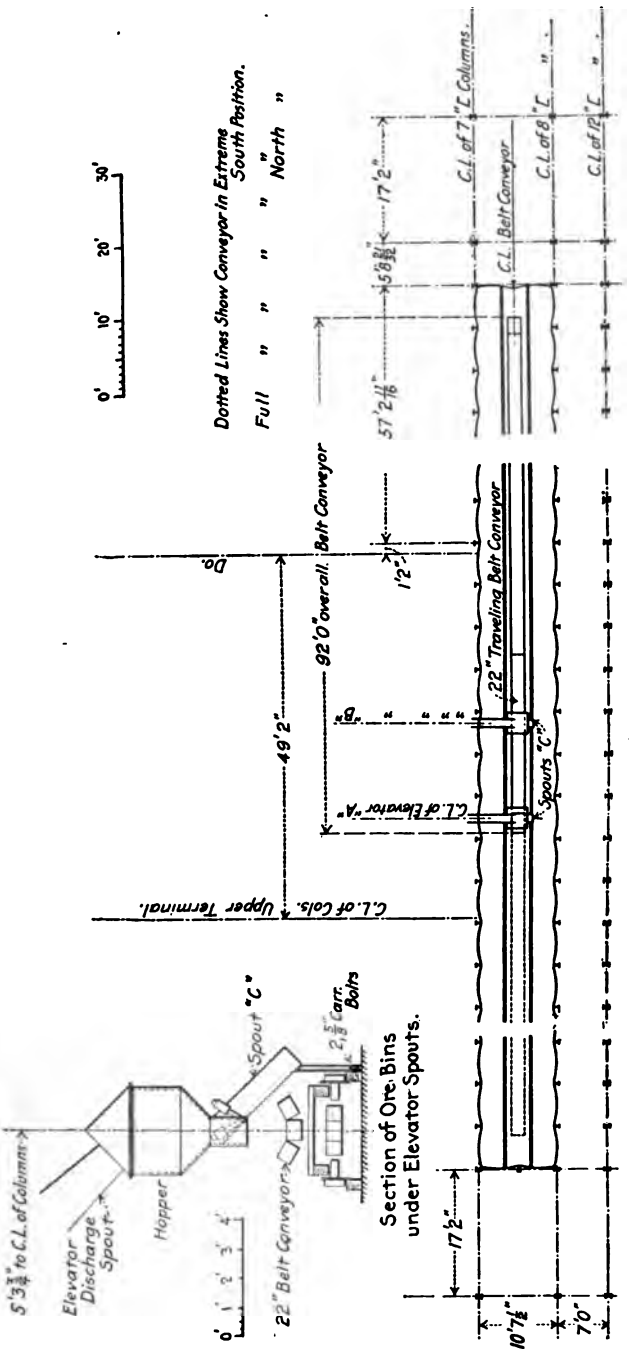

Section of Ore Bins under Elevator Spouts.

Plan of Battery Ore Bins.

FIG. 31.

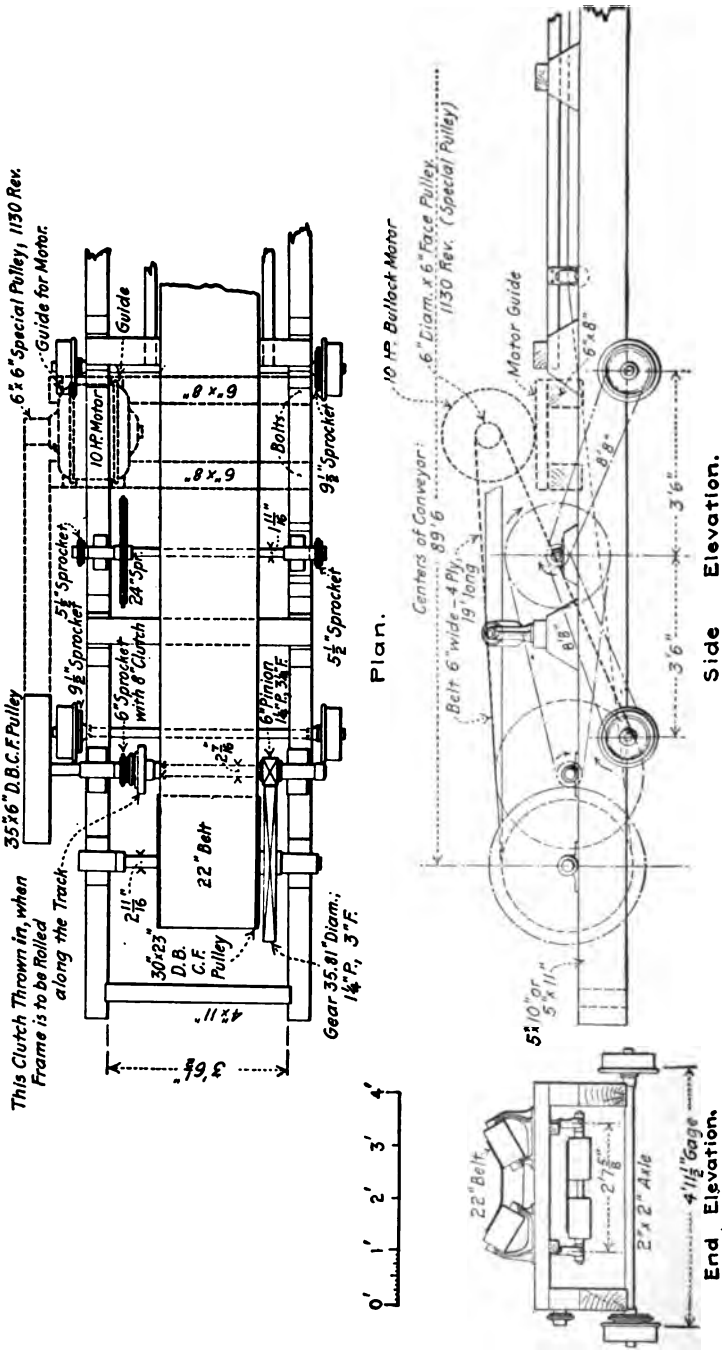
6"x6" Special Pulley, 1130 Rev.
Guide for Motor.
Guide
10 H.P. Motor
6"x8"
6"x8"
Bolts
9½" Sprocket
5½" Sprocket
24" Spr.
5½" Sprocket
9½" Sprocket
6" Sprocket with 8" Clutch
6" Pinion 1¼" P., 3¼" F.
35"x6" D.B.C.F. Pulley
This Clutch Thrown in, when Frame is to be Rolled along the Track
22" Belt
30"x23" D.B. C.F. Pulley
Gear 35.81" Diam.; 1¼" P., 3" F.
4"x11"
3'6½"
Plan.
10 H.P. Bullock Motor
6" Diam. x 6" Face Pulley. 1130 Rev. (Special Pulley)
Motor Guide
6"x8"
Centers of Conveyor: 89'6
Belt 6" wide - 4 Ply, 19' long
8'8"
3'6"
3'6"
5"x10" or 5"x11"
Side Elevation.
22" Belt
2"x2" Axle
4'11½" Gage
End Elevation.
0' 1' 2' 3' 4'

FIG. 32.

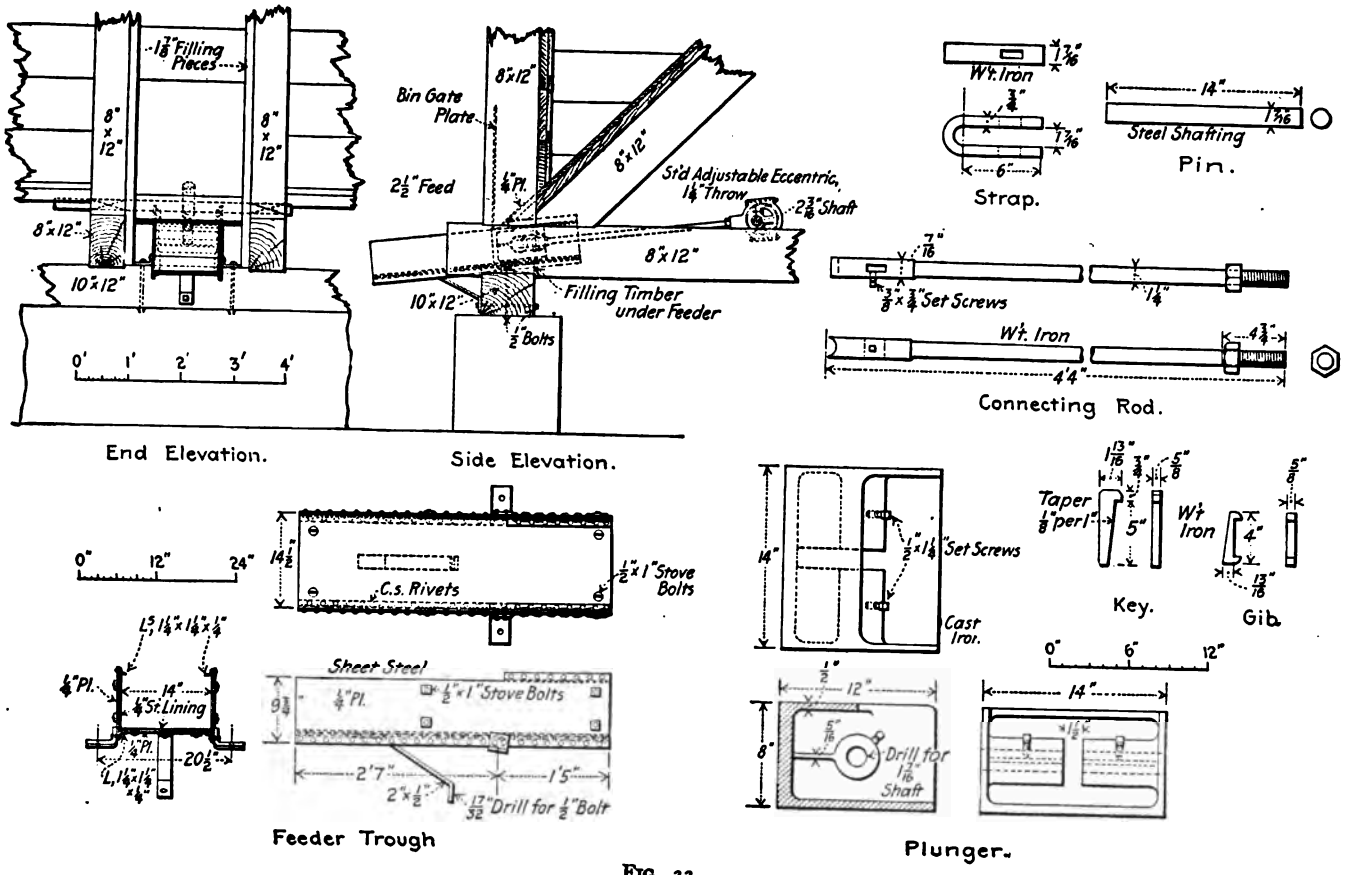
End Elevation.
Side Elevation.
Strap.
Pin.
Connecting Rod.
Key.
Gib.
Feeder Trough
Plunger.

FIG. 33.

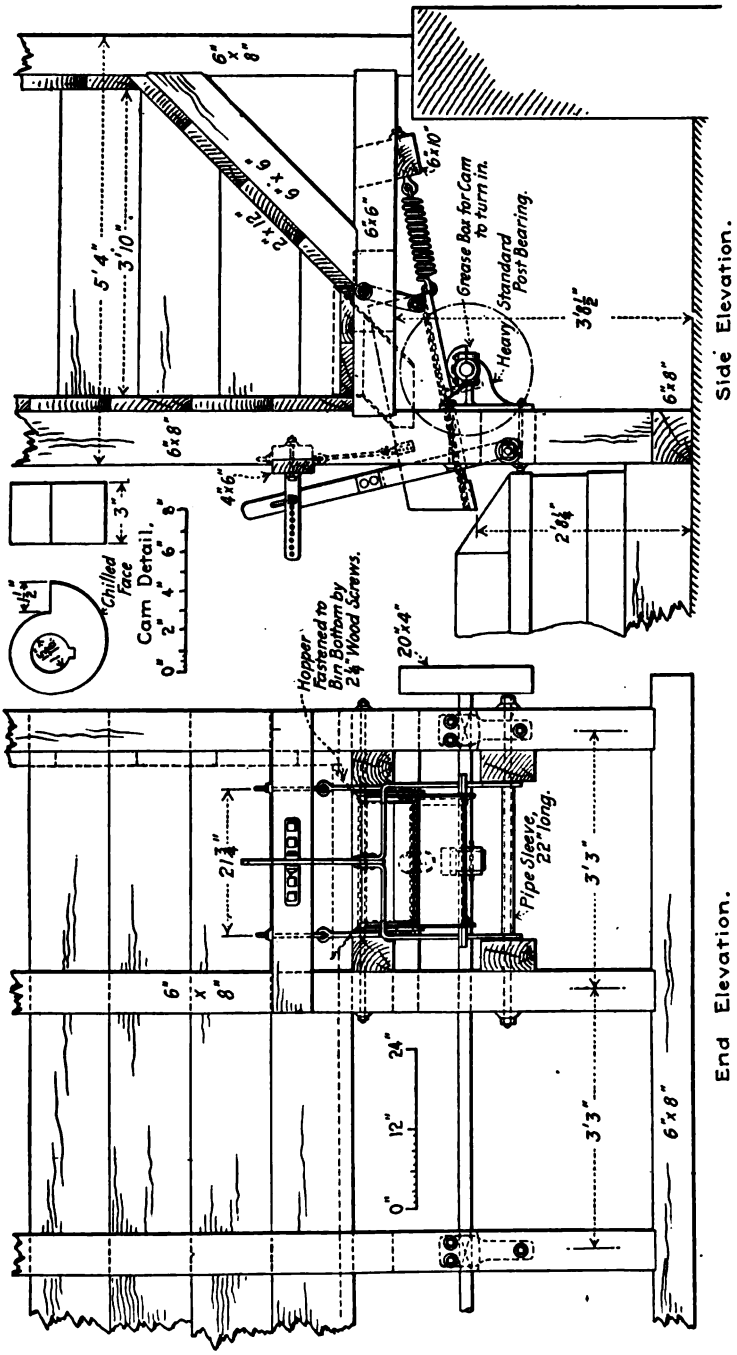
Side Elevation.
End Elevation.
Cam Detail.
Chilled Face
Hopper Fastened to Bin Bottom by 2½ Wood Screws.
Pipe Sleeve, 22" long.
Grease Bar for Cam to turn in.
Heavy Standard Post Bearing.
Spring
3" Diam.
12"
Suspending Bar.
Drilled for ¾" Rods
1" thick, Iron
Suspending Link.
W¹ Iron
Drilled for ⅝" Rivers
⅝" thick

FIG. 34.

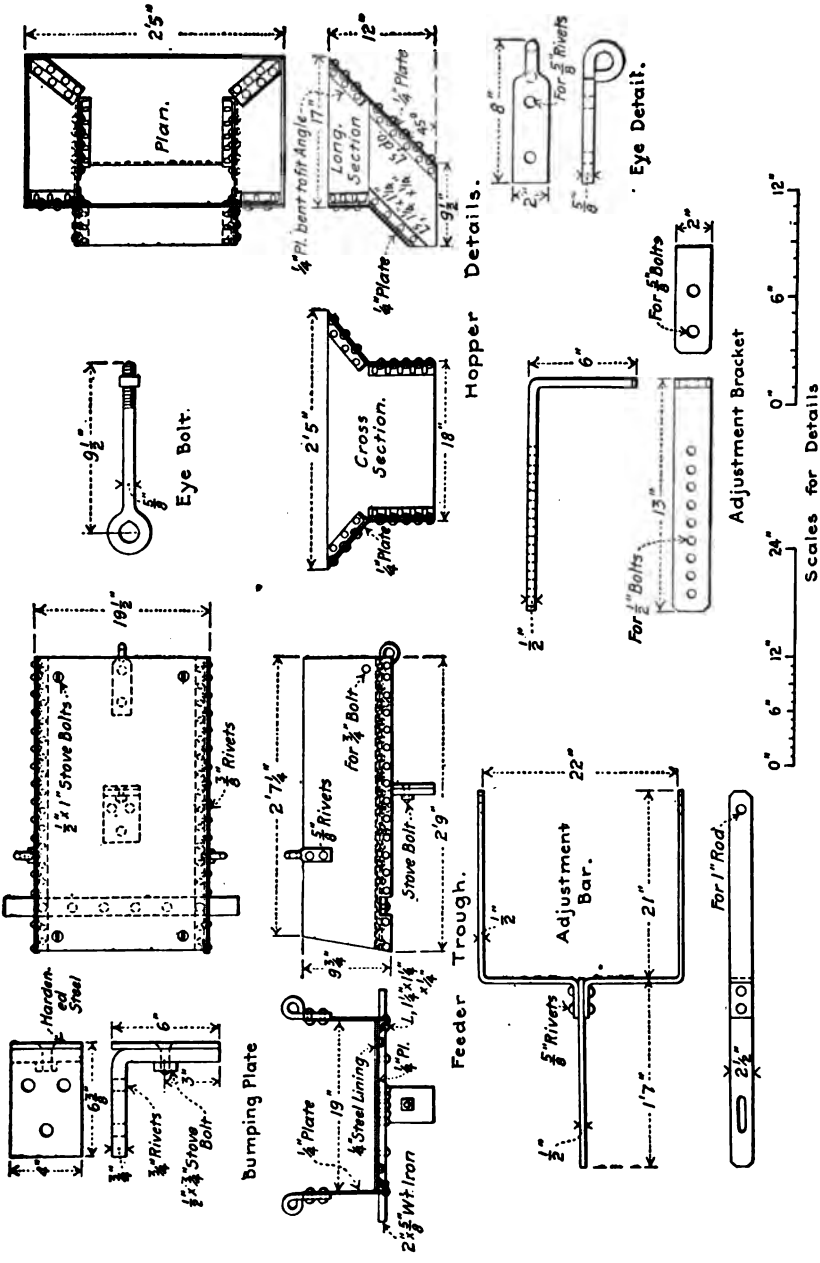
Plan.
Long. Section
Cross Section.
Hopper Details.
Eye Bolt.
Eye Detail.
Adjustment Bracket
Adjustment Bar.
Feeder Trough.
Bumping Plate
Scales for Details

FIG. 35.

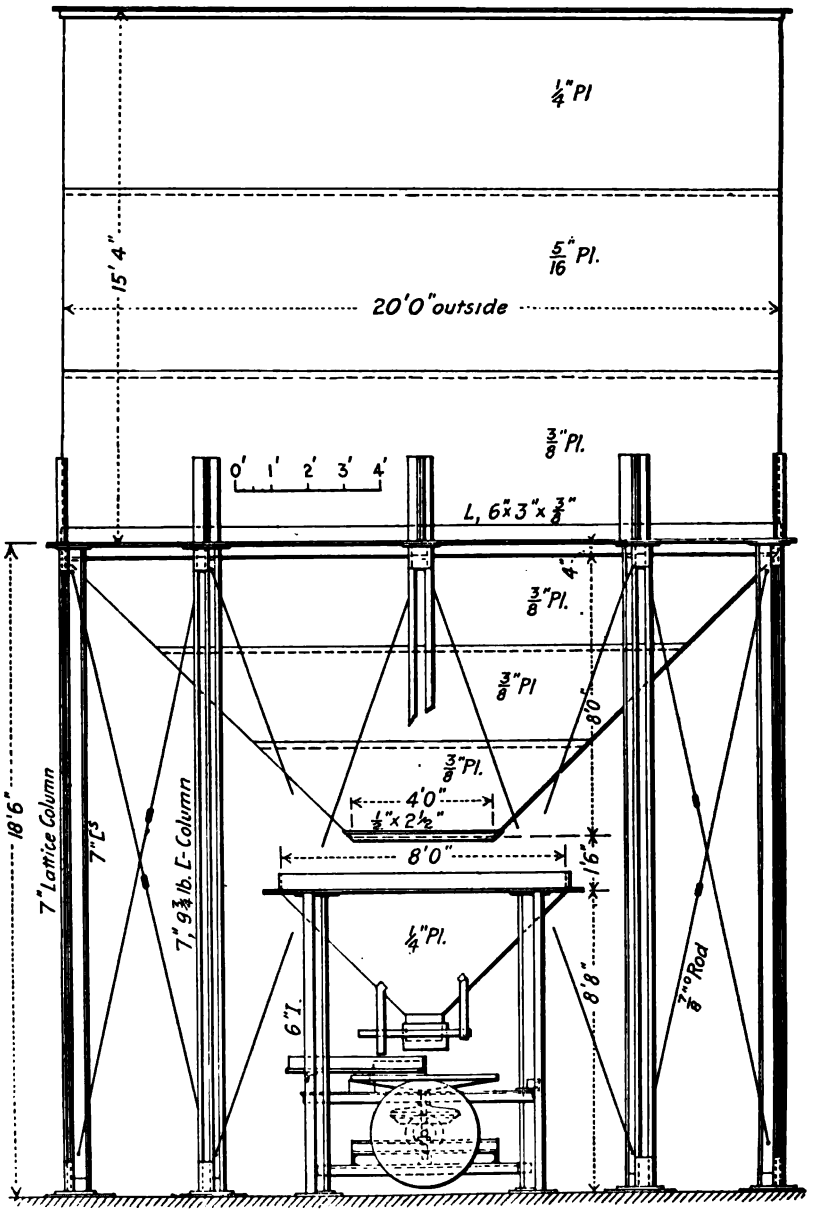

General Elevation A-A.

FIG. 36.

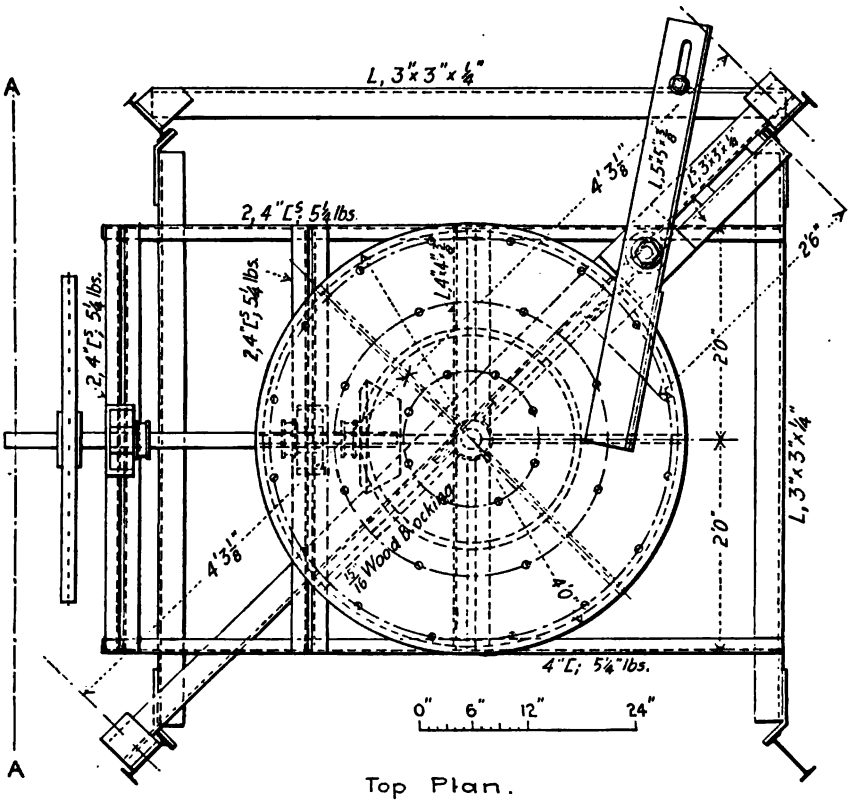

Top Plan.

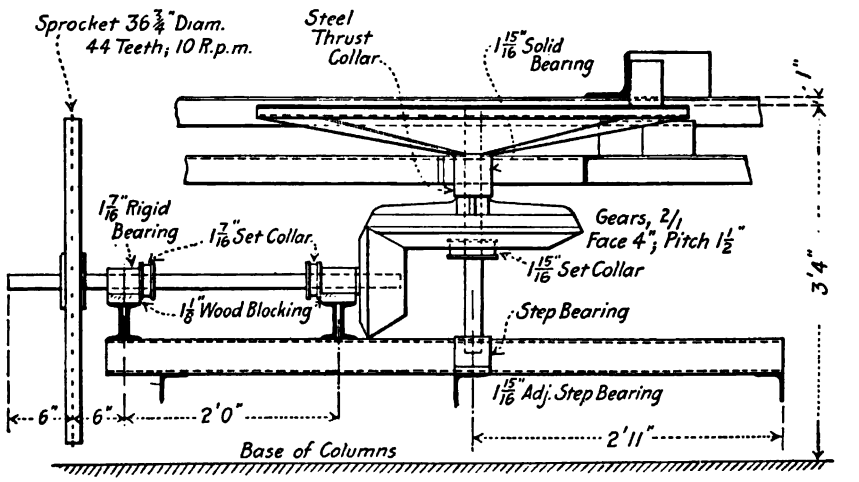

Sectional Elevation.

FIG. 37.

the bottom of the hopper the stream of ore flowing on to the rotating plate becomes heavier and the reverse movement diminishes it. The plow which removes the ore can be set to take off any width of stream desirable.

Grizzlies.—In the crushing plant the chutes nearest the No. 1 crushers are connected with them sometimes by plain chutes or preferably with chutes provided with grizzly bars. The chutes at a distance from the crushers can serve the latter by a conveyor, a car or a combination of car and pocket at crusher. In all these cases the run-of-mine ore should be passed over some form of screening device to remove the fines reducing the burden on the crusher and allowing preliminary sorting operations. The most common form of grizzly is a series of tapered bars held together with round cross bars, the desired set between the bars being secured by washers. Cross sections of the standard bars rolled by the iron works are shown in Fig. 38. The manufacturer in making up grizzlies merely pierces them

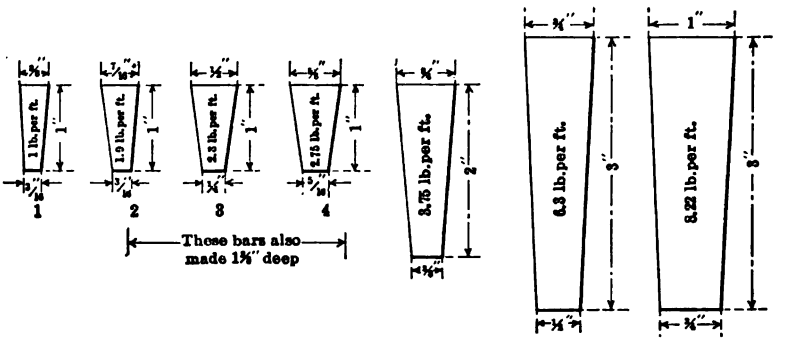

FIG. 38.

at proper intervals and ships to the buyer with the necessary rods and washers. The spacing of the bars will be equal to the set of the crushing machine below it. Where little or no attention must be given to the grizzlies they should be set on slopes varying from 34 to 45 deg. For sorting operations or where the crusher below the bars is fed by hand the ore being more or less dragged forward by a rake the slope can range from 25 to 35 deg. For ordinary medium dry ore ranging in size from pieces which will enter the mouth of a 9 × 15 Blake crusher to dust size, a slope of 3/4 to 1 or about 37 deg. will be found sufficient to keep the grizzlies clear. When the ore has been crushed to a size of 1 to 1 1/2 in., a slope of 45 deg. will be necessary with dry ores. It will seldom be necessary or desirable to have a spacing less than 1 in. The capacity is practically unlimited and being but the roughest kinds of sizing devices no anxiety need be felt in installing a small width of grizzly for a very large tonnage. The capacity of grizzlies may be roughly stated at 150 tons per ft. of width per diem times diameter of largest piece in inches or fraction of an inch. The amount of undersize and spacing is immaterial. The wear on grizzly bars is so slight that it need

not be given any consideration. Most of the wear will be found at the points where the binding rods pass through and particularly the central ones. Fig. 39 shows the appearance of wear at the binding rods. The object of the binding rods in addition to the mere holding together of the bars is to prevent them from being forced apart by the wedging impact of the ore. Usually four sets of rods and washers are provided, a set at top and bottom and two others making equal spaces between. This will be the arrangement for grizzlies 6 ft. or longer but for shorter ones three sets will be ample. For short grizzlies with gentle slope used before crushers fed by hand and of a length of 3 to 5 ft., two sets of binding bars will be sufficient. For grizzlies 5 ft. long or under it will be found preferable to let the ends of the grizzlies rest in tapered depressions made in a single casting to hold the bars at the top and with a single binding rod at the bottom. If the length of the depressions be made from 4 to 6 in. long depending on the length of the grizzly, the bars will be held with sufficient rigidity against springing by the ore. To hold the bars in place at the top a covering piece of sheet steel is used. For ordinary service, grizzly bars need not be greater than 8 ft. long. The width need not exceed 50 per cent. that of the belt or chute serving them. Grizzlies are frequently made of punched plate or cloth.

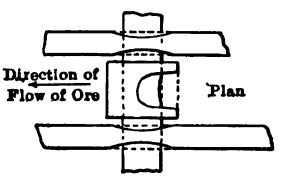

FIG. 39.

Ore Sorting.—Ore sorting can be practised with one or two ends in view. The first is to effect a concentration by hand, the concentrate or shipping ore being directly removed by hand and routed to some convenient point for shipping. The second end which can be effected by sorting is to raise the grade to a more or less degree by removing by hand worthless or nearly worthless pieces of rock. The first is the more important and the end for which sorting is most commonly conducted. In the Cripple Creek District surface sorting is universal, the worthless or very low-grade ore which results from screening out the rich fines, being picked over by hand for large pieces of value, the criterion for removal being any appearance indicating vein material, drusy surfaces of quartz or other minerals, narrow vuggy cavities and of course any sheen of telluride minerals. The fines and large rich pieces go to the cyanide mills and smelters and the balance to waste. The loss in waste is comparatively small and the fines and sortings carry practically all the gold, and as about one-half of the ore is removed in the form of fines and rich pieces, the shipping ore is about twice the value as that hoisted from the shaft.

The advantage of sorting may be estimated from the following figures which may be considered to be rough averages in copper and lead mills in the United States. An average figure for the ratio of concentration is about 7 and the average cost of milling is 60 cents. The average metallurgical saving may be assumed to be 80 per cent. The operating expenses for

producing one ton of concentrate are $4.20. If the ore be worth $7 per ton, then the loss per ton of ore milled will be $1.40 and per ton of concentrate $9.80. The total expenditure for milling is $14 per ton of concentrate. The cost of sorting per sorter may be put at $3.20 where the wage is $3 per 8-hour shift, the balance of 20 cents being for all other expenses of sorting, consequently in order for the ore sorter to do only equally as well as the mill he will have to sort out but 0.23 ton of first-class crude ore in a shift. Two of the factors entering into the capacity of an ore sorter are the size of the pieces to be sorted and their specific gravity. The coarser the ore the greater the day's tonnage made by the sorter, and the greater the specific gravity the greater will be the tonnage removed. The success of ore sorting will depend on obtaining a payable rate for the removal of the pieces of a shipping grade. As a rule the sorted ore will be of lower grade than the concentrate made in the mill. One reason for low-grade ore results may arise from the difficulty of distinguishing the first class ore from the second. This difficulty arises most frequently with oxidized ores. For example, it is often quite difficult to distinguish massive lead carbonate of shipping grade from worthless iron-stained gangue. Again where the valuable mineral is rich but disseminated it is difficult to train the ore sorters so they will know what to reject and what to take. A third difficulty arises from the close resemblance of certain minerals to one another; copper sulphides are confused with slightly oxidized pyrites; high-grade silver minerals cannot be distinguished from lead-zinc and copper minerals, etc.

The usual sorting ranges employed in the United States are pieces larger than 3 in. and pieces ranging in size from 3 in. to 1 in. From a picking belt the rate of removal at a maximum may be considered to be for the lower range of sizes, as two seconds, for a lift and cast, the pieces being always thrown away from the sorter and not drawn toward him. For pieces of 3-in. size and over, both hands may be considered as engaged in the sorting operation. A piece of 1-in. galena ore containing 40 per cent. lead will weigh 0.18 lb., and a piece of ore of this value 3 in. on an edge will weigh 4.86 lb. For the range 3 in. to 1 in., the average weight of piece lifted, may be considered the average of the two, or 2.52 lb. Every two seconds, the ore sorter consequently disposes of twice 2.52 lb. of crude ore, or in a shift of 8 hours, 36.3 tons. This will be the maximum tonnage of 40 per cent. lead ore the sorter can dispose of provided as fast as he wants them he finds two pieces of ore directly under his hands. Referring to the curve of permissible per cent. of shift the sorter can be active, Fig. 40, it will be found that the working capacity is 24.2 tons. To gain an idea of the maximum capacity of the sorter under the same conditions with pieces of ore larger than 3 in., it may be assumed that the larger piece of waste in the average run-of-mine ore is about a 9-in. cube and the largest piece of 40 per cent. ore about a 5-in. cube. This will have a weight of 22.50 lb. and the average of this and the weight of 3-in. cubes is 13.68

lb. Now by reference to the curve showing the permissible percentage of 8 hours the sorters can be under muscular strain without undue fatigue and for individual weights of any substance, it will be found that for pieces of ore averaging 13.68 lb. 46 per cent. of the shift is indicated as the maximum proportion of the day the sorter can be active. About 3.5 seconds will be required on an average for disposing of a single piece of ore and the hands can be used individually for but 50 per cent. of the time. The tonnage under these assumptions and conditions becomes for 8 hours, 38.8 tons.

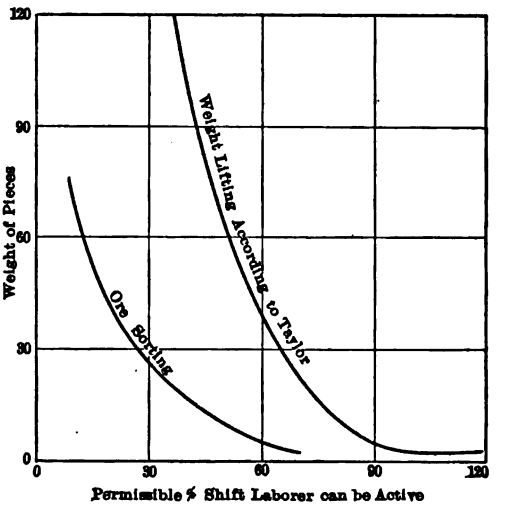

FIG. 40.

For the finer sizes those under 3 in., a slow moving flat picking belt will give admirable service as a sorting platform. I prefer this style of sorting device to a revolving table, first because the approach of pieces of ore or waste to be removed can more readily be detected; the belt acts as a conveyer and a disposition of rejected material is more readily obtained. It is said by Richards that the circular revolving tables create dizziness in the sorters when it is run at a uniform speed. There must also be (due to the variations in linear velocity from the periphery to the center) a certain amount of confusion or at least a tendency to do more satisfactory work on the inner side of the ring of ore, than the outer where the rate of translation of pieces is greater. For conducting sorting along with other operations performed in the rock house the picking belt will be found to usually fit in with the design of the other elements better than a revolving table.

In the matter of capacity per sorter per shift, a figure on 3-in. to 1-in. pieces, 40 per cent. grade has already been presented to show the tonnage accumulating in 8 hours, one factor in the computation being the minimum time required to dispose of a single piece. In sorting ore for the removal of rich pieces the question of obtaining a large tonnage is within certain limits not so important as obtaining a good shipping grade. Now each piece of ore lifted from a sorting belt under these conditions requires a mental process of decision, which time albeit a very brief time, but adding to the total time required for a single sorting motion. Again it requires a concentration of mind for after the sorter makes up his mind that a pair of pieces of ore should be removed from the belt he is unable to survey the belt

for other rich pieces until he has disposed of those in his hand. This means that pieces of ore warranting removal pass by the sorter without his having noticed them. For this reason alone, if for no other, two or more sorters will often be required in cases where the total tonnage sorted daily is well within the capacity of the sorter as a mere machine. The time lost in making decisions will increase with the difficulty of deciding what to take. A stream of small black and white objects would make a sorting problem which would be nothing but the physical capacity of the sorter. Pure bright pieces of galena in a light colored gangue makes a sorting problem of about this weight, but where a lower average grade than the purest galena would have to be sorted out such as the 40-per cent. grade which has been used in the discussion, the problem becomes greater for the sorter has to make up his mind what pieces to take below 40 per cent. as well as those above, and offering little difficulty in choice, the two kinds giving an average grade of 40 per cent. The factors affecting the sorters capacity are the advance of the sorting platform, whether a belt or revolving table, and tonnage available for removal. In the accompanying tabulation various capacities of a flat conveyer belt 36 in. wide are given at different speeds in feet per minute, the range of speeds will be found to conform to practice. The size of ore is

CAPACITY OF FLAT 36-IN. CONVEYER BELTS AT VARIOUS SPEEDS

Max. Capacity 36-in. belt, tons in 8 hours	250.4	333.6	417.0	500.4	582.4	667.2	750.0
Belt travel feet per minute	15	20	25	30	35	40	45
Distance feet traveled in 2 seconds	0.50	0.67	0.83	1.00	1.18	1.30	1.50
Total capacity crushing plant tons in 8 hours	417.3	556.0	695.0	834.0	970.7	1121.0	1250.0
Tons lead at 4 per cent.	16.7	22.3	27.8	33.4	38.9	44.5	50.0

ORE AVAILABLE FOR SORTING AND AVERAGE SPACING OF PIECES

Per cent. total weight, lead available for sorting	Weight shipping	Average spacing	Weight shipping	Average spacing	Weight shipping	Average spacing	Weight shipping	Average spacing	Weight shipping	Average spacing	Weight shipping	Average spacing	Weight shipping	Average spacing
10	8.4	0.78	11.1	0.78	14.0	0.78	16.8	0.78	19.7	0.78	22.3	0.78	25.2	0.78
9	7.6	0.84	10.0	0.84	12.6	0.84	15.1	0.84	17.6	0.84	20.2	0.84	22.7	0.84
8	6.7	0.96	8.9	0.96	11.4	0.96	13.7	0.96	16.0	0.96	18.2	0.96	20.5	0.96
7	5.9	1.14	7.8	1.14	9.8	1.14	11.8	1.14	13.7	1.14	15.6	1.14	17.6	1.14
6	5.0	1.26	6.7	1.26	8.4	1.26	10.1	1.26	11.8	1.26	13.4	1.26	15.1	1.26
5	4.2	1.56	5.6	1.56	7.2	1.56	8.6	1.56	10.1	1.56	11.5	1.56	13.0	1.56
4	3.4	1.92	4.5	1.92	5.6	1.92	6.7	1.92	7.8	1.92	8.9	1.92	10.8	1.92
3	2.6	2.46	3.3	2.46	4.4	2.46	5.3	2.46	6.0	2.46	7.0	2.46	7.9	2.46

an average of 1 to 3-in. pieces or a piece about 2.4 in. on one side, and it is assumed that the grains occupy the belt 1 grain deep and that the broken ore weighs 115 lb. per cubic foot. The third line of figures shows the distance advanced in 2 seconds, and the fourth the tonnages corresponding to the belt tonnages before the material below 1 in. has been removed assuming that the 3 to 1-in. ore is 60 per cent. of the total tonnage reaching the crushing plant. The fifth line of figures gives the tons of metallic lead in the original ore containing 4 per cent. lead.

Of these weights of metallic lead it is assumed that the percentages available for sorting range from 10 to 3 as indicated in the column at the extreme left, and bottom. The columns facing this one and coming in pairs under the headings of capacity, belt speed, etc. represent in the first column of each pair the weight of crude ore of 40-per cent. grade corresponding to the per cent. of metallic lead available for sorting and in the second column of each pair the average spacing of pieces of 40-per cent. grade ore as an average on the belt under the different belt speeds, the shipping ore being considered to be made up of an equal number of pieces assaying below 40 per cent. and an equal number above. The tonnage of shipping ore is consequently double what it would be if all the pieces sorted out were exactly 40 per cent. assay. It is assumed that the pieces of first-class ore come along in a single line (which they do not in actuality, being more apt to pass in front of the sorter in bunches); the assumption is the more favorable for greater sorting capacity. The highest figure given in the table for the percentage of metal available for sorting, viz., 10 per cent., is one that is very seldom to be found in practice indeed if so large a proportion of shipping lead reaches the mill there is decidedly something wrong with the system of mining for it can be sorted more cheaply in mining operations than at the mill. If from 3 to 5 per cent. of the lead reaching the mill be available for sorting which is about the average range where sorting operations are practised in the United States, it will pay very handsomely. The broken line in the accompanying table shows the limit of removal with the various belt speeds.

Owing to the difficulty of recognition the capacity of the ore sorter per 8 hours, would not exceed 25 per cent. of his capacity as a mere machine, or 25/4 equals 6.25 tons. If for this range of size of material and which may be taken to represent average difficulty in recognition of grade we adopt 6.25 tons as a good day's work while maintaining the grade of shipping ore, then for any other ore presenting equal difficulty in recognition we may write for the daily duty of the sorters as $\frac{6.25}{5.0} \times$ sp. gr., the sp. gr. of the shipping product is approximately 5.

For waste where there is a continuous stream of clean light-colored rock not requiring recognition, the duty of the sorter for 3-in. to 1-in. pieces as 15 tons per shift $25 \times 3/5$, 3 being the specific gravity of the waste and 5 of the shipping product, the ratio of waste to ore is 2.4, that is if waste and ore

are both to be sorted for every ton less than 6.25 of shipping ore, 2.4 tons of waste may be sorted. The capacity per sorter on waste, on cubes from 9 in. on an edge to cubes 3 in. on an edge, is equal to 20.3 tons per shift, obtained as follows: average time to lift and cast, or get rid of a single piece, 5 seconds; average piece weighs 33.6 lb. and since with this weight the body can be in motion, but 21 per cent. of the shift, the solution of the problem is as follows: $\frac{33.6 \times 12 \times 420 \times 0.21}{2000}$ equals 20.3 tons. For the shipping product of the same range of size, the capacity is 9.7 tons, or one-fourth of 38.18 tons, page 101; the ratio of the tonnages is about 2.

In sorting, the following requirements must be observed:

(1) The fines must be removed.

(2) The resulting oversized material must be sprayed with water sufficiently to remove all adhering slime and dust from the coarse pieces. In some cases it may be necessary to thoroughly wash the oversize pieces.

(3) The ore must be fed on the sorting platform at a uniform rate and so nearly one grain deep as is practicable.

(4) The range of sizes sorted should not be too great.

In other countries than the United States, sorting is carried down to 1/2 in. The amount of material which can be removed in a shift below 1 in. in size is so small and the difficulty of discerning it so great that with the high cost of labor prevailing in our Western camps it does not pay, as a rule, to sort below this figure. For smaller sizes it is more economical to remove the rich pieces by machinery.

Not only must the fines be removed so as not to cover up the rich large pieces, but adhering slime and dust must be washed from the rich crude pieces. In wet mines in the removal of the ore from the stopes to the mill the large pieces of ore and rock become uniformly coated with slime so as to be indistinguishable, one from the other. As a rule, after the fines are removed a limited amount of water thrown on the remaining material at the head of the sorting machine from spray pipes will sufficiently cleanse it for sorting operations. In some cases the slime is so tenacious that after a preliminary screening on a grizzly the oversize must be led into revolving screens and thoroughly washed, the resulting muddy water being settled and treated in the mill or shipped directly after dewatering if of a sufficiently high grade. Where the rich mineral is sparsely disseminated through the rock and the indications by which its presence is recognized are obscure, thorough washing may be necessary and the ensuing sorting operations must be conducted with great care. The spray pipes are placed across the grizzly at the lower end, the latter being fed by a mechanical feeder, conveyer belt, elevator or any mode ensuring a uniform rate of feed. If the amount of spray water used be quite small it will usually do no harm to allow it to mix with the stream of fines below the grizzly. If the water makes the fines too wet for ensuing operations, then a catch box may be placed below the lower

portion of the grizzly and the slime which forms in the washing operation can be led to a dewatering tank. If the amount of spray water used be small there is no objection to oversize material being sprayed in the chute from an oversize bin when fed directly on to a picking belt or table. In this mode of operation the ore flows over grizzlies mounted on top of a double pocket bin, one pocket being for oversize and the other for undersize. From the bottom of the oversize pocket the ore is fed directly onto the belt and sprayed during passage down the chute. Figs. 41, 42 and 42a show means for thoroughly washing the ore prior to sorting. The fines having been removed, the oversize passes onto the slat belt shown in the figures. The steel slat belt passes through a steel box provided with spray pipes. The whole device permits the ore to be washed on all sides and there is no wear and tear incidental to its use as there would be if the ore were washed on screens.

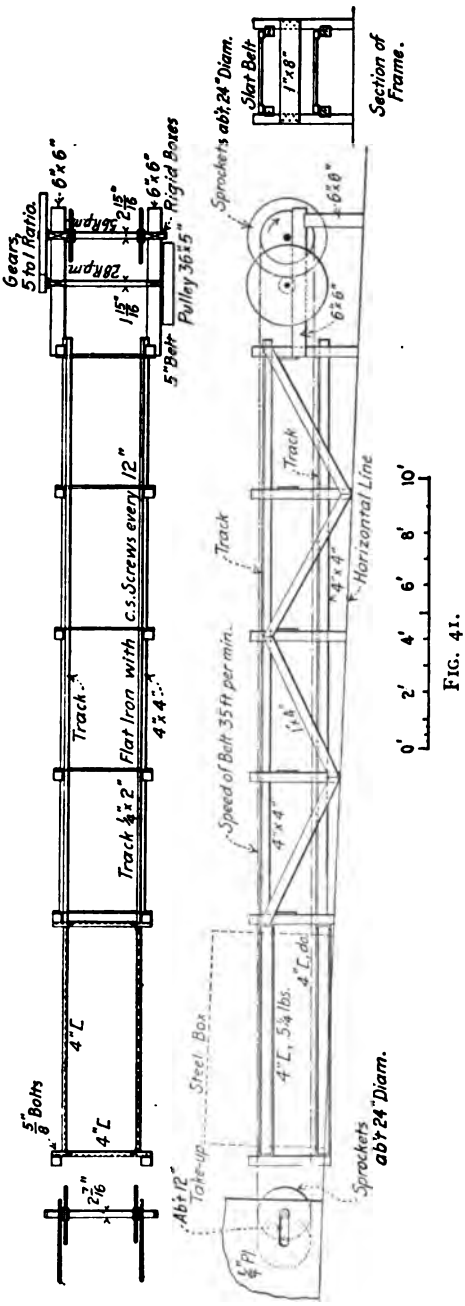

FIG. 41.

Where sorting operations are conducted in connection with coarse crushing and sampling operations, the sorting machinery should almost invariably be subordinated to unlocking and sampling, that is, no attempt at grading or crushing and grading should be made which is not warranted by the other two operations. The usual ranges for ore sorting are two in number: pieces larger than 3. in. up to the maximum size, and from 3 in. to 1 in. These sizes fit naturally into most crushing schemes. If a grizzly

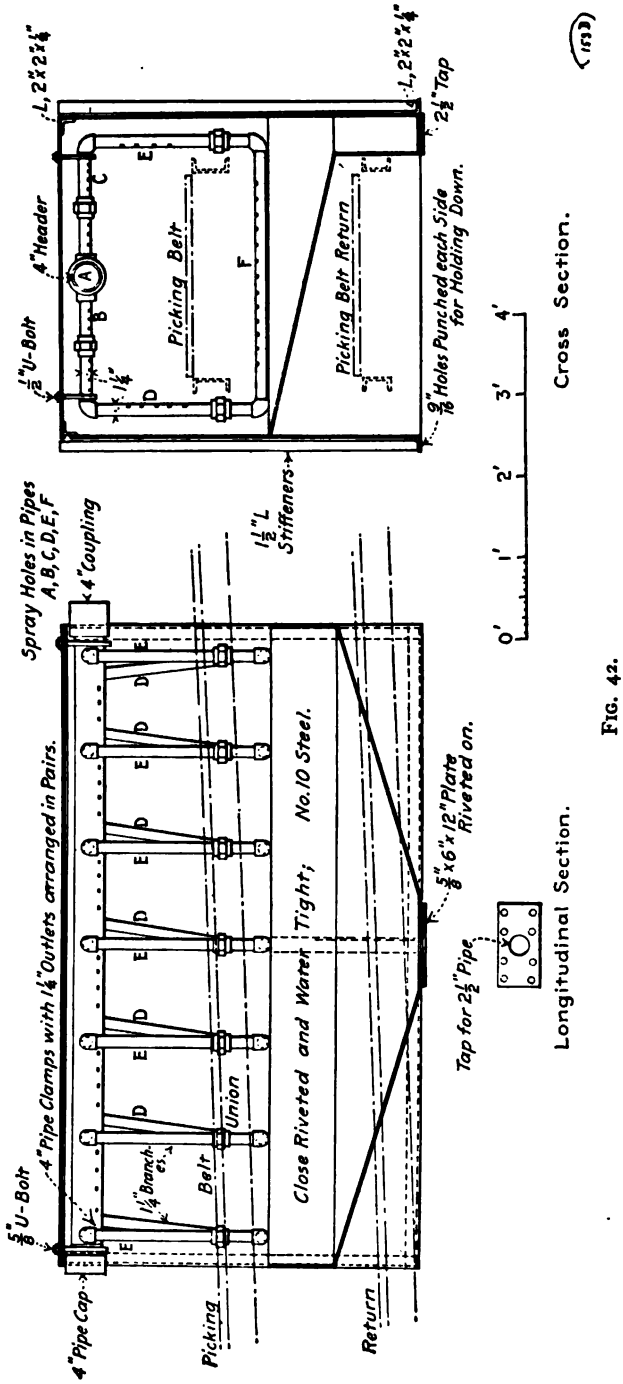
Spray Holes in Pipes A, B, C, D, E, F
4" Coupling
1½" L Stiffeners
4" Header
1" U-Bolt
Picking Belt
Picking Belt Return
2½" Top
Holes Punched each Side for Holding Down.
4" Pipe Clamps with 1¼" Outlets arranged in Pairs.
5/8" U-Bolt
1¼" Branch
Union
Belt
Close Riveted and Water Tight; No. 10 Steel.
5/8" x 6" x 12" Plate Riveted on.
Tap for 2½" Pipe
4" Pipe Cap
Picking
Return
0' 1' 2' 3' 4'
Cross Section.
Longitudinal Section.

FIG. 42.

be placed before the first crusher with 3-in. spacing then the oversize can be sorted before going into the crusher. Below the crusher the streams of ore will be united, the fines below 1 in. can be removed by a second grizzly with 1-in. spacing and the oversize after being sorted going into crushers or rolls. In mills where there is but one crusher, the ore being reduced in one operation from mine size to 1 in. or 1–1/2 in., suitable for feeding to rolls, sorting can only be practised on a limited range of size of pieces and consequently less effectively than with these crushing arrangements.

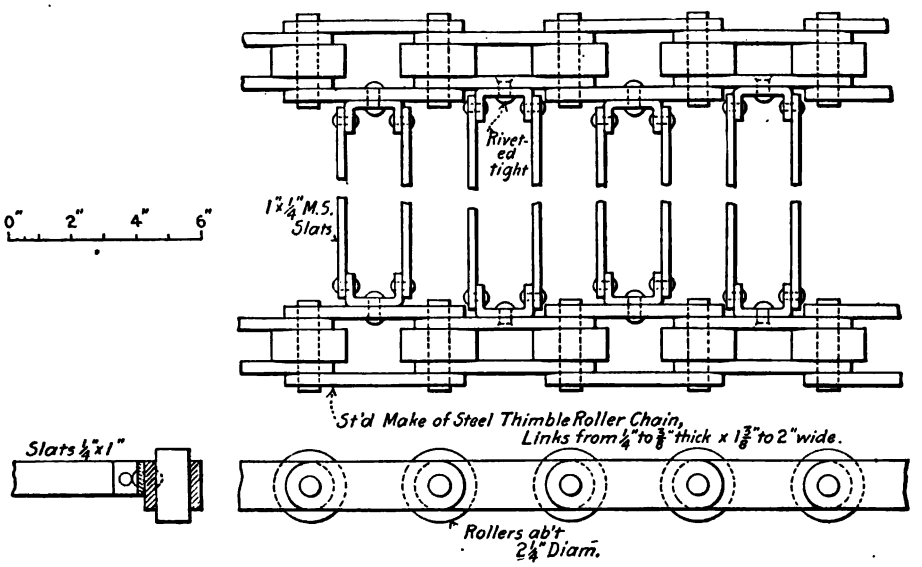

FIG. 42a.

Revolving tables range in diameter from 15 to 30 ft. The peripheral speeds range from 15 to 50 ft. per minute as they do on the sorting belts. The simplest form of table consists of an annular ring, the space in the center being left open to hold pockets to receive the sortings. The width of the sorting ring may vary from 2 to 3 ft. The annular surface is supported by four or more arms connected to a vertical shaft driven at the top by gearing, the whole mechanism being supported by a step bearing below. A table of this description can be made at the mines or be purchased from manufacturers of milling machinery. For a belt type of machine all the elements of design have already been given. A conveyor belt with lips is manufactured and has some slight advantages over a perfectly flat belt.

Cost of Sorting.—The cost of sorting depends largely upon the labor employed; the other factors of cost, power, supplies, depreciation, etc., can be figured at about 8 per cent. of the cost of the labor. Sufficient data have been given from which in any particular case the daily duty per sorter can

be estimated and with this as a basis and an additional 6 to 10 per cent. for the other expenses it is possible to forecast, after making the tests indicated on page 19, what results will be attained in any problem in sorting. The costs in a typical sorting plant in the Cordillerian region are given in the tabulated statement of results and from sheet Fig. 42b at the Hecla mine in northern Idaho.

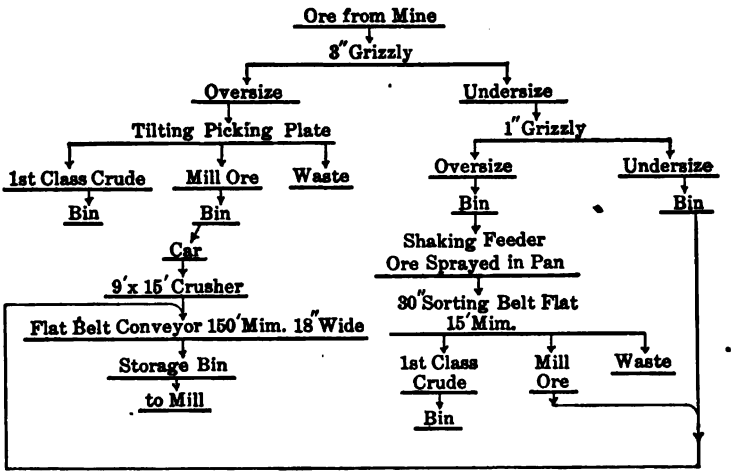

FIG. 42b.

TILTING PLATES, 3-IN. PIECES AND LARGER, 4 SORTERS 16 HOURS AT $3 PER SHAFT

Waste					Crude ore		
Tons, 16 hr.	Tons per sorter	Cost per ton			Tons, 16 hr.	Tons per sorter	Cost per ton
		Labor	Other items	Total			
25	6-1/4	$0.33	$0.01	$0.34	11	2-3/4	Same as waste

PICKING BELT, 3 IN.-1 IN. PIECES, 4 SORTERS FOR 16 HOUR AT $3 PER SHAFT, 2 OTHERS AT $3 PER SHAFT

Waste					Crude ore				
Tons, 16 hr.	Tons per sorter	Cost per ton			Tons, 16 hr.	Tons per sorter	Cost per ton		
		Labor	Other items	Total			Labor	Other items	Total
17	4-1/4	$0.55	$0.05	$0.60	9	2-1/4	$0.97	$0.09	$1.06

TOTALS AND MISCELLANEOUS

Tons hoisted, 16 hr.	Total waste sorted, tons, 16 hr.	Assay per cent. lead	Total crude ore sorted, tons, 16 hr.	Assay per cent. lead	Cost per ton total material removed	Total cost per ton crude ore produced
350	42	0.4	20	40	$0.50	$1.60

Sampling.—The theory and practice of ore sampling will be discussed in the ensuing paragraphs and the Vezin sampler for sampling coarsely broken dry ore will be described. A satisfactory means for sampling wet sands and slime will be outlined.

Hand Sampling.—The whole art of hand sampling is so greatly dependent upon thorough mixing that it seems to me best to begin the theory of hand sampling by describing the results obtained by mixing. It is very difficult to get a clear mental picture of the arrangement of the individual pieces in a mixed mass of ore consisting of many sizes and grades of pieces. Some illustrations may make the result attained by thorough mixing clearer. Let it be imagined that the ore to be mixed lies in two layers on the mixing floor, one layer consisting of pieces of a dark heavy mineral and the other of pieces of a light colored light mineral. Suppose further the layers consist of grains of equal size and shape. It must be evident that the mass as a whole can be considered to be in the extreme opposite condition to what would be termed "thoroughly mixed." If the two layers are to be mixed by hand this operation will commonly be done by turning over the mass at every point with a shovel. The laborer doing the mixing removes a shovelful from the mass and spreads it out on another portion of the mixing floor in a layer approximately 1 grain deep. From the edge of the shovel will fall a stream which may be considered for practical illustration one in which in any direction there is alternately a piece of the dark heavy mineral and the lighter one. A little reflection will make it evident such a result will be attained on successive mixings. The ore is then said to be thoroughly mixed, having attained a symmetrical arrangement of the pieces and *thorough mixing* may be described as an operation which gives a *symmetry of arrangement.*

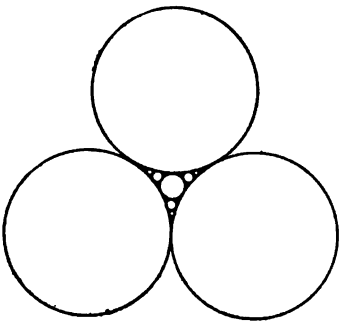

FIG. 43.

In concrete mixing the most desirable symmetry would be attained by the arrangement of pieces indicated by the diagram, Fig. 43. By arranging the spheres so that the voids created between them are successively filled with spheres of diminishing size the void space would finally become zero and the amount of cement required would be nearly zero. To produce a concrete aggregate of this character there would in practice be required a special grading machine capable of delivering sizes comparable to the size of spheres shown in the diagram. Commercial grading of this character has not as yet been attained, but of late years there has been some attempt to have some range in the sizes of rock employed so as to reduce the percentage of void which must be filled with sand and cement. The elimination of voids can most perfectly be done by putting into any particular void the largest piece of rock which it will hold, the remaining void being in turn filled with the largest pieces which will go into them, etc. Suppose the second largest sphere in the center of the diagram be replaced by a large number of small spheres, these being arranged in the most economical

way as in the case of the three largest spheres shown in the diagram, then the void which was completely obliterated in the space occupied by the second size sphere becomes 25.95 per cent. of the volume of this sphere. A practical difficulty in the way of realizing even approximately the arrangement and economy shown in the diagram lies in the mixing. Repeated folding or spreading of the constituents of a concrete in layers would tend to give at any point in the aggregate a collection of grains in which only a single one of the different sizes would be present; it would not ensure that they would take an arrangement similar to the one shown in the diagram. Possibly if the whole mass were rotated and while thus rotating were subjected to repeated shakings it would assume an arrangement similar to the one shown in the diagram. In mixing broken ore with all sizes of pieces from the maximum fixed by the set of the crushing machine down to zero size there would ensue an arrangement, after the mixing had been carried to a sufficient degree, roughly similar to the one shown in the diagram; but as there would be all gradations of sizes as well as of shape and assay a section through the mass theoretically perfectly mixed where there would be a complete pattern or "repeat" would be of great complexity. In practice perfect mixing from the theoretical point of view would be impossible. The criterion of mixing in practical sampling is the eye; when all parts of the mass appear alike the sample is said to be perfectly mixed. The sectional area of a repeat or pattern will depend upon the dissemination of the metallic values ranging from the point where the percentage of metallic values are the same in all pieces to the point where the whole of the metallic values are concentrated in a few pieces, when the whole mass of the ore would not yield a repeat without fine crushing and mixing. The size to which the mass of the ore is crushed affects the section of the repeat—the more finely the ore is crushed the smaller will be the area of the section of the repeat, that is, the smaller the portion of the mass which can be removed at random for a perfect sample provided there is perfect mixing.

Fractional Selection.—In hand sampling the method of reduction in the size of the mass of ore commonly preferred is *fractional selection* with a shovel, every nth shovel being set aside which after crushing forms a mass from which again the nth shovel is taken, etc. The error of sampling tends to become greater as n becomes greater, as will be evident from the following considerations. Let a flattened mass of ore be represented by 100 squares of area which just cover it, each square representing the area which would be taken out in removing a shovelful. Let first 10 of these squares be black to represent the metallic content in the mass and for simplicity the weight and assay under the black squares be considered equal to those under the white squares. The assay of the whole mass is then represented by 1/10. The black squares are considered to be distributed at random among the white. If alternate shovelfuls are taken then 50 squares will be removed. The greatest possible extremes of error are to get all the black

squares in the 50 shovels, yielding material which will assay 1/5; or to get none of the black squares, yielding a sample which will assay nothing. The arithmetical average of the possible combinations is however 1/10—the actual assay. If every fourth shovel is taken then there are 25 shovels removed; the extremes of error are, therefore, 10 black shovels in 25, assay 10/25 and at the other extreme assay 0, average assay 1/5 or 100 per cent. too high. With every fifth shovel, 20 shovels removed would give an average assay in the same way 250 per cent. too high. Removing every tenth shovel the average assay becomes 1/2 or 500 per cent. too high. If the assay of the whole mass is changed, by having more black squares, the following average percentages of variation from the actual assay will be obtained, plus meaning too high a percentage and minus too low.

	Assay of whole mass				
By....shovelful	1/5	3/10	2/5	9/10	9/100
	Percentage too high or too low				
alternate	0	0	0	0	0
1/4	+100	+66–2/3	+66–2/3	−10	−100
1/5	+100	+66–2/3	+66–2/3	−10	−100
1/10	+100	+66–2/3	+66–2/3	−10	−100

Probability does not seem to me to govern in this analysis but rather what may be termed possibility, for only by repeated samplings would the error from insufficient crushing and mixing be averaged from taking the *n*th shovelful. Sampling is an operation which is done but once on any particular mass of broken ore. The analysis indicates that with spotty ores, insufficient mixing and making *n* greater than 2, the assay returns will tend to be too high and under the same condition with ores containing a large proportion of metallic contents the assay returns would be too low. It must be evident on a little reflection that if the black squares were arranged in a symmetrical fashion among the white, an arrangement analogous to what would be obtained by thorough mixing of an actual ore sufficiently crushed, the possibility of error would be much reduced regardless of the value of *n*.

The question as to how far reduction by halves (by alternate shovels), Cornish quartering after coning, or other methods can be carried before the reduced sample must be crushed prior to continuing this operation, is one of prime practical importance in hand sampling operations. It is better to be guided by practical experience in this matter than theory since there would have to be a different theory to apply to each individual parcel of ore. Among the factors required for this theory would be the exact percentage of metal in the sample parcel and its mode of distribution through the mass, factors which cannot possibly be determined. If a mass of ore be broken to size *s*, in inches, and such a mass be considered as composed of cubes of edge *s* inches and the metallic contents be considered as a pure mineral, then

$$s = \left(\frac{wx}{\text{wt. in lb. cu. in. pure mineral}}\right)^{\frac{1}{3}}$$

where w is the safe weight to which the ore may be reduced before again crushing and reducing and x the per cent. of pure mineral.

This formula is evolved from the following conceptions. The parcel of ore (it will be noted the weight of this parcel plays no part in the formula) is crushed to a size s and after thorough mixing it will have symmetrically arranged through it a number of cubes of pure valuable mineral, the number depending upon the percentage by weight of the pure mineral in the sample. Now w is the weight of the sample which contains one of these cubes. To carry out the conception underlying the formula the parcel of ore would have to be spread out on the sample floor and marked off into squares each one of which would be equal to the weight w; then on taking any one of these squares an accurate sample would be obtained. On the basis of reducing by shovels the formula affords some information if solved to determine the value of s. We may assume that the shovelful weighs 15 lb. in the case of an 8 per cent. lead ore; then 15×0.08 is 1.2 lb.; this figure divided by 0.28, the weight of a cubic inch of pure galena gives 4.3, the cube root of which is about 1.5. That is, the ore parcel would have to at least be reduced to 1.5-in. size before sampling by shoveling could be begun. The underlying conception of the formula is, however, faulty when applied to all ores. With many gold ores the gold is disseminated in quartz, and the conception of cubes of gold 1 in. on an edge in a mass of ore crushed to 1-in. size, for example, would be an absurdity. If the gold were disseminated through iron pyrites, then the per cent. of this mineral would be x and the weight of a cubic inch of it would be the denominator in the formula.

Where the percent of metallic substance is small there would often not be sufficient of it to produce a cube of edge s unless s were very small. But, as in the case with the low-grade lead ore, the formula will furnish some guide for the degree of crushing required before beginning reduction with a shovel in the case of a very spotty gold ore. Let it be desired to determine to what degree a gold ore containing $50 per ton in gold in the form of sylvanite, specific gravity 8.16, and containing 28.5 per cent. by weight of metallic gold should be crushed before sampling. The value for s works out very close to 0.25 in. and this would be the limit of size under the formula at which fractional selection with shovels could begin.

The practical rules for hand sampling vary with individual practice, but the following will be found safe. The lot should not exceed 50 tons. Take every tenth shovelful if low grade and every fifth shovelful if high grade, the lot having previously been crushed to 2 in. or less. If the ore is very spotty it should first be crushed to 1 in. or less and every fifth shovelful taken. These directions are based upon the lot weighing 50 tons. If there be less than this, the value of n should be reduced so that taking every nth shovelful will yield 5 tons with low-grade ores or 10 tons with high-grade ores. The sample of low or high-grade ore should then be broken to 1 in. or if very spotty to 1/4 in. Reduce further by fifth or tenth shovelfuls, yielding 1/2 ton in the

case of low-grade ores and 1 ton in the case of high-grade ores. In the cases of these two, the sample should be crushed to 1/4 in. when it may be reduced to 200 or 400 lb. These samples should then be ground to 20 mesh and can then be reduced to 40 or 80 lb. which can be ground further in a disc machine set lightly, following which operation the sample can be reduced to any desired size for preparation of the assay sample. In the case of the very spotty ores the 10 tons of 1/4-in. material should be ground to 1/8 in. when it may be reduced to 1 ton. It should then be ground to 20 mesh and reduced to 200 lb., then ground to 80 mesh and reduced to 40 lb. which should be finely ground before reducing to size for assay preparation. Samples of less than 10 tons each should be thoroughly mixed following every crushing or grinding operation.

Quartering.—With samples below 5 tons in size Cornish coning and quartering can be substituted for fractional selection. The chief advantage of this method is that the reduction is by halves and the portions removed from the ore parcel are large as compared with a single shovelful removed in the fractional selection method. But this advantage disappears unless there is a crushing operation following each coning and quartering. The operation consumes more time than fractional selection. The proper way of conducting this mode of reducing the size of a sample is so well known and has so often been explained that a description of the steps of the operation would be superfluous.

In the "Metallurgy of Lead," by H. O. Hofman, the whole operation is described step by step and this work may be consulted if further information is desired. Coning and quartering has been subjected to much criticism of late years, the principal sources of error cited against it being that in piling up the ore in a cone and then flattening it, the center of the flattened cone will not coincide with the center of the cone before flattening, and as there is a gradation from coarse pieces around the periphery of the cone to the finest on the center, the quarter where the point of the cone lies after flattening will contain too much fine material. Another objection urged against it which is not so material is that it is never possible to divide the cone into four equal parts but the same objection should be cited against any other method of splitting a sample, for example in taking alternate shovelfuls there is apt to be a variation in the amount taken at each shovelful, etc. The great practical objection against the method, however, is that to do it perfectly requires much skill and time and in comparing the work of two skilled operators there is more apt to be a variation than with other hand methods of reducing the size of a sample.

Machine Sampling.—For large samples no hand method compares with automatic sampling in point of cost.

It is customary to say that in passing through the various crushing, conveying, elevating and screening machines the ore is mixed. The main beneficial effect secured by sampling machines is to bridge over gaps in the

flow of ore, or, in other words, they tend to discharge streams of uniform section. This will appear clear when it is considered what is done by machine sampling, there being in a crushing plant a continuous flow of material for sampling periods of 8, 16 or 24 hours, each followed by the preparation of a pulp for assay; or, in the case of a custom sampler the pulps will represent a period of flow of so many tons comprising the lot. Now the only way these large amounts of ore could be thoroughly mixed would be to accumulate them in large piles, and turn the ore over thoroughly by hand or machinery. This could not be done in machine sampling on account of the cost, instead, at regular intervals beginning at the head sampler, the stream of ore is diverted for a more or less long period of time into the spout of the sampling machine. It is not a new, but a very helpful aid to clear thinking, to consider the stream of ore as a ribbon which is being reeled off before the sampling device, the latter breaking its continuity at regular intervals and taking a portion out of it which very closely contains the same proportion of metallic content as the whole stream coming up to the sampler.

It must be evident from the mode of operation at most mines, some stopes being richer than others, that while the daily average of ore may be quite uniform the variation in grade from minute to minute or hour to hour may be very great. The ribbon of ore will not then be uniform in grade but can with truth be thought of as more or less spotted. The only way to avert taking too much of the very rich portions which come along in the ribbon or of the lean portions, is to rake a cut frequently. This does not mean that a large proportion of the whole stream fed must be taken, so much as that the definite proportion which will give a correct sample having been decided upon, the sampling device must be run as rapidly as is consistent with good practice taking a small amount of ore frequently in preference to running this machine slowly and taking a large cut at infrequent intervals. By thus operating the automatic sampler, the same effect will be attained as by increasing the number of shovelfuls set aside for the sample in hand sampling by fractional selection.

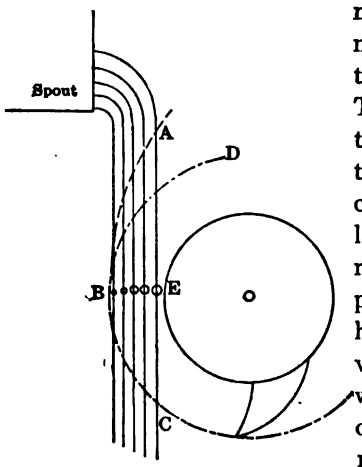

FIG. 44.

The cutting device must pass through the stream of ore in such a way as to take an equal proportion of all parts of it. How not to have the cutter pass through the stream can best be illustrated by some common errors in this respect. In Fig. 44 the sampling device is mounted on a pulley or on a belt passing around a pulley facing the stream of ore falling from a spout. The path of the edge of the sampling receptacle is shown by the dot and dash line

CBD. The gradation of the size of particles in the stream is indicated by the line of figures *BE*, the larger grains in the ore are in the front of the stream falling from the spout, and the finest at the rear. If the stream of ore were momentarily suspended in front of the sampler at the time of a cut being made then the section cut out by the sampler receptacle would be represented by the area *DBC*, and it will be evident that a far larger proportion of the coarse material will be taken out by the cut than of the fine. But, as the stream is in motion the actual area taken out will be represented by an area such as *ABC*, for the line of grains *AC* are falling into the cutting receptacle during the whole time that it is in the stream while those at *B* are only momentarily in the stream. The error caused arises from the fact that coarse pieces have a different value from the fine and as in the majority of cases the coarse pieces are of lower grade than the fine, the return from assaying the sample will be too low. The same criticism will apply to the old Bruntun sampler, Fig. 45.

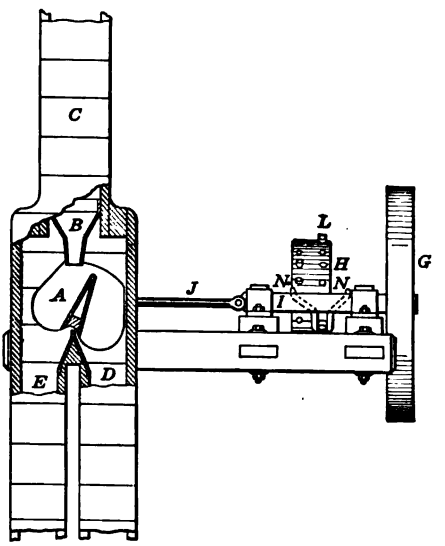

FIG. 45.

The sampling device shown in Fig. 46 consists of a pan mounted on a long swing arm pivoted at some point above not shown in the diagram. At regular intervals this is swung into the stream to the back edge and then out again. The cross-sectional area cut out is indicated by the area *ABC* and as before the proportions of coarse material is too great. After the pan leaves the stream it is automatically unlocked and the contents deposited below the pan.

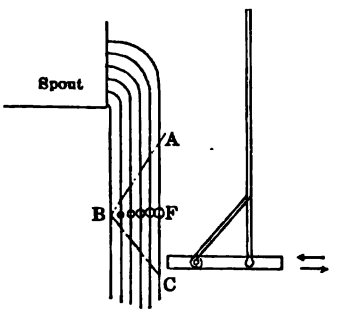

FIG. 46.

The only safe way of passing the sample cutter through the stream of ore is with its edge in a plane at right angles to the long axis of the stream, the cutter entering at one portion and passing with uniform motion entirely through and out at the opposite portion. It will be safer to pass the cutter through the stream from side to side, viewing the front of it, discharging from a spout than from front to rear, or rear to front, for in the latter cases unless the cutter is introduced into the stream at some distance below the point of discharge the reaction

of the large grains striking the edge of the cutter will tend respectively to throw them into the cutter or away from it, whereas for accurate sampling there should be no marked tendency in this respect one way or the other.

FIG. 47.

When damp ore is being sampled, the interior of the cutting device should be cleaned at proper intervals for the ore tends to cling to the sides in the rear portion where the fine ore falls in a side to side cut, eventually leaving only a confined space and reducing the proportion of fine.

The unvarying frame of mind of those having charge of sampling operations should be one of suspicion. Due care should be exercised that all the sampling apparatus is kept clean and running freely. It is an excellent plan to mount a revolution counter upon the samplers, or on the gearing driving them to record the revolutions to the end of the period represented by the assay pulp; should there be much variation from period to period, the causes should be investigated.

Automatic Mixing.—Below the first sampler and preferably before allowing the cuttings to enter the first crushing machine, must be placed a device which will combine the intermittent collection of cuttings. The best one for this purpose is a conical drum with shafts and spiders as in a trommel and covered with sheet steel plate. A drum of this kind from 3 to 5 ft. long and with diameters ranging from 24 to 30 in. for the small end and 30 to 36 in. for the large will be ample for any daily capacity which the sampling plant has to serve. Two spiders are ample: a head or hood spider, and a bottom one.

The result of not having a device for combining the intermittent cuttings into a continuous stream will be seen from the following considerations. Assume that the second sampler is geared so that its cutter arrives at the side of the spout at the same moment that the sample from the first sampler arrives at the edge of the spout, and that both the cutting areas exposed to the stream of ore are the same and equal to a fourth of the cross-sectional area of the stream. If the desire be to reduce by tenths then although this may be attained in the first cutting, in the second under the assumed conditions above a fourth will be taken. It will be impossible to maintain the two cutters revolving at exactly the same rate of speed. Consequently for a limited number of revolutions the second cutter will either be part way under the spout when the sample arrives at this point or else it will not have reached the side of the spout at the moment the ore arrives.

The second sample cutter will, therefore, fail entirely to take any portion of the samples taken by the first cutter and for a more or less lengthy period it will fail to be in pace with the first sampler this condition continuing until

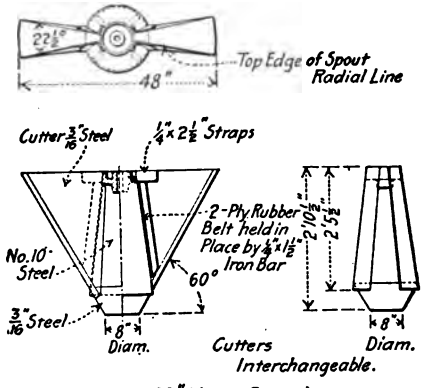

48" Vezin Sampler.

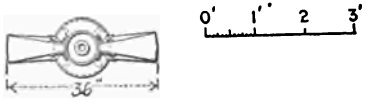

Construction similar to that Shown above.

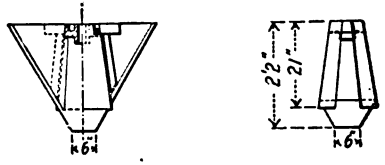

36" Vezin Sampler.

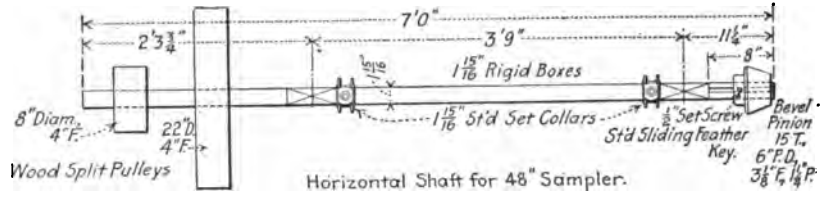

Horizontal Shaft for 48" Sampler.

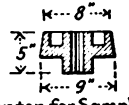

Center for Samplers.

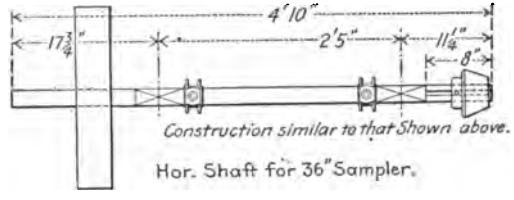

Hor. Shaft for 36" Sampler.

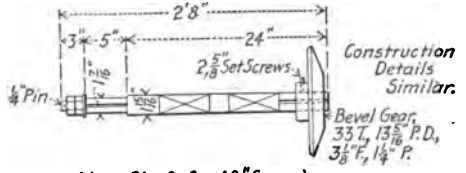

Vert. Shaft for 48" Sampler.

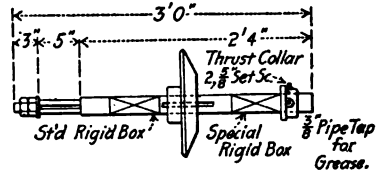

Vert. Shaft for 36" Sampler.

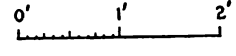

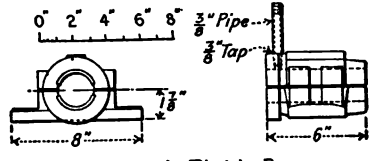

Special Rigid Box.

FIG. 48.

the second cutter again gets into pace with the first. It must be evident from the principles already laid down that this mode of operating is very faulty. Fig. 47 illustrates the results of operating the samplers in this way. Out of the lowermost of the chain of rectangles representing the successive cuts made by the first sampler, the second takes out the portion shown in rectangle one, the stream from the first sampler having almost ceased to flow as the second approaches the spout from which it is falling. In the second rectangle owing to the fact that the speed of the second sampler is greater than the first, a proportionately larger portion of the rectangle is taken. In the third a satisfactory cut across the whole width is taken. In the fourth the second cutter has advanced a part way across and under the spout before the ore begins to flow and in the last or sixth the second cutter is entirely out of synchronism with the first and does not get into synchronism again until the upper series of rectangles is reached.

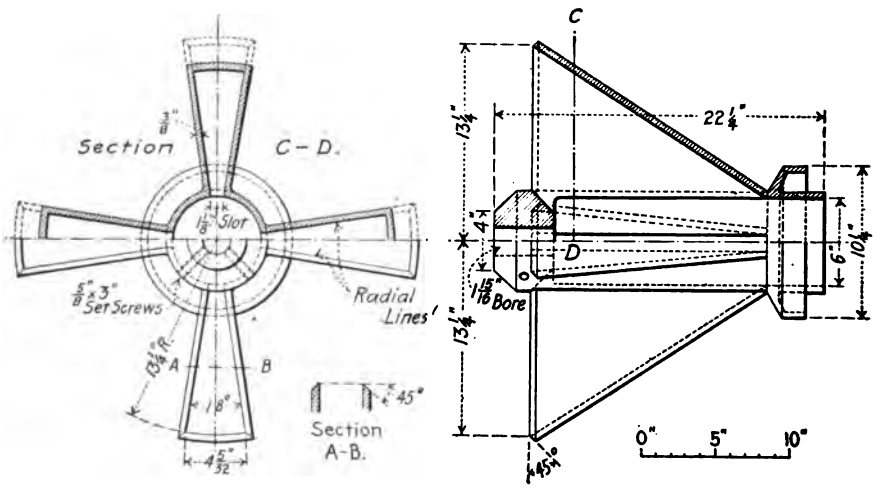

FIG. 49.

Vezin Automatic Sampler.—The automatic sampler most commonly used in the mills is the Vezin, two types of which are shown in the accompanying drawings, Figs. 48 and 49. Two sizes of steel plate sampler are shown, a 36- and a 48-in. size and a 4-arm all-cast-iron sampler. This type can of course be made with two arms, as are the steel plate samplers. The Vezin samplers are set vertically in front of the stream of ore to be sampled and at such a distance that the rear end of the revolving cutter is sure to be well out to the rear of the falling stream of ore. The front of the stream must also fall into the cutter with a liberal space in front of the center of the shaft. The opening of the cutters occupies the space between two radii of a circle whose center is the center of the vertical shaft. Let r be the distance, from the center of the

sampler, of any point in the cross section of the stream being sampled. Let R be the radius of the sampler and A the length of arc subtended by the sampler at the periphery. Then the length of arc subtended at point distance r is $\frac{rA}{R}$. Let V be the peripheral velocity of the sampler. The velocity at point distant r is $\frac{rV}{R}$ and the time for this point which is any point in the cross section of the stream to pass through the stream is $\frac{rA}{R}$ divided by $\frac{rV}{R}$ or $\frac{A}{V}$, and as both A and V are constants the time any point in the stream is discharging into the sampler is the same as any other point, consequently the sampler takes equal portions from all parts of the stream. It is assumed that the stream is everywhere of the same weight per unit of volume and is everywhere falling with the same velocity. This is sufficiently true for all practical purposes. If certain grains of ore travel faster than others from being given a rolling impetus in a long inclined spout, they will appear less frequently at the edge of the sample spout, but for all practical purposes the product of the velocity times the weight of a unit of volume of the stream will be the same at all points.

The only casting in the sheet metal samplers is the center which is shown in detail in the center of the drawing and is the same for the 36- and 48-in. sizes. The vertical sampler shaft is secured in the center of this casting. The vertical shafts for the two sizes are shown at the right with bevel gear attached. The samplers and shaft are supported above the cone by two bearings leaving the bottom of the sampler entirely free for the passage of the ore. As the sampler cutters pass through the stream the ore slides down into the center and out at the bottom through the 6- and 8-in. circular openings. From this point the ore can be spouted to a mixing cone placed below. The supports for the drive shaft with bevel pinion attached are not shown but would offer no difficulty in design; only a couple of light bridge trees are required, the spacings for which are indicated on the drawing.

The cast-iron design has a number of advantages not the least being that it is cheaper. The interior of this sampler can be lined with sheet steel to take the wear and should the cutting edges become worn, new ones can be made by bolting pieces of steel plate to the inside of the cutters. This form of sampler is supported at the bottom in the same manner as the sheet steel samplers. There is a cast curtain, shown in the drawing to protect the spout connection from dirt. The driving mechanism is above and consists of bevel gearing as in the sheet-steel samplers.

The rate of travel of the periphery of the sampler should not exceed 150 ft. per minute. For a 36-in. sampler the number of revolutions per minute should not exceed 15 or 16 and for a 48-in. sampler 12 r.p.m. Beyond these speeds centrifugal force will cause the ore to cling to the end of the cutter

or tend to be thrown out. The width of the cutter should not be at any point less than three times the diameter of the largest piece being sampled.

In concentrating mills the reduction by sampling is by tenths, a crushing operation following each sampling operation. For very difficult ores the reduction may be by fifths, thirds, etc. A handy rule to remember is that after each sampling operation the ore must be crushed to one-half the size it was before. For example suppose the capacity of the mill be 200 tons in 8 hours, and that this is the sampling period. Then sampling operations can be conducted in one of two ways. (1) The ore, after being crushed to 1 to 1–1/2 in. size is sampled by an automatic sampler taking one-tenth. The 20 tons of sample then passes into a cone from which it discharges into a set of 12 × 24-in. rolls, which reduces it to 1/2 to 3/4 in. size. Below the rolls a tenth is again taken, the sample being reduced to 2 tons. This after passing through a cone can be crushed either in a small pair of rolls or by some form of ore-grinding apparatus to 1/4 to 3/8 in. Then the sample is reduced to 0.2 tons by an automatic sampler following which it may be reduced by alternate shovels to 15 or 20 lb., then ground in a fine-grinding machine and riffled to a size suitable for grinding to 80 to 200 mesh giving the final assay pulp, weighing from 2 to 8 ounces. (2) In this mode of operating, suited especially to a rock house preparing the ore for concentrating operations, the ore after being reduced to a limiting size in the crushing plant may be run through a battery of sampling machines followed after each sampling operation by a cone or other device, to convert the cuttings into a continuous stream. If as before the capacity of the plant is 200 tons in 8 hours, and crushes to a limiting size of 1/2 to 3/4 in. then cuts reducing the sample to 2 tons, may be made without any crushing being necessary. As before, the 2-ton sample must be crushed to 1/8 in. before reducing by shoveling to 15 or 20 lb. weight preparatory to reduction to assay pulp volume.

Haultain Sampler for Wet Sand.—The riffle device of H. E. T. Haultain for reducing wet sand and slime samples is the best of its kind. By its use the amount of time and trouble in handling of the sample of sand and slime at the end of a shift is reduced to a minimum. I believe it is more accurate than the complete drying of a sample collected in a large settling tank or in a canvas conical filter bag. If desired, the sample can be run through the device from a small settling tank. This is the mode in which it is employed at the Detroit Copper company's mill at Morenci, Arizona.

The complete installation of teeter box, sampler tanks and reducing device as installed by Haultain at the Last Chance mill, northern Idaho, at the end of the sand and slime tailings launder merits description.

Water for operating the teeter box was first introduced into a little V-tank with a plug at the bottom for removing sand and one near the top for furnishing the actuating water under a constant head. At one end of the teeter box was secured an arm hinged so as to hang vertically. At the lower end of the

arm was mounted a plunger consisting of a circular piece of pine which fitted loosely in a prismatic box kept full of water. The function of this device was to prevent the tipping apparatus from accelerating in its to-and-fro movements. The teeter box actuated a carriage sliding on two horizontal rails placed about 18 in. apart. Little wheels were tried on these rails but gave trouble. On this account the carriage was provided with shoes which slid on the rails, these being kept well lubricated. Suspended from the carriage was the cutter which passed through the stream of tailings and took the sample. Attached to the teeter box was a Veeder cyclometer which counted the throws of the sampler, and by calculation it could be seen whether the sampler had worked smoothly or intermittently during a shift.

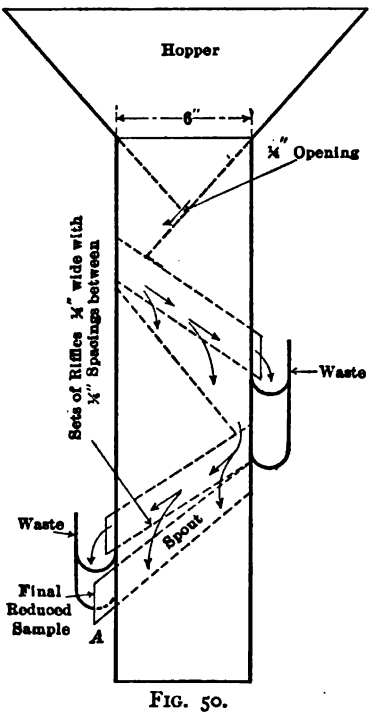

FIG. 50.

From the cutter the sample flowed into a series of five 5-gal. kerosene cans, arranged as are the zinc-precipitating tanks in cyanide works, one below the other. Each can was provided with a baffle of iron plate suspended in the middle. The overflow of each can into the one below it was through two small angular spouts soldered in V-shaped grooves cut from the front of the can at the top. The interval between cuts in this sampler was between 3 and 4 minutes. During this time the slime back of the baffle in the first can would settle fairly well but much better on the front or discharging side of the baffle. The same thing, but marked by progressively better settling, could be observed in the other cans. The last can discharged absolutely clean water. When the douse from the sampler came, slightly turbid water would be lifted from the first can into the second, less turbid water from the second to the third and so on with diminishing turbidity until the final overflow would be perfectly clean.

This system was thus a highly efficient intermittent settling device. The kerosene cans did not last long, although the water was only slightly acid. It was necessary to have a small army of boys gathering in cans and bringing them to the mill. It would have been far better if the series of small tanks had been made of substantial copper sheeting.

At the end of a shift the sampler was hung up, the time being noted. The first can, which usually was about two-thirds full of sand and slime, was lifted up and the surplus water poured through the reducing device shown in Fig.

50. The sand was loosened by pouring in water from a lower can of the series and the mixture poured through the reducer. The first can was finally washed perfectly clean with a jet of water pointed up into it from a hose mounted alongside the reducer and put back in place. The remaining cans in order were treated in a similar way with a view of using as little fresh water as possible. The four other cans usually had only an accumulation of sediment in them an inch or less deep. During these operations a can to receive the cutting rested under the lowermost set of riffles at *A*. The reducing device used in this sampler contained two sets of riffles and reduced the sample to a quarter; a third set of riffles would reduce a sample to an eighth. The riffles are inclosed and supported by two heavy sheets of copper, shown by the heavy lines in the drawing. If the contents of the cans at the end of a shift with the added clean water for washing them out amounted to 28 gal., then the sample at the first reduction would amount to 3.6 gal. On passing this through the reducer a second time the sample would amount to about 0.7 gal. The second cut was placed in a copper tray and a little hydrochloric acid added. In a few hours it was perfectly possible to siphon off the bulk of the water and the rest could be quickly removed by heating on a sand bath.

Dry Crushing and the Dust Problem.—In dry crushing plants, the dust which arises from the crushing and grading operations is not only exceedingly hurtful to the laborers, but may cause a serious loss in the metallic contents of the ore. In one case in my experience in the tropics, where the rock house was perennially open to the outer air at many points the dust loss was 1 per cent. of the total value of the ore and for a long distance from the crushing plant dust coatings on vegetation could be noticed. In cement mills using clay lime rock as in the Lehigh district, Pennsylvania, one may stand in a perfect haze of dust, objects but a short distance from the eyes being barely discernible and feel no discomfort from irritation of the mucous surfaces of the nose and throat and lungs. But in a rock-crushing plant reducing quartz or other hard ores the irritation set up in these sensitive parts, by sharp particles of rock, is oppressive and dangerous. The dust is very destructive to bearings and give the rock house an unsightly appearance. The main reason for the escape of dust about the rock house machinery is poor spoutings and housings. Fairly well seasoned lumber will continue to season or rid itself of moisture by being absorbed by dry powdered rock, especially if the rock contain any clayey portion. Under continued seasoning the boards of the spouting and housing will gap and warp, leaving apertures for the escape of dust. Housing and spouting must therefore be made of the best straight-grained and seasoned lumber obtainable and when repairs are made to any machine or spout due care should be exercised in seeing that all the joints are carefully in place and dust tight. Careless replacement of spouts is a great source of the dust nuisance. The senseless practice of leaving a spout open at the rolls so that quick action

may be obtained in case these machines choke, should be avoided. It will be better to have a hinged door at this point which may be thrown back should it be desired to remove a piece of iron which has become lodged between the roll faces. For a distance above the rolls the spout leading into it should be made detachable and secured to a fixed portion above it by tie bolts which may be tightened when the spout is put back in place after rolls are repaired. If the portion of the spout near the rolls is barred out at the repair time, the ends being split and warped in this proceeding and it is secured by spiking, a tight joint cannot be made either where the removable spout connects with the fixed spout above, or at the housing of the rolls. A better mode of securing spout covers than by nailing them to the side boards is illustrated in Fig. 51. The cleat *A* shown in the figure can either be nailed to the covering board or to the side of the spout. In either case strips of folded burlap should be introduced between the cleats and the sides and top of the spouting. Fastening the cleats to the cover of the spouting is somewhat preferable as it is apt to be damaged in removing liners if attached to the spout. In making repairs on spouts the attendant should carry a small pot of paint to cover up finger marks and scratches on the wood. New spouting should be painted in the carpenter's shop before putting in place. To make temporary repairs of spouts through which a hole has been worn, chisel or saw out the more or less circular opening to a rectangular one and fill with a block of wood faced with a piece of steel liner; the face of the steel plate should be flush with the bottom of the spout. Hold the block in place with a covering piece of wood screwed to the bottom of the spout and smeared with a thin coat of water putty. Wipe off the water putty and touch up with paint. Wads of waste stuffed in holes in spouting are the resort of the shiftless.

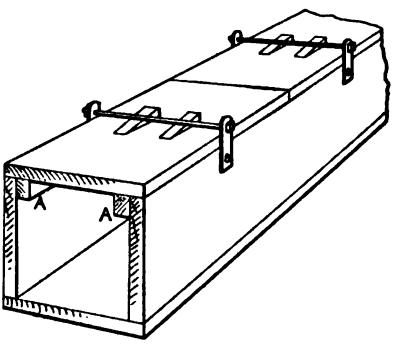

FIG. 51.

If the elevators of the crushing plant be fed by a conveyer belt the problem of dust prevention becomes quite serious. A conveyer belt is one of the few machines about the rock house which cannot advantageously be housed and if not housed a cloud of dust is sure to arise at the point where the ore discharges into the elevator. Housing the belt back a few feet from the point where it discharges into the elevator will, however, militate to some extent the dust evil. If the ore has a quartzy gangue, quartz, granite, sandstone, quartzite, etc., a spray may be introduced at the point where the ore enters the elevator. If the gangue consists of basic igneous rocks containing a large proportion of feldspars or other silicate and particularly if these be partially decomposed, or of rocks containing a large portion of kaolin, such as clay

slates, etc., then a spray will not be permissible for such gangues will become a mucky mass even with a small percentage of water. The spray water must be applied with great caution so as not to wet the ore and to this end some form of atomizing apparatus will be found preferable to a series of fine jets playing directly upon the ore. Where the wash water is perfectly free from solid matter or salts which oxidize rapidly such as ferrous sulphate then the device illustrated in Fig. 52 makes a very perfect atomizer. A nozzle atomizer may also be used. In either case to get a good atomizing effect the water must be under considerable pressure. Dust settles rapidly in an air charged with fine particles of water.

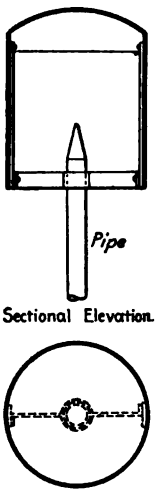

FIG. 52.

The open mouths of breakers are other places where it is difficult to prevent dust arising. In most cases these machines cannot be fed without an attendant to watch the feeding and this necessarily involves having the crusher opening exposed. Where it is possible to enclose the mouth of the crusher and a mechanical feeder, the difficulty of making a dust tight construction is very great. Occasionally the dust evil at the breaker mouth can be partially overcome by using atomizers below the breaker. As a rule very little dust will be made by the breakers, as the ore at the stages it reached them is quite coarse and often the fines have been removed by screening. A long drop of crushed ore and undersize in a spout to a belt or elevator joining the crushed stream below the breaker, causes clouds of dust to rise through the crusher mouth, but this may be overcome by proper designing. Good designing and good superintendence will do much to abate the dust nuisance.

Suction Fan and Piping.—There remains to consider the mode of keeping down the dust by means of a suction fan and piping. Installation of such a system has numerous disadvantages, the most serious one being that the pipes are in the way, for to insure no lodging of dust in the pipes they must stand at angles of 60 deg. . Fan systems are not needed in crushing plants unless the limit of crushing is in the neighborhood of sand sizes. If there be a battery of crushing machines arranged along the same foundation line and having suction intakes at the same general height, then in order to reach the vacuum box from the bottom of which will pass the main pipe leading to the fan, the individual pipes or risers on a 60 deg. inclination must go up to a great height above the crushing machine or to a great depth below them in order that all may reach the junction point at the suction box. If an alternative plan is adopted of piping a group of crushing machines to a separate vacuum box, then separate pipes will be required from these group vacuum boxes leading directly to the fan or joining into a main leading to the fan. This mode of arrangement will reduce the head room required between the crushing ma-

chines and the vacuum boxes but increase that from these points to the fan so that the total head room required is practically the same in either case. Separate vacuum boxes will be required for the screens, elevators, etc. From this brief description it will be readily imagined how the multitude of pipes required for a vacuum system will clog the head spaces of the rock plant, and how much they will be in the way in moving repair parts from one part of the plant to another. In the case of rolls the vacuum pipe must pitch directly into the side of the boxing over these machines, without any bend. Where the point of departure of the vacuum pipes is at a space open at one side as for example the mouth of a Blake crusher, or the end of a conveyer belt where it discharges into an elevator, etc., the effect of the vacuum will be very slight, for the velocity of the cloud of dust will be sufficiently great to cause it to pass by the vacuum pipe and out into the air of the crushing plant. This forms another disadvantage of the vacuum system in that at the points where it is most desired to entrain the dust, it is not effective. The use of elevator housings as vacuum boxes to simplify the piping and reduce the number of pipes has been suggested to me. The pipes used are

WEIGHTS OF GALVANIZED IRON PIPE IN POUNDS PER FOOT[1]

Diam. of pipe in inches	Gauge of iron				Diam. of pipe in inches	Gauge of iron			
	No. 24	No. 22	No. 20	No. 18		No. 22	No. 20	No. 18	No. 16
4	1–1/2	1–5/8	2	2–3/4	28	11–3/8	14	18	21–1/2
5	1–3/4	2	2–1/2	3–3/8	30	12–1/4	15	19–3/8	23
6	2–1/8	2–1/2	3	4	32	13–1/8	16	20–3/4	24–5/8
7	2–1/2	3	3–1/2	4–5/8	34	14	17	22–1/4	26–1/4
8	2–7/8	3–3/8	4	5–1/4	36	15	18	23–3/4	28
9	3–1/4	3–3/4	4–1/2	6	38	16	19	24–1/2	29–1/2
10	3–1/2	4	5	6–1/2	40	17	20	26–1/4	31–1/4
11	3–3/4	4–1/4	5–1/2	7	42	.....	21	28	33
12	4	4–5/8	6	7–1/2	44	.....	22	29–3/4	35
13	4–1/4	5–1/8	6–1/2	8–3/8	46	.....	23	31–1/2	37
14	4–5/8	5–1/2	7	9	48	.....	24	33–1/4	39
15	5	6	7–1/2	9–5/8	50	.....	25	35	41
16	5–1/2	6–1/2	8	10–1/4	52	.....	26	36–3/4	43
18	6	7–1/4	9	11–1/2	54	.....	27	38–1/2	45
20	6–1/2	8	10	12–3/4	56	.....	28	40–1/4	47
22	7–1/4	8–3/4	11	14	58	.....	29	42	49
24	8	9–5/8	12	15–1/4	60	.....	30	43–3/4	51
26	8–3/4	10–1/2	13	16–1/2	.....	.....	.....	.....	.....

Above table will be found substantially correct, allowance being given for rivets, lap and solder, also waste or trimmings.

[1] Garden City Fan Co.

commonly light galvanized iron put together like stove lengths and are easily disturbed by a chance blow and will not be tight under service unless they are looked after periodically. In numerous places about dry separating mills where the ore is finely ground and contains a large proportion of very fine dust, as for example about magnetic and dry table separating plants, a vacuum system is obligatory and will help abate the dust nuisance. The use of fan systems is infrequent outside of plants of this kind. The gauges recommended for the different size galvanized pipes are given in the preceding table.

No pipe less than 4 in. in diameter should be used in any part of the system. In order to make the computation of size of pipes clear and to determine the size and horse power of exhauster required, some calculation will be entered into for an exhaust system for four machines set 15 ft. apart. The first problem is to determine the various lengths of pipe for the different risers and the diameter of the main. It will be assumed that the vacuum box is directly over the center of the foundation line of the four machines, then to determine the distance from the two end intakes to the vacuum box we have to find the sides of an equilateral triangle whose base is 60 ft. and whose angles are 60°, which, is of course, 60 ft. In the case of the two intermediate machines, since the altitude of the first triangle is 51.96 ft., we can determine the length of the intermediate risers by solving the right angled triangle of base 15 ft. and altitude 51.96 ft. and the lengths of pipe in even feet become 54. Let it be further assumed that a pressure of 0.145 ounce is to be maintained at the intake of each machine, then taking the 54-ft. length with diameter of 4 in. and allowing for a 60 deg. elbow, it will be found that the loss is 0.61 ounce, calculated from the following formula (Buffalo Forge):

$$F = \frac{l}{50d}\left(\frac{V}{5200}\right)^2$$

Where F is the loss of pressure in ounces,
V is the velocity in feet per minute,
l is the length of the pipe in feet,
d is the diameter of the pipe in feet, *i.e.*, $\frac{l}{d}$ equals length of the pipe in diameters.

The velocity in feet per minute can be taken from the accompanying table.

In the computation by which it is determined that the loss of pressure due to friction is 0.61 ounce, the length of pipe used is 72 ft., 54 ft. from the point of ingress to the vacuum box, and 17 ft. representing the friction in the 60° elbow equal to that of a length of pipe of 50 diameters, and 1 ft. for the portion above the bend ending in the vacuum box. On substituting 0.61 in the formula, placing l at 60, and the factor for friction in the elbow equal to a length of 50 diameters, and adding an extra foot as before it will be found that the diameters of the longer risers have to be 4.3 in. in diameter in order that they may

CORRESPONDING PRESSURE AND VELOCITIES OF AIR AT 50° F.

Inches water pressure	Ounces pressure	Velocity feet per minute	Inches water pressure	Ounces pressure	Velocity feet per minute
1/32	0.01817	698	3.0340	1.75000	6,061
1/16	0.03634	987	3.4680	2.00000	7,338
1/8	0.07268	1,393	3.9920	2.25000	7,787
3/16	0.10902	1,707	4.3350	2.50000	8,213
1/4	0.14536	1,971	5.0680	2.75000	8,618
5/16	0.18170	2,204	5.2020	3.00000	9,008
3/8	0.21804	2,414	6.0690	3.50000	9,739
0.4335	0.25000	2,582	6.9390	4.00000	10,421
1/2	0.29072	2,788	7.1030	4.50000	11,065
5/8	0.38340	3,118	8.6700	5.00000	11,676
3/4	0.43608	3,416	9.5370	5.50000	12,259
0.8671	0.50000	3,658	10.4040	6.00000	12,817
7/8	0.50870	3,690	12.1380	7.00000	13,874
1.0000	0.58140	3,946	13.8720	8.00000	14,361
1.2500	0.72670	4,362	15.6060	9.00000	15,795
1.3005	0.75000	4,482	17.3400	10.00000	16,684
1.5000	0.87210	4,836	19.0740	11.00000	17,534
1.7340	1.00000	5,175	20.8080	12.00000	18,350
1.7500	1.01740	5,224	22.5420	13.00000	19,138
2.0000	1.16280	5,587	24.2760	14.00000	19,901
2.1670	1.25000	5,792	26.0100	15.00000	20,841
2.6310	1.50000	6,349	27.7500	16.00000	21,360

have the same inlet pressure as in the case of the shorter 4-in. pipes. For practical purposes 4 in. will also be adopted for the diameter of these long risers the computation of the diameter being made simply to show the mode to pursue where the variation in lengths would cause greater variations of intake pressure. Combining the cross-sectional areas of the four pipes gives 50.28 sq. in. equal to the cross-sectional area of an 8-in. pipe, consequently this size of pipe is adopted for the main leading to the blower on the principle that where pipes join the one which leads away from them must be at least the cross section of the pipes before junction.

The pressure in the main at the point where it leaves the vacuum box must of course be the sum of 0.145 ounce, plus 1.97 ounce or 2.12 ounce. Let it be supposed that the main must be 60 ft. long in order to reach the exhauster. Then, as before, substitution in the formula already given with velocity of 1971 ft. per minute, the additional pressure for overcoming friction in the main is obtained, viz., 0.26 ounce pressure. The total pressure which must be maintained at the fan end of the piping system to have pressure of 0.145 ounce at the other end of the system is 2.38 ounces. The area of the blast is given by rule 2, page 128. The diameter of the fan may be taken as 73 per cent. of the size of the fan in inches and the width as equal to the dimension L (see table on page 130). The peripheral velocity of the fan is given by the ratio of the cross sectional area of the 8 inch pipe to the area of the blast times 8000. If a 30-inch fan be used the velocity of the tips of the blade becomes 4079 feet per minute and the r.p.m. 709.

TABLE AND RULES FOR ESTIMATING FAN CAPACITIES AND POWER REQUIRED AT DIFFERENT PRESSURES

"A"	1/4 oz.	1/2 oz.	3/4 oz.	1 oz.	2 oz.	3 oz.	4 oz.	5 oz.	6 oz.	7 oz.	8 oz.
"B"	2,585	3,658	4,482	5,174	7,338	9,006	10,422	11,676	12,817	13,873	14,861
"C"	18	25	31	36	51	63	72	81	89	96	103
"D"	0.002	0.005	0.008	0.015	0.042	0.077	0.118	0.166	0.218	0.276	0.338

RULES FOR USING THE TABLE AS FOLLOWS

Rule 1.—Column "B," divided by circumference of Fan Wheel (in feet), gives speed necessary to maintain pressure directly above it in column "A."

Rule 2.—Diameter of Fan Wheel (in inches), multiplied by width of same (in inches) at periphery, divided by 3, gives area of blast in square inches. In wheels larger than 66 inches in diameter, 5 per cent. should be deducted from this quotient.

Rule 3.—Column "C," multiplied by area of blast in square inches, gives capacity in cubic feet per minute at pressure directly above in column "A."

Rule 4.—Column "D," multiplied by area of blast, gives theoretical horse power required to drive Fan.

The above rules and table apply only to centrifugal Fans and Blowers, not to the style of Fan known as the Disc or Propeller Fans or Positive Blowers.

For altitudes other than sea level, corrections for pressure may be made from the accompanying curve (Fig. 53) showing the falling off of pressure with altitude.

For air exhaust work the common fan used is a plate steel exhauster; these can be obtained in a variety of sizes with discharge openings pointing at different angles or with double discharges as is shown in Fig. 54. A dimension sheet for an exhauster with left, top horizontal discharge is shown in Fig. 55.

For dust collection, cyclones or stocking collectors may be used. All the principal manufacturers of grain cleaning machinery make these devices. The cylcone adds little to the duty as the dust laden air enters tangentially in a metal inverted cone, the dust-free air rises through the center and the dust is thrown to the periphery and settles to the point of the cone. Where the air must be forced through cloth as in a stocking machine the increase of pressure may be comparatively great and the speed of the fan must be increased over that required to maintain the proper pressure in the pipe lines. In some measurements made by me on an exhaust system the manometer registered a minus pressure of 5/8 ounce at the fan on the main pipe side; just in front of the stocking machine a plus pressure of 3/16 ounce. The stockings were shaken once a shift. Where positive filtration is employed it will be best to employ a fan one or two sizes larger than is called for by the duty of maintaining pressure in the pipe lines and in making preliminary estimates of the horse power to allow one-third increase in pressure for the collector. After the fan is installed it can be speeded to the proper number of revolutions for maintaining the inlet pressures at the ends of the pipes. The subject

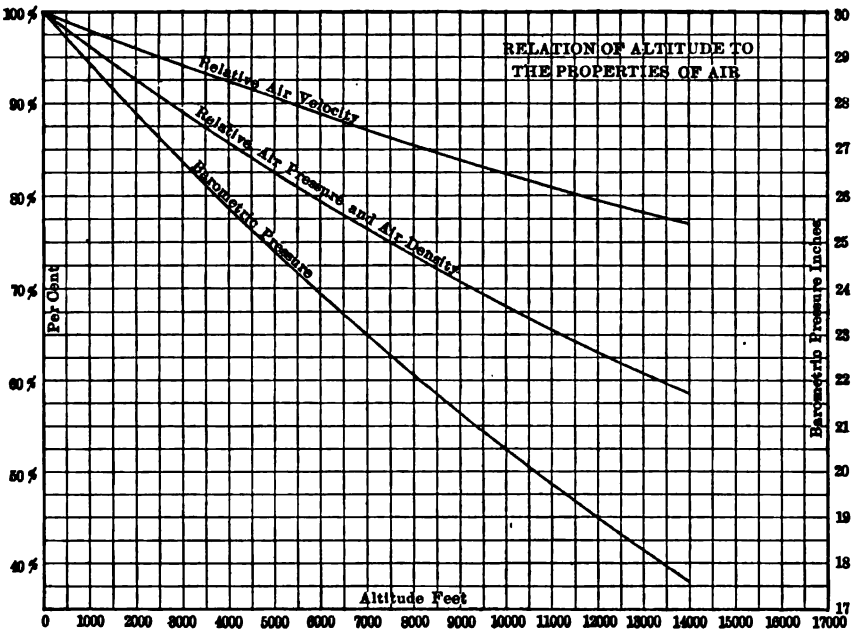

FIG. 53.[1]

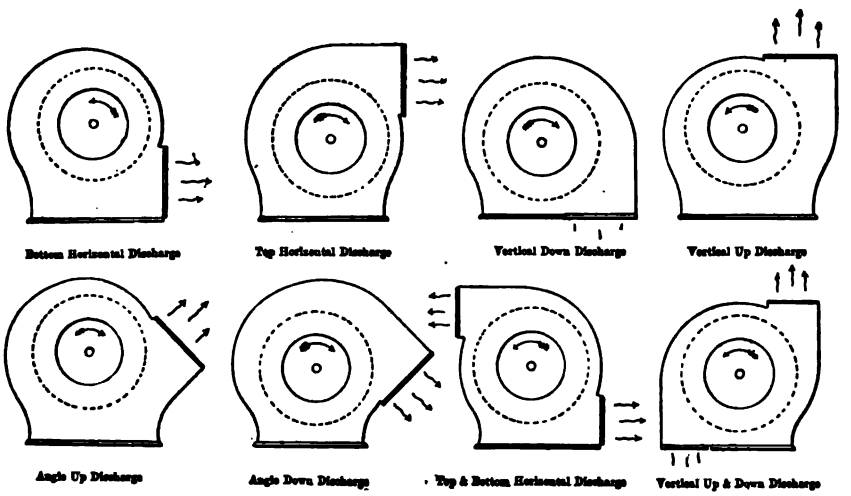

FIG. 54.

[1] Buffalo Forge.

of dust collection by an air exhaust system is not of sufficient importance in concentration to warrant a discussion of theory. The theoretical knowledge to be had on the subject will be found in treatises on fans and blowers, heating and ventilation, Kent's Mechanical Engineer's Pocket Book, and many of the catalogues of manufacturers of mechanical draft machinery.

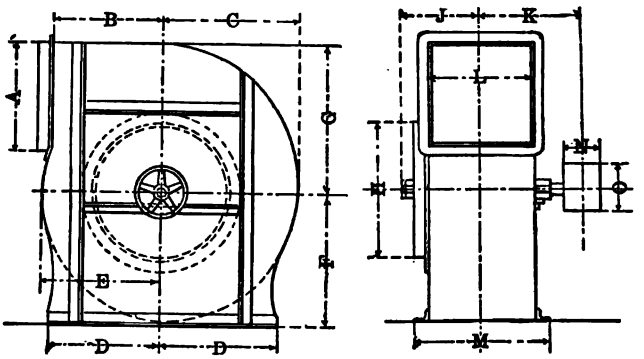

WITH OVERHUNG PULLEYS. RIGHT-HAND TOP HORIZONTAL DISCHARGE

Size in inches.	A	B	C	D	E	F	G	H	J	K	L	M	N	O	Weight
30	11-1/4	11-7/8	14-3/4	11-7/8	12-3/4	14-1/2	15-3/4	14-7/8	10-3/8	11-7/8	11-1/4	15-1/4	3	7	242
35	13-1/2	13-7/8	17-3/16	13-7/8	14-15/16	16-13/16	18-5/16	17	11-7/8	13-3/8	13-1/2	17-1/2	3	7	300
40	15	15-15/16	19-5/8	15-15/16	17-1/8	19-1/8	20-7/8	19	12-7/8	14-3/8	15	19	3	8	399
45	16-1/4	18	22-1/16	18	19-5/16	21-7/16	23-7/16	21-5/8	13-1/8	15-1/8	16-1/4	20-1/4	3	8	526
50	18-1/2	20	24-1/2	20	21-1/2	23-1/2	26	24-3/4	14-1/2	17-3/8	18-1/2	22-3/4	4	9	654
55	19-3/4	22	26-15/16	22	23-11/16	26-3/8	28-9/16	26-3/8	15-7/8	18-1/2	19-3/4	24	4	9	734
60	22-1/4	24-1/16	29-3/8	24-1/16	25-7/8	28	31-1/8	26-7/8	16-7/8	19-1/2	22-1/4	26-1/2	5	10	814
70	26	28-1/8	34-1/4	28-1/8	30-1/4	37-3/4	36-1/4	34-1/8	19-1/4	22	26	30-1/4	5	11	1158
80	29-3/4	32-3/16	39-1/8	32-3/16	34-5/8	37-3/4	41-3/8	39-1/2	21-1/4	24-1/8	29-3/4	35	6	12	1457
90	33-1/2	36-1/4	44	36-1/4	39	44	46-1/2	43-1/4	23-1/4	26-1/2	33-1/2	38-3/4	6	14	2143
100	37-1/4	40-5/16	48-7/8	40-5/16	43-3/8	47	51-5/8	46-1/4	25-1/2	28-7/8	37-1/4	43-1/2	7	16	2525
110	41	44-3/8	53-3/4	44-3/8	47-3/4	51	56-3/4	51-3/4	28	31-5/8	41	47-1/4	7	18	3204
120	44-3/4	48-7/16	58-5/8	48-7/16	52-1/8	56	61-7/8	55	30-1/8	34	44-3/4	51	8	20	3865
130	48-1/2	52-1/2	63-1/2	52-1/2	56-1/2	61	67	60-3/4	33	36-1/2	48-1/2	54-7/8	8	22	4939
140	52-1/2	56-9/16	68-3/8	56-9/16	60-7/8	65-7/8	72-1/8	64-3/4	35-1/8	39-3/8	52-1/4	59-5/8	9	24	6105
150	56	60-5/8	73-1/4	60-5/8	65-1/4	70-3/4	77-1/4	69-1/2	37-1/2	42-1/8	56	64-3/8	10	26	7556

FIG. 55.[1]

[1] Buffalo Forge.

CHAPTER V

SEPARATING PLANT

The complexity of arrangement of machinery in the separating mill is in direct ratio to the limit of crushing. That is the coarser the ore is crushed the more complex are the machinery arrangements. Where the ore is crushed to about 20 mesh, before separation, the arrangement of the concentrating machinery is quite simple. The slope of the mill site will diminish as the limit of crushing preparatory to separation becomes lower, for as has been indicated under the chapter on testing, the greater the degree of preliminary crushing the more simple and direct become the separating operations. Increase in the number of commercial minerals to be saved also increases the complexity of the mill arrangements and when this is coupled with a high crushing limit, the most complex type of concentrating mill must be evolved and the utmost skill of the metallurgist is taxed in producing a successful separating plant.

Where the limit of preliminary crushing is high and concentration proceeds by stages, a crushing operation being followed by a separation and this by another crushing operation, there is but one mode of treatment which is most economical, viz., by water concentration by employing jigs as first dressing machines. In a mill equipped with jigs the ore will usually be elevated from the mill bin to a battery of sizing screens, the various oversizes of which pass to jigs for the preliminary concentration. Middlings result from the jigging and these are commonly sent to crushing rolls for a reduction in size. It is at this point that the great error arises in design and examples of it can be seen in a great many mills throughout the continent. The error lies in this that the crushing rolls are set under and behind the jigs whereas they should be located below and in front of these machines. This error arises first from the violation of the principle already laid down that the crushing plant for preliminary crushing should be distinct from the separating structure. Almost universally the small mill is located at the bottom of the mountain side, and the preliminary crushing and separation are accomplished under the same roof, and as it is a decided advantage to locate the crushing machinery on a slope the sloping ground is given up to the crushing machinery and the separating operations are carried on on a flat piece of ground at the base of the hill. Of course there is usually nothing to hinder the metallurgist from placing preliminary crushing machinery on the hillside so that the separating machinery can be arranged below on sloping ground. If this arrangement is adopted and particularly if the lower portion of the hillside

slopes more gently than the upper where the crushing machinery is located, then the layout of the plant would be in general accordance with my ideas of what is the best site. This is not done, however, for in the majority of small mills the jig floor is built at some height above the lowermost floor where are placed regrinding rolls or other comminuting machinery. Why this is done cannot be answered on the score of economy of space, for less structural material will be required to house an extra length of mill to accommodate the different sections of machinery placed on a line than would be necessary to raise the mill to the increased height necessary, when the different sections are superimposed upon one another. The principal reason for the ordinary procedure in design of small mills arises from the expedient of always dropping the coarsest jig middlings, and often all, including the finest, into the boot of the elevator raising the ore from the main mill bin, or in other words the middlings are brought back into the original mill stream and are again screened and jigged on the same machines from which they arose. The direct evil resulting from this practice will be discussed at length later. It results in a closed circuit. Why this expedient is adopted will be seen from a description of the alternative method.

In this method the jigs rest upon the ground or partly on a floor resting on the ground and partly on a suspended portion of the floor. The regrinding machinery is set ahead and below the jigs. The test work has indicated that it will be profitable to rejig the reground middlings. There is a choice of having a second jig floor with screens above it below the regrinding machinery or of returning the middlings to a battery of screens paralleling the first and with jigs below them and paralleling those giving initial treatment to the ore. It will be preferable to resort to the second arrangement and have all the screens and jigs together making the mechanical arrangement of the mill simpler, reducing the operative labor and making the task of supervision lighter. The disadvantage is that the middlings must make a 270 deg. turn to bring them to the second line of screens and this coupled with the distance from the head of the screen lines at which the middlings emerge from the regrinding machines, will make considerable losses in head room. This is not so serious a matter as appears at first glance because a small number of screens will be required in the second line and the middlings being in a finer state of division, less slope of the launders will be required to transport them to the other arrangement. Where the regrinding machines are set below and directly under the jig floor, it is only necessary after regrinding the middlings to spout them to the main elevator when they are disposed of and the mechanical arrangement of the mill becomes simpler than the proper one and it is this gain in simplicity which has stereotyped the design of the average small jig mill. As to why it would not be preferable to place the rolls below the jig floor and spout to a second elevator placed in the rear or below the jig floor, the answer is that on the sloping sight a return up hill would be out of the question owing to the expense of excavation and revetments; and, on a

flat site the poor operative conditions which would prevail on the roll floor, as lack of light, jig floor supports being in the way of repair operations, and men and machines subjected to the all pervasive drip of the jig spouts when passing under the jig floor. Further to support and accommodate the jig floor, the whole framing of the mill must be made unnecessarily heavy. There would be no objection and a decided advantage, however, on a flat site in having the rolls and elevator located entirely to the rear of the jigs, the jig floor being elevated. To my mind the advantage of a sloping site lies entirely in this, that the bulk of the heavy machinery may be supported entirely on terra firma.

More than one secondary jigging operation will pay but very rarely. Indeed I know of no mill on the continent where more than two are employed. The second stream of middlings will pass to rolls or mills of various types and these may be arranged alongside the regrinding rolls, bringing all the regrinding machinery together and allowing of a simple arrangement for repairing. Below the regrinding level the streams of direct ore, from the undersize flow of the last trommel in the first line, or from the overflow of jig classifiers, should be kept separate from the middlings flow, the former not being mixed with the latter, until it has passed through one separating operation. After each flow of sand and slime has received treatment on separate sets of appropriate machinery, they may be combined for a second treatment possibly after a comminuting operation, but they should never after regrinding be returned to the machines from which they came, the only permissible departure from this rule being in the ultimate slimes treatment when it will be a question of keeping a small amount of rich pulp in circulation or allowing it to go to waste.

Location of Retreatment Floor.—The question of the location of the retreatment floor for sands and slime is largely the choice of the metallurgist. The direct treatment floor may be placed directly over the retreatment floor or the latter may be placed ahead of the former. Where tables and vanners are employed and the mills of wooden construction, it is difficult to make the frame sufficiently rigid to resist the vibrations set up by these machines if they are mounted on the second floor of a two-story structure. A steel frame does not, however, offer any difficulty of this sort. The two-story arrangement lends itself very nicely to a site with a flat portion at the bottom of a hill side, particularly if there be enough additional space for auxiliary buildings and railroad tracks. It is advantageous to extend the axis made by the screens or screens and classifiers into the lower portion of the mill carrying the classifiers and dewatering apparatus in two or more parallel lines along these axes and feeding to machines on either side, the concentrating machines being arranged in single lines with the concentrate discharge end to the windows. This mode of arrangement can be employed to best advantage where the slimes and sands portion of the mill is located on flat ground, for on sloping ground the floors will ultimately come too high off

the ground if the banks of tables were carried any great distance forward. To accommodate the system to sloping ground, the pulp streams must be turned and caused to flow at right angles to the original direction of flow and the slime and sands building form an L addition across the bottom of the upper structure of the mill. This type of design is often seen and offers no particular disadvantages other than the loss of head room necessary to turn the pulp stream to one end or the other and in case new units were added to the mill, such projecting structures would be in the way of the new ones.

It is not deemed advisable to go into further detail concerning the layout of the mill. There is often but one available mill site which is far from ideal, and the flow-sheets for different ores vary so widely that rules for arrangement covering every case cannot be laid down. For the most complex type of separating mill those where two commercial concentrates must be made and where a high limit of crushing is permissible, a sound mode of arrangement has been outlined. Less complex flow sheets will offer less exercise of ingenuity on the part of the designer. The aim should be ease of access to all parts of the superstructure and machinery and plenty of light. Ease of access requires much uninterrupted head room above the machinery; roomy passages between the machines; broad easy stairways with few turns; few floor levels, and as little fall between the lowest and topmost level as possible. Stairways are usually an afterthought in the design when they should be an integral part of it as was remarked in preceding chapter. As far as possible, machinery should be driven from countershafts located below. The spouting leading away from the machinery can almost always be carried below this level, and water piping always without exception.

Cost of Building.—It is well known to insurance men that the extra cost of steel-frame buildings as compared to wooden structures is more than offset by the less insurance required to be carried on the former type. In an estimate of costs prepared for a fireproof-steel milling plant, the cost for steel structural work was 40 per cent. of $70,000 or $28,000, the capacity of the plant being 200 tons per day of 24 hours, and of the separate crushing plant 300 tons in 24 hours. The cost for steel work includes both the crushing plant and the mill proper. It was estimated that the same structure of wood and with wooden floors would cost one-fourth less or $21,000. The insurance rate on the wooden mill would be $3 per hundred per year or $1890 per year, while that on the steel frame at $1.50 per hundred per year would total $1050 per year, a difference in favor of the steel mill of $840. This sum set aside yearly less simple interest on $7000 at 4 per cent. and compounded at 4 per cent. interest, would equal $7000, the difference in cost of the two plants in a trifle over ten years.

Formula: $560 = \frac{7000 \times 0.04}{(1+0.04)^n - 1}$, or $(1.04)^n = 1.5 +$ or $n = 10.3$ years.

The destruction of the wooden mill by fire would entail a loss due to stoppage

of mining operations difficult to estimate but great in amount. The interest on the stoppage of dividends for six months of a mine paying $300,000 a year in dividends would amount to $3000, nearly half the difference in the cost of the two types of mill.

Mill Structure.—The remarks which have been made on foundations in the previous chapter will apply generally to any mill structure. If a wooden structure is decided upon, a full-framed wall structure will be found to meet the problems of arrangement most simply. This style of frame is of so venerable antiquity that little description is needed here. A cut of it from Clark's "Building Superintendence" is shown in Fig. 56 and descriptions will be found in all works on building construction and joinery. For mill work the sill braces are omitted and studding is not employed freely, for there are only the outer walls and windows to support and not the weight of lath and plastering with close spaced supports for attachment of laths required to finish a dwelling house. The space between wall plates is usually filled in with studding to a sufficient degree to afford nailing surface for wall boards covering the frame and supports for the windows. Within the mill structure the posts are disposed on a rectangular plan and are connected by caps and sills. As in the case of the wall plates the posts are braced at the top from the caps. The interior braces are four in number, two short and two long, one pair being joined to the caps resting on the posts directly and the other pair to the caps crossing the first set. Floors are carried on joists on top of the upper set of cap timbers and the various tiers of posts morticed to the caps. The conventional way of arranging the posts is to have those in the interior of the mill as well as the wall plates occupy corners of equal sided squares from 12 to 18 ft. apart. Sufficiently heavy timbers are chosen so that regardless of the distribution of the weights of machinery floor, etc., the posts will be amply strong to bear them. An experienced millwright will by instinct set his posts with sufficient spacing to provide an ample factor of safety, but the metallurgist will do well to compute the spacing though generally not departing from the convention that the spacings must be equal. For mills which rise two posts high, the general convention is 12 × 12 posts for the two tiers, and for tiers above this unless some special problem requires heavy or vibrating machinery at this height lighter posts. If merely to support an inclined roof, a course of 8 × 8 posts will probably be ample. (See Fig. 56a.) These matters of sizes should not, however, be left to rule-of-thumb figures, but the weights and strengths of the members calculated according to the well-established theories for columns and girders. The

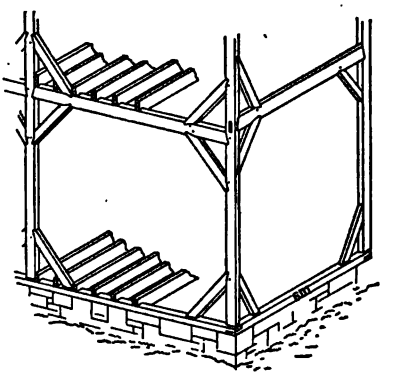

FIG. 56.

final plans being prepared, showing the weights and position of all machinery, the supporting members should be recalculated. Glaring errors of underestimation of strength will often be detected if this is done. For column footings, reference should be made to Chapter III. In small mill structures the quarter pitch roof is generally employed where a mill is located on a hillside, but if the ground is quite steep, the pitch of the roof will more nearly follow that of the mill site. A roof sloping more or less

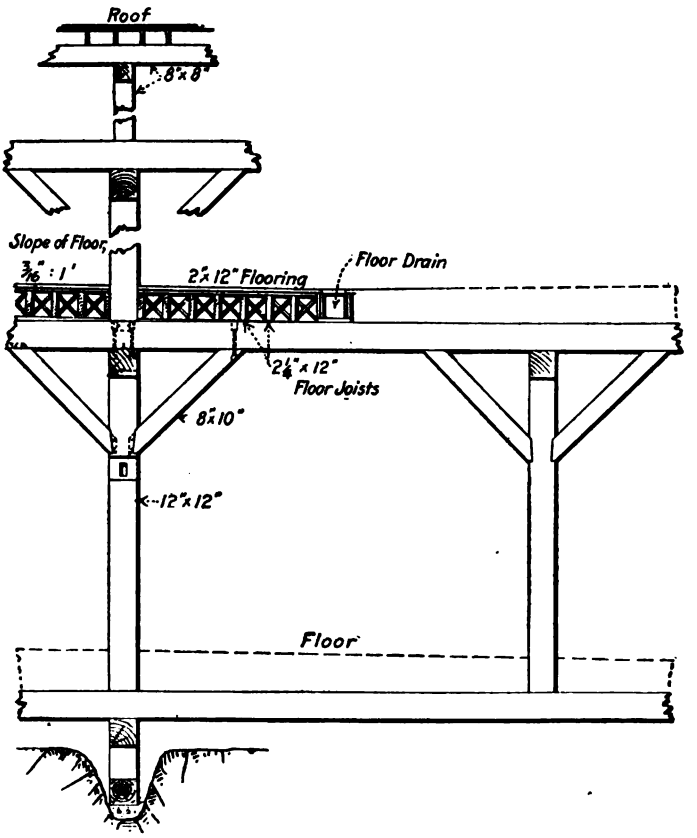

FIG. 56a.

parallel to a hillside requires no supporting trusses, the roof receiving support from girders laid across the upper tier of posts. Shingles or corrugated iron are used for roofing material. Where roofs slope with the axis of the mill, the design of the mill structure will frequently lend itself to breaks in the roof line allowing a range of windows being placed between the two portions and yielding more light and a more pleasing design. Where double pitched roofs are employed as will be advisable on a flat or gently sloping site, roof trusses must be employed for the design of which standard works dealing with this subject should be consulted. The walls of wooden mills are usually

of two thicknesses of 1-in. lumber laid overlapping, with building paper between the two layers and with the edges of the boards of the outer layer covered with battens. The wall boards are spiked to the wall plates and the studding which fills in between. Corrugated iron may replace the wood and the studding must be arranged so that the squares can be nailed conveniently. Floors in wooden mills are always of wood and an ideal lumber for this purpose is Southern pine. For a water-tight floor such as is necessary in most parts of a wet concentrating mill, the floor may be laid in a double thickness, the lower floor being of light lumber and overlaid by heavy mill flooring. Mill floors which have to be hosed should be laid with a slope of 1/8 to 3/16 in. to the foot so as to drain well. The drains should be covered with removable boards flush with the floor and should slope toward the nearest elevator.

Mill Plans.—In drawing plans either for wooden or steel mills, separate sheets should be made showing the location of water pipes, steam pipes and radiators if the mill be located in a cold climate, and the wiring for the electric lighting system.

Should a steel frame be decided upon it will be best unless the designer is an expert in that branch of engineering, to entrust the designing to a manufacturing firm who make a specialty of this kind of work. There is the disadvantage in this procedure of having the contractor prepare his own plans, but the experience of many with well-known steel and bridge companies, has been that they take so much pride in their engineering that no danger of excess structural material being used need be feared. The cost of preparing a set of structural drawings by the metallurgist and assistants will often be found enough greater to offset the differences in contract price which would prevail if the plans and specifications were open to bid. The basis of settlement is by the pound and all factors such as differences in freight, etc., considered, there is very little difference in the prices which will be named by various manufacturers for any structure. For the structural designer a plan and elevation must be prepared showing the position of all machinery foundations where resting on the ground, the position of machinery with weights, the outline of building desired, and a window and door plan. Foundations whether located and designed by the metallurgist or by the structural engineers, must be placed by the mine. Only after foundations are all in place can the erection of the superstructure begin.

Motive Power.—The choice of a prime mover is one that is nearly always fixed by the location of the mine. The best and cheapest power for a mill is water power, second hydroelectric power and steam or gas power. So far as mine plants are concerned, the choice between gas and steam will depend upon the cost of fuel; where fuel is cheap, steam will still be preferred to gas power whether generated by coal, wood, light or heavy oils. Water power makes the ideal power when there is sufficient water at the lowest stage to provide for all the requirements of the mill. Most of the large mining camps

of the United States are today provided with cheap hydroelectric power and the only prime mover problem for the designer is the number, size and disposition of motors for driving the mill machinery.

The tendency in late years to equip manufacturing establishments with electric power has been toward individual or group motor driving, but in ore mills the elimination of shafting and belting has not proceeded to such extremes; indeed the only similarity to this practice is the use of a few motors driving complete sections of the mills. The argument against individual driving in the mills is, first, that many ore mill machines are unbalanced masses; such for example are the crushers, shaking screens, tables, vanners, etc., and since the reduction in speed of the motors must be made by gearing the vibration set up by lack of balance acts destructively on the gearing. Again, the power consumption of the machinery is usually so variable that excessive heating of the motors would result unless made unduly over capacity. Again, many machines particularly the crushers, elevators, etc., are subject to sudden stoppages, the result of which would be to strip the teeth of the reduction gearing. In wet concentrating mills unexpected leakages of water may cause a burning out of the insulation of the motor and in dry mills or in the crushing plant, the dust would be highly destructive to the bearings of the motors. For ordinary jig mills, three motors will usually be selected, one for the crushing machinery, one for the jigs and other machinery in that portion of the mill, and a third for the sand and slime machinery. It is of some advantage to have the sands and slime department on a separate motor, for if it is necessary to shut down the body of the mill suddenly, the tables and vanners can be allowed to run until the classifiers, dewatering and thickening devices are closed, thus avoiding quite serious losses which are bound to occur in mills having but one prime mover.

The motor should always be located in a dry place of even temperature and as free from dust as possible. The usual practice is to build a room around it to protect it from dust and this room should when practicable be located in a cool corner of the mill and be of as ample space as conditions permit. The motor rooms should be kept scrupulously clean and the electric apparatus wiped from time to time. Ring bearings on motors need constant watching to see that the rings or chains are rotating with the shaft and the oil in the reservoir sufficiently free from contamination to lubricate properly. It has been my experience that many of the so-called dynamo oils on the market are far too heavy to perform their function properly, the result being that bearings constantly run dangerously hot. If the rings used in ring oilers stop from any cause, a flat spot will be worn on the inner side and non-rotation from this cause will increase. Direct-current machines used for lighting and exciting must have their commutators turned in a lathe from time to time, smoothing them down with sand paper being merely a temporary expedient. Constant speed induction motors are the favorite for mining work. Motors from 25 to 50 per cent. greater

capacity than the duty expected of them should be chosen for both crushing and separating plants.

Shafting.—The rules for laying out shafting are few in number and dependent largely on common sense. Carry the countershaft-driven pulleys and the driving pulleys as close to the walls as possible. Set the shafting across the bridge trees as near the posts as is practicable for clearing pulleys and convenience in throwing on belts.

If all the machines to be driven from a countershaft are on one side of one of the mill caps, then the shafting should be set upon that side also. If the machines are on both sides of a mill cap near which it is proposed to locate a countershaft, then the shaft should be set on the side containing the greater number of machines unless there are extra heavy belts to be thrown on the pulley in starting machinery on the other side. In this case the reverse side will have the preference in location. The parallel arrangement of machinery and its location on floors ahead or behind one another as demanded by good modern design render it difficult or impossible to so drive from countershafts that the deflections due to the pull of the belts are balanced, that is, the angles of departure of the belts from the shafts cannot be arranged around the circumference of a circle or part of a circle in a way that the pulls of the belt oppose or partly balance one another.

The formula for spacing of bridge trees or supports for shafting given by Kent from the data compiled by the Pencoyd Iron Works for a deflection

WEIGHT SHAFTING

Diameter	Weight per ft.	Price per lb.	Price per ft.	Diameter	Weight per ft.	Price per lb.	Price per ft.
1–3/16 in.	3.77 lb.	$0.05–1/2	$0.21	2–7/8 in.	22.09 lb.	$0.05	$1.11
1–1/4	4.17	0.05–1/2	0.23	2–15/16	23.06	0.05	1.16
1–3/8	5.05	0.05–1/2	0.28	3	24.05	0.05	1.21
1–7/16	5.52	0.05–1/2	0.31	3–1/8	26.09	0.05–1/4	1.37
1–1/2	6.01	0.05	0.31	3–3/16	27.16	0.05–1/4	1.43
1–5/8	7.06	0.05	0.36	3–1/4	28.22	0.05–1/4	1.49
1–11/16	7.61	0.05	0.39	3–3/8	30.43	0.05–1/4	1.60
1–3/4	8.18	0.05	0.41	3–7/16	31.58	0.05–1/4	1.66
1–7/8	9.39	0.05	0.47	3–1/2	32.73	0.05–1/2	1.81
1–15/16	10.03	0.05	0.51	3–15/16	41.40	0.05–1/2	2.28
2	10.69	0.05	0.54	4	42.75	0.06	2.57
2–1/8	12.07	0.05	0.61	4–7/16	52.62	0.06	3.16
2–3/16	12.80	0.05	0.65	4–1/2	54.11	0.06–1/2	3.52
2–1/4	13.52	0.05	0.68	4–15/16	65.50	0.06–1/2	4.26
2–3/8	15.07	0.05	0.76	5	67.45	0.07	4.73
2–7/16	15.89	0.05	0.80	5–7/16	78.95	0.07	5.53
2–1/2	16.70	0.05	0.84	5–1/2	80.77	0.07–1/2	6.06
2–5/8	18.41	0.05	0.93	5–15/16	94.14	0.07–1/2	7.07
2–11/16	19.31	0.05	0.97	6	96.14	0.08	7.70
2–3/4	20.21	0.05	1.02				

not to exceed 1/100 in. per ft. of length is: $L = \sqrt[3]{720d^2}$ where L is the greatest permissible length of span in feet, and d the diameter of the shaft in inches. This formula provides merely for the deflection of the shaft under its own weight. For shafts carrying pulley, the same authority gives: $L = \sqrt[3]{140d^2}$. The proper size of shafting to transmit any horse power at a given number of revolutions per minute is given in Fig. 57. The horse power which any shaft will transmit is given in any of the standard text books on Applied Mechanics. The formula on which the chart is founded is given at the top of the chart and it will be noted that the denominator of the right hand expression is 100. According to Thurston this denominator should be 75 for head shafts well supported against springing and with the bearings close to the pulleys; 55 for line shafting with supports 8 ft. apart; and 35 for transmission simply, there being no pulleys. For cold rolled iron the formula is consequently amply safe for all transmission problems except very extraordinary ones, where owing to the use of many extra large pulleys the torsion and deflection would be great. An accompanying table shows the weight of cold rolled steel shafting. The standard length of shafting is

STANDARD SIZES OF KEY SEATS FOR PULLEYS, GEARS, SHEAVES, SPROCKETS, CLUTCHES, ETC. STANDARD TAPER OF KEYS 1/8 INCH PER FOOT

Diameter of shaft	Size of key, in.	Key seat in hub		Key seat in shaft	
		Width, in.	Depth, in.	Width, in.	Depth, in.
3/4 to 1-1/4 in.....	1/4× 3/16	1/4	1/8	1/4	1/16
1-5/16 to 1-3/4 in.....	3/8× 9/32	3/8	3/16	3/8	3/32
1-13/16 to 2-1/4 in.....	1/2× 3/8	1/2	1/4	1/2	1/8
2-5/16 to 2-3/4 in.....	5/8× 15/32	5/8	5/16	5/8	5/32
2-13/16 to 3-1/4 in.....	3/4× 9/16	3/4	3/8	3/4	3/16
3-5/16 to 3-3/4 in.....	7/8× 21/32	7/8	7/16	7/8	7/32
3-13/16 to 4-1/4 in.....	1 × 3/4	1	1/2	1	1/4
4-5/16 to 4-3/4 in.....	1-1/8× 27/32	1-1/8	9/16	1-1/8	9/32
4-13/16 to 5-1/4 in.....	1-1/4× 15/16	1-1/4	5/8	1-1/4	5/16
5-5/16 to 5-3/4 in.....	1-3/8× 1-1/32	1-3/8	11/16	1-3/8	11/32
5-13/16 to 6-1/4 in.....	1-1/2× 1-1/8	1-1/2	3/4	1-1/2	3/8
6-5/16 to 6-13/16 in.....	1-5/8× 1-7/32	1-5/8	13/16	1-5/8	13/32
6-7/8 to 7-1/4 in.....	1-3/4× 1-5/16	1-3/4	7/8	1-3/4	7/16
7-5/16 to 8-1/4 in.....	2 × 1-1/2	2	1	2	1/2
8-5/16 to 9-1/4 in.....	2-1/4× 1-1/2	2-1/4	1	2-1/4	1/2
9-5/16 to 10-1/4 in.....	2-1/2× 1-1/2	2-1/2	1	2-1/2	1/2
10-5/16 to 11-1/4 in.....	2-3/4× 1-1/2	2-3/4	1	2-3/4	1/2

20 ft. The only sensible mode of connecting two pieces of shafting is by means of a standard coupling, dimensions and weights of which fixture are shown in Fig. 57a and the accompanying table. For securing the shafts from endwise movements, only safety collars should be used, Fig. 58. Indeed the old-fashioned collar with its dangerous projecting screw is no longer listed

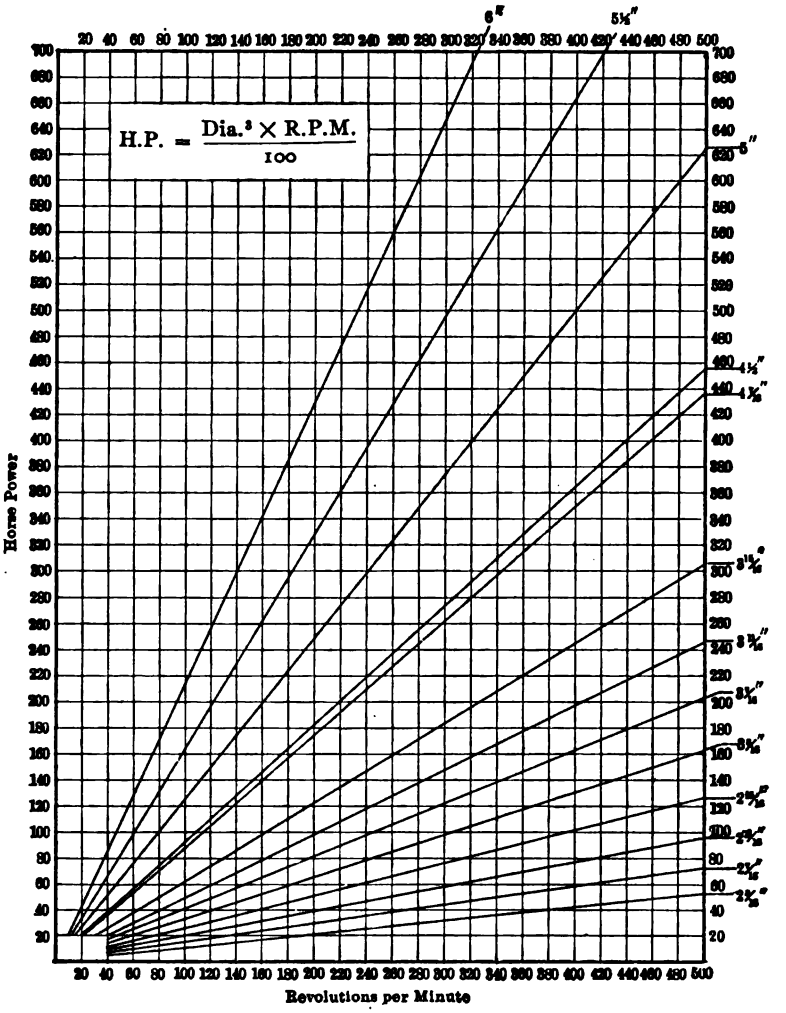
H.P. = Dia.³ × R.P.M. / 100
6"
5½"
5"
4½"
4 15/16"
3 15/16"
3 7/16"
3"
2 15/16"
2 7/16"
2"
2 1/16"
Horse Power
Revolutions per Minute

FIG. 57.

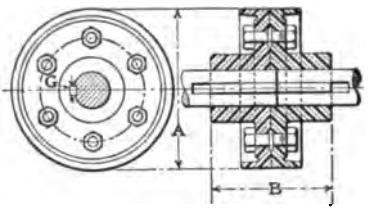

Diam. shaft, in.	A, in.	B, in.	G, in.	Weight, lb.
1–7/16	6–1/2	5	.....	20
1–11/16	7	5–1/2	.....	27
1–15/16	8	6–3/4	7/16	35
2–3/16	9	7–1/2	7/16	44
2–7/16	10	8–1/4	7/16	60
2–11/16	10–3/4	8–3/4	7/16	70
2–15/16	11–1/4	9–1/4	9/16	103
3–3/16	11–5/8	10	9/16	119
3–7/16	12–3/4	10–1/2	9/16	140
3–11/16	13–3/4	11–1/4	9/16	157
3–15/16	13–3/4	12	11/16	170
4–3/16	15	13–1/2	11/16	220
4–7/16	15	13–1/2	11/16	272
4–11/16	16–1/4	14–3/4	11/16	303
4–15/16	16–1/4	14–34/	11/16	334
5–7/16	18–1/2	16	11/16	385
5–15/16	20	17	15/16	475
6–1/2	21–1/2	18–1/2	15/16	570
7	23–1/2	20	15/16	670
7–1/2	23–1/2	21–1/2	15/16	890
8	26	23	15/16	1,016

FIG. 57a.

in the catalogues of first-class manufacturers of transmission machinery. For setting and leveling shafting nothing is so satisfactory as an engineer's level. The bridge trees having been recessed and brought to approximately the same level by a level and long straight edge of sufficient length to reach from one bridge tree to another, the bearings are put in place and half round wooden blocks of radius equal to the shafting are placed in them. The foot of the level target rests on these blocks. To lower a bearing the wood must be cut away and to raise it the proper amount of shims must be placed under it. If bracket or hanger bearings are used, the target must be held on the same point on all the bearings after they are placed approximately in line. Bracket bearing supports should as far as possible be avoided except for the very lightest shafting. For bridge trees wood is the best substance even when the structural members are of steel.

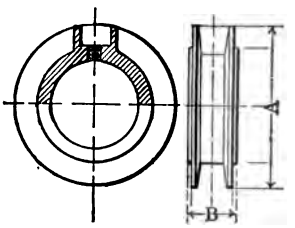

Diameter of bore, in.	A, in.	B, in.	Diameter of bore, in.	A, in.	B, in.	Diameter of bore, in.	A, in.	B, in.
1-3/16	3	1-58/	3-7/16	6	2-1/2	7	12-1/4	3-3/4
1-7/16	3-1/4	1-5/8	3-15/16	6-1/2	2-3/4	7-1/2	14	3-7/8
1-11/16	3-1/2	1-3/4	4-7/16	7	3	8	14	3-7/8
1-15/16	4	1-7/8	4-15/16	8	3	8-1/2	15-1/2	4-1/2
2-3/16	4-1/4	1-7/8	5-7/16	10	3-1/2	9	15-1/2	4-1/2
2-7/16	4-1/2	2	5-15/16	10-1/2	3-3/4	9-1/2	17	2-3/4
2-11/16	5	2-1/8	6-1/2	11	4	10	17-1/2	4-1/4
2-15/16	5-1/2	2-1/2						

FIG. 58.

The simplest bearing is the best for mill work and grease the best lubricant, and this is best applied by an ordinary cast-iron or steel screw cup. The threads on brass cups are easily stripped even when care is taken in handling them. With grease cups all bearings must be regularly visited twice a shift by the oiler to see that there is sufficient lubricant in the cup, the bearings not overheating, and to give the cup a quarter or half turn to force out grease which has been foul. Oil ring or chain bearings quickly become fouled in concentrating mills and if kept in proper condition they consume too much of the oiler's time. The ordinary oil bearing is wasteful of lubricant which not only escapes from the journal too quickly, but much oil is spilled by the

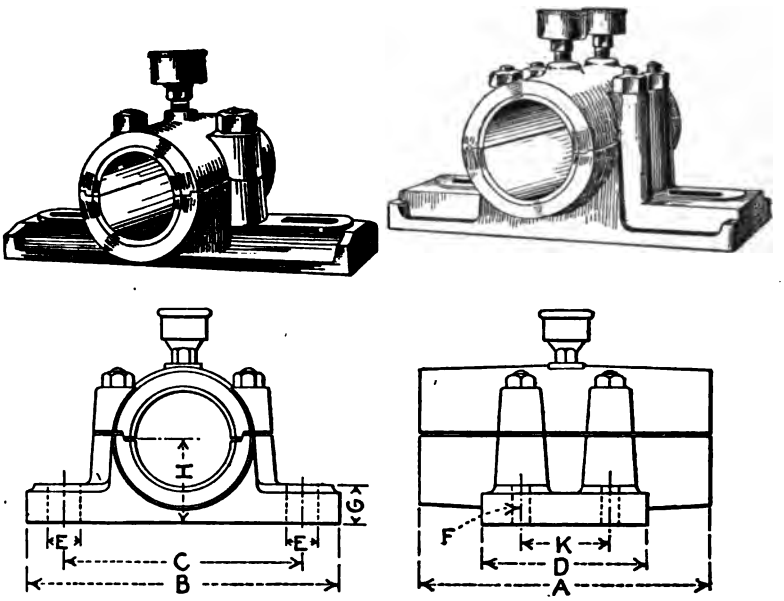

DIMENSIONS

Diameter shaft, in.	A, in.	B, in.	C, in.	D, in.	E, in.	F, bolt	G, in.	H, in.	K, in.	Weight, lb.
1-7/16	4-1/2	8	5-3/4	2-3/8	1	2- 1/2	7/8	1-1/2	.....	8
1-11/16	5-1/4	8-1/4	6	2-3/4	1-1/8	2- 1/2	15/16	1-3/4	.....	12
1-15/16	6	9-1/2	7	3-1/4	1-3/16	2- 5/8	1-1/16	2	.....	14
2-3/16	6-3/4	10	7-1/4	3-1/2	1-1/4	2- 5/8	1-1/8	2-1/4	.....	17
2-7/16	7-1/2	11-1/4	8	3-3/4	1-1/2	2- 3/4	1-5/16	2-3/8	.....	24
2-11/16	8-1/4	12-1/2	8-3/4	4	1-1/2	2- 3/4	1-3/8	2-5/8	.....	32
2-15/16	9	13-3/4	9-3/4	4-1/4	1-3/4	2- 7/8	1-7/16	2-7/8	.....	39
3-3/16	9-3/4	13-1/2	9	5-1/2	1-3/4	2- 7/8	1-7/16	3-1/8	.....	47
3-7/16	10-1/2	13-3/4	9-1/4	6-1/2	1-3/4	2- 7/8	1-1/2	3-3/8	.....	58
3-11/16	12	15-1/2	10-1/2	7-1/2	2	2-1	1-11/16	3-7/8	.....	90
3-15/16	12	15-1/2	10-1/2	7-1/2	2	2-1	1-11/16	3-7/8	.....	90
4-7/16	13-1/2	17-1/4	11-1/2	8-1/2	2-1/4	2-1-1/8	1-13/16	4-3/8	.....	124
4-15/16	15	19	12-1/4	9-1/2	2-3/8	2-1-1/4	2	4-7/8	.....	170
5-7/16	16-1/2	19	14	9-3/4	2-1/8	4-1	2-1/8	5-1/8	5	190
5-15/16	18	20-1/4	15-1/4	10-1/4	2-1/8	4-1	2-3/8	5-1/2	5-1/2	280
6-1/2	19-1/2	21	16	11	2-1/8	4-1	2-1/2	5-3/4	6	340
7	21	22-1/4	17	11-1/2	2-1/4	4-1-1/8	2-5/8	6	6-1/2	468
7-1/2	24	24-1/2	19	12-1/2	2-1/2	4-1-1/4	2-7/8	6-3/4	7-1/2	570
8	24	24-1/2	19	12-1/2	2-1/2	4-1-1/4	2-7/8	6-3/4	7-1/2	570
8-1/2	27	27	21	13-1/2	2-3/4	4-1-3/8	3-1/8	7-1/4	8-1/4	700
9	27	27	21	13-1/2	2-3/4	4-1-3/8	3-1/8	7-1/4	8-1/4	700

FIG. 59.

oiler in filling cups or saturating the waste wells. Oil-soaked bridge trees are very dangerous in case of fire. The spread of the flames which was very rapid in two cases which have come under my observation could only be attributed to the saturation of the mill timber with lubricating oil. Fig. 59 and the table gives weights and dimensions for plain bearings.

In laying out shafting it will be found that only jigs require an overhead drive, though it is often convenient to drive many of the other machines from above. As far as possible the aim should be to have the belt rise to the shafts and not drop to it. Drives from above confuse the head space and are a greater source of danger to the operations than when they rise from below. Overhead drives render changes in spouting difficult. Spouting must always be carried over the machines they feed. In driving from below, resort must be had to jack post or hanger stands or the bearings must rest on bridge trees framed into the posts. Special bearings of those kinds will be found listed in all the catalogues of manufacturers of transmission machinery. The shafting should, of course, be set so that the belt will "lay to" the driven pulley and up to an angle of 45 deg. will give increasing areas of contact on the driven pulley for angles above this the belt does not enwrap the pulley so completely and at angles below 45 deg. the gain in "lay to" is offset by the belt falling away from the pulley on the loose side.

Cast-iron pulleys should be used for all permanent work. For driving jigs, tables, vanners, etc., or any machine where improved work may result from a change in speed, split pulleys should be selected. Pulleys are made in three weights, light, medium and heavy, and the weights in the accompanying table are average but sufficiently close for estimates.

APPROXIMATE WEIGHTS OF CAST-IRON PULLEYS—SINGLE BELT

Diameter, in.	Face in inches							
	3	4	5	6	7	8	9	10
6.....	10	15	18	21	25	27	30	40
8.....	14	16	20	23	27	30	32	45
10.....	16	20	23	28	30	31	40	50
12.....	20	22	24	28	33	42	49	56
14.....	22	28	32	36	40	45	50	60
16.....	27	30	40	55	58	60	63	66
18.....	30	35	42	50	54	62	80	95
20.....	40	52	58	63	70	75	80	102
22.....	45	58	63	70	75	80	93	106
24.....	50	60	65	70	75	85	95	110
26.....	55	62	83	100	115	125	130	135
28.....	62	65	90	105	120	130	140	145
30.....	66	75	88	110	120	125	145	165
32.....	71	80	95	130	148	165	190	220
34.....	75	90	110	135	150	170	195	230
36.....	77	100	125	140	169	180	198	240

DOUBLE BELT

Diameter, in.	Face in inches											
	8	10	12	14	16	18	20	22	24	26	28	30
18...	93	102	115	135	145	160	195	225	245	.....	.....	.....
20...	104	119	130	160	190	200	225	250	.....	.....	.....	.....
22...	118	145	165	185	218	238	265	280	.....	.....	.....	.....
24...	134	170	185	200	225	245	290	325	360	390	430	500
26...	145	180	195	245	275	300	350	375	435	485	520	575
28...	165	200	211	271	310	345	390	440	510	565	610	675
30...	190	215	240	300	320	360	430	470	600	650	700	750
32...	198	225	270	326	374	423	471	500	560	665	767	824
34...	217	250	280	350	407	450	531	590	660	700	800	875
36...	230	280	305	385	440	495	600	620	670	725	825	900
38...	259	308	355	416	470	500	610	660	710	760	875	940
40...	275	320	375	440	490	550	625	700	760	810	900	980
42...	290	340	400	450	540	600	675	743	820	890	950	1,000
44...	325	360	425	490	560	650	720	795	864	992	1,100	1,200
46...	340	380	440	530	582	700	774	840	940	1,050	1,170	1,275
48...	350	400	450	550	600	750	850	950	1,050	1,150	1,250	1,350
50...	376	440	531	612	710	800	847	980	1,061	1,170	1,300	1,425
52...	400	480	560	664	740	838	925	1,012	1,121	1,194	1,378	1,500
54...	425	536	610	700	750	900	950	1,050	1,150	1,250	1,400	1,600
56...	490	540	640	720	831	925	1,002	1,121	1,231	1,330	1,600	1,700
58...	515	600	652	741	875	981	1,071	1,190	1,292	1,400	1,690	1,800
60...	550	645	720	750	890	1,000	1,100	1,250	1,350	1,462	1,800	1,900
62...	570	663	760	860	970	1,092	1,202	1,301	1,432	1,550	1,850	2,000
64...	600	700	780	915	1,027	1,200	1,262	1,375	1,500	1,625	1,900	2,100
66...	621	735	842	900	1,069	1,211	1,321	1,450	1,576	1,703	1,950	2,200
68...	662	765	910	1,002	1,121	1,250	1,400	1,500	1,651	1,780	2,000	2,300
70...	690	785	950	1,050	1,179	1,300	1,450	1,600	1,729	1,861	2,100	2,350
72...	721	840	1,000	1,095	1,230	1,350	1,500	1,650	1,799	1,950	2,200	2,400
74...	760	900	1,021	1,150	1,350	1,420	1,600	1,725	1,900	2,050	2,300	2,600
76...	802	935	1,056	1,200	1,375	1,500	1,750	1,900	2,200	2,250	2,500	2,800
78...	825	960	1,100	1,250	1,400	1,600	1,792	1,924	2,250	2,300	2,600	3,100
80...	870	1,000	1,150	1,300	1,460	1,800	1,900	1,981	2,340	2,600	2,800	3,300
82...	900	1,050	1,200	1,350	1,520	1,842	19,21	2,100	2,382	2,741	3,000	3,400
84...	940	1,080	1,232	1,400	1,600	1,850	1,950	2,250	2,400	2,750	3,200	3,500

Split Pulleys weigh about 10 per cent. more than the above.

Approximate differences in prices between cast-iron, split and solid hub single pulleys.

Width face, in.	Diameter, in.	% less cost	Width face, in.	Diameter, in.	% less cost
3	6	40	3	30	32
3	10	34	4	40	32
3	16	30	5	50	25
3	24	40	6	60	16

Wooden pulleys should only be used for experimental work or work of a temporary character.

Belting.—Rubber belts are used almost exclusively in concentrating mills and have the advantages that they will work without any detriment in damp places, cling well to the surface of pulleys, and have great strength. Rubber belting is rapidly destroyed by the application of dopes to make it adhere more firmly to the pulleys. If a belt is slipping it is probably due to its being dry and dusty. Remove the dust with a slightly dampened piece of waste and apply a small amount of linseed oil. If this does not stop the slipping, the belt should be tightened slightly. For calculating the width of rubber belt required to transmit any horse power, and consequently the width of pulley which need be but an inch greater width than the belt for single pulleys and but an inch greater than twice the width for a double or driving pulley, the following rules may be used.

Width[1] $= \frac{\text{h.p. } 650 \times N}{4v}$, where v is the velocity in feet per minute and N the number of plies in the belt. It is assumed in this rule that the arc of contact on the driven pulley is 180 deg. A three- or four-ply rubber belt is equal in strength to a single leather belt and a five- or six-ply to a double leather belt. The diameter of pulleys is fixed by the desired relation in speed between the driving and driven pulley, the speed regulation being inversely as the diameters but the width of face and diameter of pulley has no bearing on the power which can be transmitted; that is, every pulley on a shaft will transmit an equal amount of power regardless of the diameter provided all the belt tensions are equal and the arc of contact is the same. In order to increase the power a belt will transmit the arc of contact on the driving pulley must be increased, or the tension increased.

Friction Clutches.—In order to reduce the starting load of mill shafting and machinery, it is common practice to insert at convenient points friction clutches or shifting belts. Clutches are of the following types: single cone, multiple cone or tooth contacts, single disc, multiple disc, single and double pressure ring. The first two types are uncommon in transmission machinery, the disc types are frequently used, and also the ring types. I have a preference for the double-pressure ring type. Pressure in all the types is brought about by toggle arrangements. On the left of Fig. 60 of a four-armed clutch with double jaws is a yoke with studs. A lever, not shown, is pinned at a point above the clutch yoke and secured to the yoke by the studs *c*. To engage the clutch the yoke is forced by the lever toward the friction pulley; the manner in which the clutch engages and releases will be plain from the sections, Fig. 61. The yoke is on the E portion of the shaft. Friction clutches of this kind are made in two patterns, in one a loose pulley is mounted on an unbroken shaft and when the clutch is disengaged the pulley continues to revolve on the shaft, being belt driven, and the clutch and shaft cease rotating. In the other, called a cut-off coup-

[1] Formula, Boston Belting Co.

ling, the friction pulley and jaws are mounted on separate portions of the shaft and the part holding the jaws is set in motion on engaging the clutch. For very heavy driven pulleys the latter pattern is to be preferred, although it has the disadvantage that if there is any eccentric thrust on the portion of the shaft holding the clutch, due to lack of alignment of the two portions of the shafting, or of the fittings of the clutch, the clutch shaft which cannot have an outboard bearing is apt to become sprung. The disadvantage of the arrangement where the pulley rotates on an unbroken shafting is due to

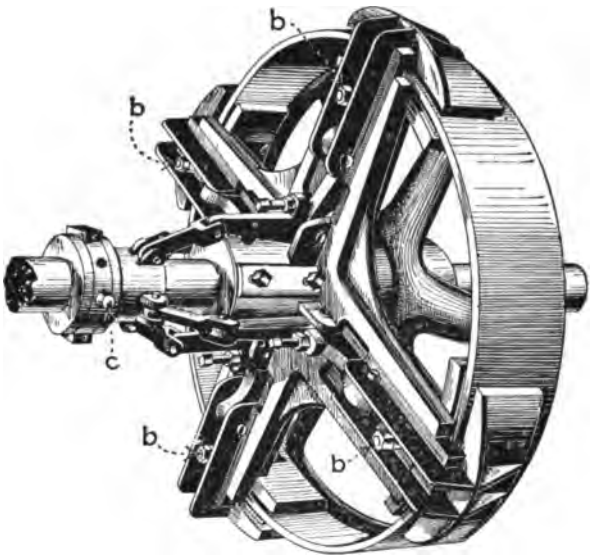

FIG. 60.

allowing the pulley to run when the clutch is out, which in time, will cause the hub to become badly worn. Adjustment of the jaws is made by the set screws and lock nuts *a*, shown in the sections, and great caution must be exercised in making adjustments of the jaws. In making adjustments the operator must see that each pair of jaws is at an equal distance from the friction pulley, a condition which can be obtained after loosening the bolts *b*. The clutch can then be thrown in cautiously and if it seizes too quickly the set screws *a* can be screwed back slightly less than a quarter turn and tried again. After a number of trials a position will be reached when the clutch can be thrown in without burning the jaw blocks and yet will transmit the load without slipping. A large clutch of the type described is a very dangerous device in the hands of a tyro, and its care should be intrusted to someone experienced in the adjustments. The danger of not having all the arms seize the pulley with the same pressure must be apparent since if one arm bears with greater pressure a sudden slippage will

throw all the load on one arm which may give way. After the blocks are adjusted at their proper distance from the friction pulley, no change in adjustment need generally be made other than through the set screws *a*, as

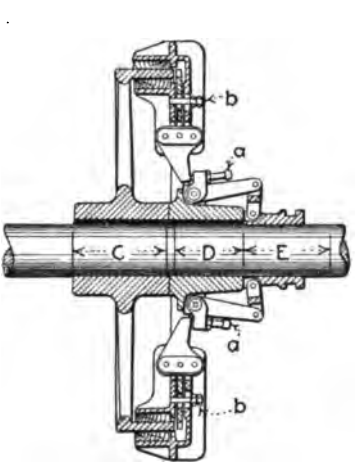

Cut-off Coupling.

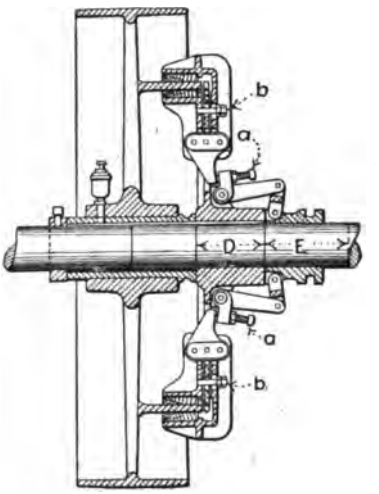

Pulley Clutch.

FRICTION CLUTCH CUT-OFF COUPLINGS WITH FOUR AND SIX ARM CLUTCHES

Diam. coupling	H.p. 100 rev.	Largest bore	Equal to shaft	Space required			Shipping weight
				C	D	E	
18	8	4	1-11/16	5	4	7-1/2	196
20	11	4-1/2	1-15/16	6-3/8	5	7-1/2	251
22	15	5	2-3/16	6-3/4	5-1/2	7-1/2	314
24	18	5-1/2	2-7/16	7	6	9	409
28	29	6	2-11/16	7-7/8	7	9	554
32	43	7	3-3/16	8-7/8	7-1/2	9	684
36	57	8	3-11/16	9-5/8	7-1/2	10	890
36	75	8	4-3/16	9-5/8	7-1/2	10	1,057
40	90	8-1/2	4-7/16	10-3/8	8	10-1/2	1,180
40	107	8-1/2	4-3/4	10-3/8	8	10-1/2	1,428
48	150	9	5	11-1/2	9	11	1,701
48	224	9	5-1/4	11-1/2	9	11	2,050
54	275	10	5-1/2	12-3/4	10-1/2	13	2,321
54	320	10	6	12-3/4	10-1/2	13	2,857
60	403	12	7	12-3/4	17-1/4	15	5,018
72	756	12	8	14-1/4	29	.....	9,300
84	1200	12	10	16	31	.....	14,800

FIG. 61.

the jaw blocks wear down evenly by charring or abrasion. Bass wood furnishes the most suitable material for jaw blocks. The illustrations of clutches are of devices made by the Hill Clutch Company, but many manu-

facturers of transmission machinery make clutches of similar pattern. The table shows weights and important dimensions of Hill clutches and the horse power they will transmit. For the loose pulley type of coupling, and with friction pulleys cast to the rims, any size of driven pulley desired can be

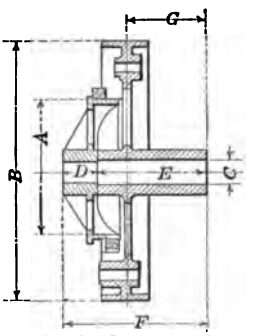

B is Smallest Diameter Pulley in which Clutch can be Built.
C is Largest Size Shaft for Standard Clutch.

A	B	C	D	E	F	G	Number and size of bands	H.p. per 100 rev.
8	15	3-3/16	3-1/2	7-1/8	17-1/4	9-3/4	1-3×1/8	7
10	17	2-7/16	3	9	12	6-9/16	1-2-1/2 × 1/8	11
16	30	3-7/16	5	13	18	9-1/8	2-1-3/4 × 1/4	26
20	36	6	6	14	21	.....	2-1-3/4 × 1/4	32
24	42	3-7/16	6	18	24	13-3/8	2-2 × 1/4	45
30	52	5	7	21	28	15	2-2-1/2 × 1/4	78
36	56	7-1/2	8	21	29	14-1/2	2-2-1/2 × 1/4	92
48	72	7-1/2	9	23-7/8	32-7/8	17-3/8	2-3 × 3/16 in.	120
12	20	3-15/16	3-1/2	12-3/4	16-1/4	8-3/8	1-3 × 1/8	12
20	36	7-3/16	6 in.	14	21-3/4	10-3/16	2-3 in. × 3/16	.....
24	48	3-15/16	6	17-3/4	23-3/4	13-3/8	2-2 × 1/4	.....
20	48	7-3/16 in.	6	14	21-3/4	10-3/16	2-2 × 3/16	.....
36	58-3/4	5-1/4 in.	.....	.....	.....	14-1/2 in.	2-4 in. × 3/16 in.	130

FIG. 62.

furnished. The table is consequently applicable to either type of clutch. With the cut-off couplings there must of course be an extra or driven pulley. In general it may be stated that where a friction coupling can be placed at the end of a shaft the cut-off type had best be employed, and where the clutch

must be placed in the central portions of the shafting, the type with loose pulley is preferable. The writer prefers this type of friction clutch for the reason that with either type transverse thrust tending to spring the shaft or friction pulley are resisted uniformly in all directions. The grip of the jaws is more positive than in other types of friction clutch and the adjust-

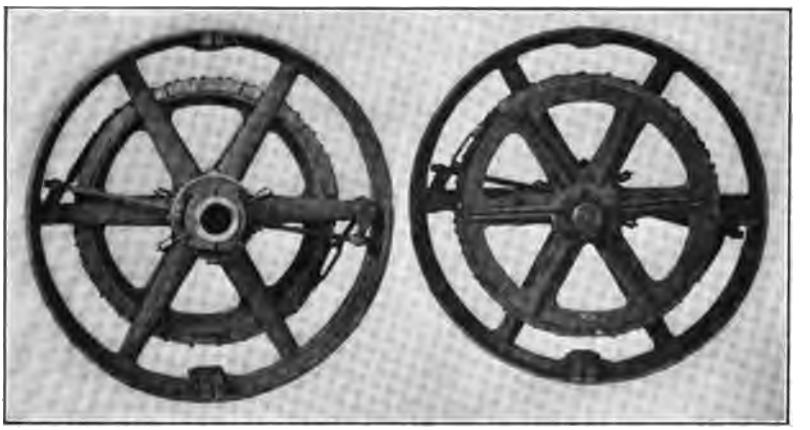

FIG. 63.

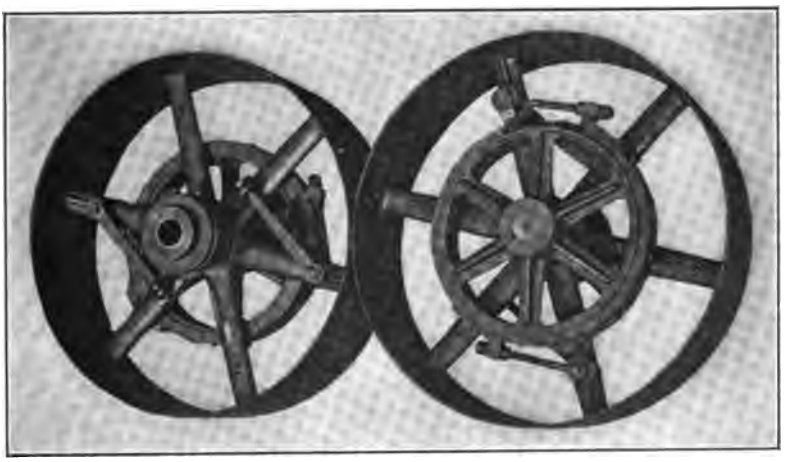

FIG. 64.

ments more readily reached. The Wellman-Seaver-Morgan clutches shown in Figs. 63 and 64 and with dimensions, etc., given in the table, would seem better in this respect than the Hill patterns, but I have had no personal experience with them. This type is largely and successfully used on mine hoists.

Friction of Water in Pipes

Loss of Head in Feet Due to Friction, Per 100 Ft. of Smooth, Straight Cast-iron Pipe

Gal. per min.	1/2-in. pipe		3/4-in. pipe		1-in. pipe		1-1/4-in. pipe		1-1/2-in. pipe		2-in. pipe		2-1/2-in. pipe		3-in. pipe		4-in. pipe	
	Vel.	Fric.	Vel.	Fric.	Vel.	Fric.	Vel.	Fric.	Vel.	Fric.	Vel.	Fric.	Vel.	Fric.	Vel.	Fric.	Vel.	Fric.
1	1.05	1.50	.....	.....	.....	.....	.....	.....	.....	.....	.....	.....	.....	.....	.....	.....	.....	.....
2	2.10	5.30	1.20	1.40	.....	.....	.....	.....	.....	.....	.....	.....	.....	.....	.....	.....	.....	.....
3	3.16	11.30	1.80	2.90	1.12	0.90	.....	.....	.....	.....	.....	.....	.....	.....	.....	.....	.....	.....
4	4.21	19.20	2.41	5.00	1.49	1.52	0.86	0.40	0.63	0.187	.....	.....	.....	.....	.....	.....	.....	.....
5	5.26	29.00	3.01	7.50	1.86	2.32	1.07	0.60	0.79	0.283	0.51	0.09	0.33	0.05	.....	.....	.....	.....
10	10.52	105.00	6.02	27.10	3.72	8.40	2.14	2.18	1.57	1.02	1.02	0.36	0.65	0.12	0.45	0.05	.....	.....
15	.....	.....	9.02	57.00	6.13	18.90	3.92	4.65	2.72	2.25	1.53	0.81	0.98	0.25	0.68	0.11	.....	.....
20	.....	.....	12.03	97.00	7.44	30.10	4.29	7.90	3.15	3.70	2.04	1.29	1.31	0.43	0.91	0.18	.....	.....
25	.....	.....	.....	.....	9.30	45.50	5.36	11.90	4.56	5.60	2.55	1.96	1.63	0.66	1.13	0.27	.....	.....
30	.....	.....	.....	.....	11.15	64.00	6.43	16.90	4.72	7.80	3.06	2.73	1.96	0.92	1.36	0.38	.....	.....
35	.....	.....	.....	.....	13.02	85.00	7.51	22.30	5.51	10.30	3.57	3.66	2.29	1.23	1.59	0.51	.....	.....
40	.....	.....	.....	.....	14.88	109.00	8.58	28.50	6.30	13.30	4.08	4.68	2.62	1.57	1.82	0.65	1.02	0.16
45	.....	.....	.....	.....	.....	.....	9.68	35.20	7.08	16.60	4.60	5.80	2.95	1.97	2.02	0.80	1.17	0.20
50	.....	.....	.....	.....	.....	.....	10.72	43.20	7.87	20.20	5.11	7.10	3.30	2.38	2.27	0.98	1.28	0.24
70	.....	.....	.....	.....	.....	.....	15.01	81.00	11.02	37.60	7.15	13.20	4.60	4.42	3.18	1.83	1.79	0.45
75	.....	.....	.....	.....	.....	.....	.....	.....	11.80	42.70	7.66	14.90	4.93	5.07	3.41	2.11	1.92	0.52
100	.....	.....	.....	.....	.....	.....	.....	.....	15.74	73.00	10.21	25.60	6.54	8.60	4.54	3.52	2.55	0.88
120	.....	.....	.....	.....	.....	.....	.....	.....	.....	.....	12.25	36.00	7.84	12.00	5.45	4.97	3.06	1.22
125	.....	.....	.....	.....	.....	.....	.....	.....	.....	.....	12.75	38.90	8.16	13.01	5.68	5.40	3.19	1.33
150	.....	.....	.....	.....	.....	.....	.....	.....	.....	.....	15.30	54.00	9.80	18.72	6.80	7.72	3.84	1.82
175	.....	.....	.....	.....	.....	.....	.....	.....	.....	.....	.....	.....	11.43	23.70	7.92	9.75	4.45	2.40
200	.....	.....	.....	.....	.....	.....	.....	.....	.....	.....	.....	.....	13.07	30.90	9.08	12.80	5.11	3.12
225	.....	.....	.....	.....	.....	.....	.....	.....	.....	.....	.....	.....	.....	.....	10.42	16.00	6.32	4.72
250	.....	.....	.....	.....	.....	.....	.....	.....	.....	.....	.....	.....	.....	.....	11.28	19.70	6.40	4.80
270	.....	.....	.....	.....	.....	.....	.....	.....	.....	.....	.....	.....	.....	.....	12.45	22.70	6.90	5.50
275	.....	.....	.....	.....	.....	.....	.....	.....	.....	.....	.....	.....	.....	.....	12.70	23.60	7.03	5.71
300	.....	.....	.....	.....	.....	.....	.....	.....	.....	.....	.....	.....	.....	.....	13.62	27.10	7.66	6.70
350	.....	.....	.....	.....	.....	.....	.....	.....	.....	.....	.....	.....	.....	.....	.....	.....	8.90	8.80
400	.....	.....	.....	.....	.....	.....	.....	.....	.....	.....	.....	.....	.....	.....	.....	.....	10.20	11.30
450	.....	.....	.....	.....	.....	.....	.....	.....	.....	.....	.....	.....	.....	.....	.....	.....	11.50	14.10
470	.....	.....	.....	.....	.....	.....	.....	.....	.....	.....	.....	.....	.....	.....	.....	.....	12.16	16.00
475	.....	.....	.....	.....	.....	.....	.....	.....	.....	.....	.....	.....	.....	.....	.....	.....	12.30	16.40
500	.....	.....	.....	.....	.....	.....	.....	.....	.....	.....	.....	.....	.....	.....	.....	.....	12.77	17.20

FRICTION OF WATER IN PIPES

Loss of Head in Feet Due to Friction, Per 100 Ft. of Smooth, Straight Cast-iron Pipe

Gal. per min.	5-in. pipe		6-in. pipe		8-in. pipe		10-in. pipe		12-in. pipe		16-in. pipe		20-in. pipe		24-in. pipe		30-in. pipe	
	Vel.	Fric.	Vel.	Fric.	Vel.	Fric.	Vel.	Fric.	Vel.	Fric.	Vel.	Fric.	Vel.	Fric.	Vel.	Fric.	Vel.	Fric.
70	1.14	0.15	.....	.....	.....	.....	.....	.....	.....	.....	.....	.....	.....	.....	.....	.....	.....	.....
100	1.63	0.29	1.14	0.10	.....	.....	.....	.....	.....	.....	.....	.....	.....	.....	.....	.....	.....	.....
120	1.96	0.41	1.42	0.18	.....	.....	.....	.....	.....	.....	.....	.....	.....	.....	.....	.....	.....	.....
125	2.04	0.46	1.48	0.20	.....	.....	.....	.....	.....	.....	.....	.....	.....	.....	.....	.....	.....	.....
150	2.45	0.63	1.71	0.23	.....	.....	.....	.....	.....	.....	.....	.....	.....	.....	.....	.....	.....	.....
175	2.86	0.84	2.00	0.34	.....	.....	.....	.....	.....	.....	.....	.....	.....	.....	.....	.....	.....	.....
200	3.27	1.06	2.28	0.44	.....	.....	.....	.....	.....	.....	.....	.....	.....	.....	.....	.....	.....	.....
225	3.67	1.33	2.57	0.53	.....	.....	.....	.....	.....	.....	.....	.....	.....	.....	.....	.....	.....	.....
250	4.08	1.60	2.80	0.66	1.60	0.16	.....	.....	.....	.....	.....	.....	.....	.....	.....	.....	.....	.....
270	4.42	1.86	3.03	0.81	1.70	0.18	.....	.....	.....	.....	.....	.....	.....	.....	.....	.....	.....	.....
275	4.50	1.94	3.06	0.82	1.73	0.19	.....	.....	.....	.....	.....	.....	.....	.....	.....	.....	.....	.....
300	4.90	2.25	3.40	0.92	1.90	0.26	.....	.....	.....	.....	.....	.....	.....	.....	.....	.....	.....	.....
350	5.72	2.99	3.98	1.21	2.20	0.29	.....	.....	.....	.....	.....	.....	.....	.....	.....	.....	.....	.....
400	6.54	3.81	4.54	1.58	2.60	0.40	.....	.....	.....	.....	.....	.....	.....	.....	.....	.....	.....	.....
450	7.35	4.75	5.12	1.96	2.92	0.46	1.80	0.150	.....	.....	.....	.....	.....	.....	.....	.....	.....	.....
470	7.78	5.30	5.49	2.23	3.07	0.55	1.92	0.170	.....	.....	.....	.....	.....	.....	.....	.....	.....	.....
500	8.17	5.80	5.60	2.33	3.20	0.58	2.04	0.200	1.42	0.08	.....	.....	.....	.....	.....	.....	.....	.....
550	8.99	6.90	6.16	2.81	3.52	0.70	2.25	0.236	1.57	0.098	.....	.....	.....	.....	.....	.....	.....	.....
600	9.80	8.10	6.72	3.36	3.84	0.83	2.46	0.282	1.71	0.106	.....	.....	.....	.....	.....	.....	.....	.....
650	10.62	9.40	7.28	3.93	4.16	0.96	2.66	0.327	1.85	0.134	.....	.....	.....	.....	.....	.....	.....	.....
700	11.44	10.80	7.84	4.56	4.46	1.10	2.86	0.368	2.00	0.154	.....	.....	.....	.....	.....	.....	.....	.....
750	12.26	12.30	8.50	5.00	4.80	1.24	3.06	0.422	2.13	0.170	.....	.....	.....	.....	.....	.....	.....	.....
800	.....	.....	9.08	5.64	5.12	1.41	3.28	0.476	2.27	0.196	.....	.....	.....	.....	.....	.....	.....	.....
850	.....	.....	9.58	6.25	5.48	1.63	3.48	0.534	2.41	0.22	.....	.....	.....	.....	.....	.....	.....	.....
900	.....	.....	10.30	7.22	5.75	1.76	3.68	0.592	2.56	0.24	.....	.....	.....	.....	.....	.....	.....	.....
950	.....	.....	10.72	7.65	6.06	2.05	3.88	0.653	2.70	0.25	.....	.....	.....	.....	.....	.....	.....	.....
1,000	.....	.....	11.32	8.60	6.40	2.16	4.08	0.718	2.84	0.295	.....	.....	.....	.....	.....	.....	.....	.....
1,050	.....	.....	11.90	9.50	6.70	2.29	4.29	0.782	2.98	0.34	.....	.....	.....	.....	.....	.....	.....	.....
1,100	.....	.....	12.50	10.22	7.03	2.51	4.50	0.860	3.13	0.35	.....	.....	.....	.....	.....	.....	.....	.....
1,150	.....	.....	12.95	10.96	7.35	2.74	4.71	0.957	3.27	0.38	.....	.....	.....	.....	.....	.....	.....	.....
1,200	.....	.....	13.52	11.92	7.67	3.04	4.91	1.040	3.41	0.41	.....	.....	.....	.....	.....	.....	.....	.....
1,250	.....	.....	14.10	13.00	8.00	3.18	5.11	1.080	3.55	0.44	1.99	0.109	.....	.....	.....	.....	.....	.....
1,500	.....	.....	.....	.....	9.60	4.48	6.10	1.490	4.20	0.61	2.39	0.171	.....	.....	.....	.....	.....	.....
2,000	.....	.....	.....	.....	12.70	7.65	8.10	2.500	5.60	1.02	3.19	0.280	.....	.....	.....	.....	.....	.....
2,500	.....	.....	.....	.....	.....	.....	10.10	3.810	7.00	1.56	3.99	0.397	.....	.....	.....	.....	.....	.....
3,000	.....	.....	.....	.....	.....	.....	12.10	5.300	8.40	2.42	4.79	0.568	3.08	0.191	.....	.....	.....	.....
3,500	.....	.....	.....	.....	.....	.....	14.10	7.200	9.80	2.80	5.59	0.745	3.59	0.251	.....	.....	.....	.....
4,000	.....	.....	.....	.....	.....	.....	.....	.....	11.35	3.80	6.38	0.956	4.10	0.323	.....	.....	.....	.....
4,200	.....	.....	.....	.....	.....	.....	.....	.....	11.93	4.50	6.72	1.039	4.32	0.355	.....	.....	.....	.....
4,500	.....	.....	.....	.....	.....	.....	.....	.....	12.78	4.82	7.20	1.180	4.62	0.398	.....	.....	.....	.....
5,000	.....	.....	.....	.....	.....	.....	.....	.....	14.20	5.82	7.96	1.44	5.13	0.488	3.55	0.199	2.27	0.067
5,500	.....	.....	.....	.....	.....	.....	.....	.....	.....	.....	8.78	1.705	5.64	0.584	3.90	0.247	2.5	0.081
6,000	.....	.....	.....	.....	.....	.....	.....	.....	.....	.....	9.56	2.03	6.15	0.686	4.26	0.275	2.73	0.095
6,500	.....	.....	.....	.....	.....	.....	.....	.....	.....	.....	10.36	2.45	6.66	0.719	4.61	0.312	2.95	0.112
7,000	.....	.....	.....	.....	.....	.....	.....	.....	.....	.....	11.12	2.63	7.18	0.914	4.97	0.371	3.18	0.128
7,200	.....	.....	.....	.....	.....	.....	.....	.....	.....	.....	11.50	2.83	7.38	0.964	5.11	0.392	3.27	0.135
7,500	.....	.....	.....	.....	.....	.....	.....	.....	.....	.....	11.95	3.06	7.66	1.038	5.32	0.423	3.51	0.156
8,000	.....	.....	.....	.....	.....	.....	.....	.....	.....	.....	.....	.....	8.17	1.165	5.67	0.472	3.64	0.161
8,500	.....	.....	.....	.....	.....	.....	.....	.....	.....	.....	.....	.....	8.68	1.306	6.03	0.529	3.86	0.179
9,000	.....	.....	.....	.....	.....	.....	.....	.....	.....	.....	.....	.....	9.20	1.43	6.38	0.585	4.09	0.197
9,500	.....	.....	.....	.....	.....	.....	.....	.....	.....	.....	.....	.....	9.70	1.59	6.74	0.654	4.32	0.221
10,000	.....	.....	.....	.....	.....	.....	.....	.....	.....	.....	.....	.....	10.40	1.81	7.09	0.723	4.54	0.242

FRICTION OF WATER IN ELBOWS

Loss of Head in Feet, Due to Friction in Various Sizes of Smooth 90-deg. Elbows when Discharging the Given Quantities of Water

Gals per min.	1-in.		1-1/4-in.		1-1/2-in.		2-in.		2-1/2-in.		3-in.		4-in.		5-in.		6-in.		8-in.		10-in.		12-in.	
	Vel.	Fric.	Vel.	Fric.	Vel.	Fric.	Vel.	Fric.	Vel.	Fric.	Vel.	Fric.	Vel.	Fric.	Vel.	Fric.	Vel.	Fric.	Vel.	Fric.	Vel.	Fric.	Vel.	Fric.
5	2.04	0.06	1.30	0.14	.....	.....	.....	.....	.....	.....	.....	.....	.....	.....	.....	.....	.....	.....	.....	.....	.....	.....	.....	.....
10	4.08	0.22	2.60	0.21	.....	.....	.....	.....	.....	.....	.....	.....	.....	.....	.....	.....	.....	.....	.....	.....	.....	.....	.....	.....
15	6.12	0.49	3.90	0.29	2.73	0.09	.....	.....	.....	.....	.....	.....	.....	.....	.....	.....	.....	.....	.....	.....	.....	.....	.....	.....
20	8.16	0.87	5.20	0.52	3.64	0.16	.....	.....	.....	.....	.....	.....	.....	.....	.....	.....	.....	.....	.....	.....	.....	.....	.....	.....
25	10.20	1.35	6.50	0.80	4.55	0.25	2.60	0.09	.....	.....	.....	.....	.....	.....	.....	.....	.....	.....	.....	.....	.....	.....	.....	.....
30	12.24	1.95	7.80	1.15	5.46	0.36	3.06	0.13	.....	.....	.....	.....	.....	.....	.....	.....	.....	.....	.....	.....	.....	.....	.....	.....
35	14.28	2.65	9.10	1.60	6.37	0.50	3.57	0.18	2.29	0.09	.....	.....	.....	.....	.....	.....	.....	.....	.....	.....	.....	.....	.....	.....
40	16.32	3.46	10.40	2.05	7.28	0.64	4.05	0.23	2.62	0.11	.....	.....	.....	.....	.....	.....	.....	.....	.....	.....	.....	.....	.....	.....
45	.....	.....	11.70	2.70	8.19	0.81	4.60	0.29	2.95	0.14	2.02	0.06	.....	.....	.....	.....	.....	.....	.....	.....	.....	.....	.....	.....
50	.....	.....	.....	.....	9.10	0.99	5.11	0.35	3.30	0.18	2.27	0.08	.....	.....	.....	.....	.....	.....	.....	.....	.....	.....	.....	.....
70	.....	.....	.....	.....	12.74	1.98	7.15	0.70	4.60	0.34	3.18	0.19	1.79	0.05	.....	.....	.....	.....	.....	.....	.....	.....	.....	.....
100	.....	.....	.....	.....	.....	.....	10.20	1.41	6.54	0.74	4.54	0.29	2.55	0.10	.....	.....	.....	.....	.....	.....	.....	.....	.....	.....
120	.....	.....	.....	.....	.....	.....	12.25	2.24	7.84	1.17	5.45	0.05	3.06	0.15	1.96	0.06	.....	.....	.....	.....	.....	.....	.....	.....
150	.....	.....	.....	.....	.....	.....	15.30	3.20	9.80	1.58	6.80	0.66	3.84	0.22	2.45	0.09	.....	.....	.....	.....	.....	.....	.....	.....
175	.....	.....	.....	.....	.....	.....	.....	.....	11.43	2.16	7.92	0.90	4.45	0.30	2.86	0.12	2.00	0.06	.....	.....	.....	.....	.....	.....
200	.....	.....	.....	.....	.....	.....	.....	.....	13.07	2.96	9.08	1.18	5.11	0.40	3.27	0.16	2.28	0.07	.....	.....	.....	.....	.....	.....
250	.....	.....	.....	.....	.....	.....	.....	.....	.....	.....	11.28	1.84	6.40	0.62	4.08	0.25	2.80	0.12	1.60	0.04	.....	.....	.....	.....
270	.....	.....	.....	.....	.....	.....	.....	.....	.....	.....	12.45	2.35	6.90	0.70	4.42	0.27	3.03	0.14	1.70	0.04	.....	.....	.....	.....
300	.....	.....	.....	.....	.....	.....	.....	.....	.....	.....	13.62	2.63	7.66	0.89	4.90	0.36	3.40	0.18	1.90	0.06	.....	.....	.....	.....
350	.....	.....	.....	.....	.....	.....	.....	.....	.....	.....	.....	.....	8.90	1.24	5.72	0.50	3.98	0.24	2.20	0.09	.....	.....	.....	.....
400	.....	.....	.....	.....	.....	.....	.....	.....	.....	.....	.....	.....	10.20	1.59	6.54	0.63	4.54	0.29	2.60	0.10	.....	.....	.....	.....
450	.....	.....	.....	.....	.....	.....	.....	.....	.....	.....	.....	.....	11.50	2.01	7.35	0.81	5.12	0.39	2.92	0.13	1.80	0.05	.....	.....
470	.....	.....	.....	.....	.....	.....	.....	.....	.....	.....	.....	.....	12.16	2.26	7.78	0.90	5.49	0.46	3.07	0.14	1.92	0.06	.....	.....
500	.....	.....	.....	.....	.....	.....	.....	.....	.....	.....	.....	.....	12.77	2.47	8.17	1.01	5.60	0.48	3.20	0.16	2.00	0.06	1.40	0.04
750	.....	.....	.....	.....	.....	.....	.....	.....	.....	.....	.....	.....	.....	.....	12.26	2.24	8.40	1.09	4.80	0.36	3.00	0.15	2.10	0.07
1050	.....	.....	.....	.....	.....	.....	.....	.....	.....	.....	.....	.....	.....	.....	.....	.....	12.57	2.41	7.04	0.76	4.40	0.29	3.08	0.14
1250	.....	.....	.....	.....	.....	.....	.....	.....	.....	.....	.....	.....	.....	.....	.....	..	14.10	3.02	8.00	1.00	5.00	0.40	3.50	0.20
1500	.....	.....	.....	.....	.....	.....	.....	.....	.....	.....	.....	.....	.....	.....	.....	.....	.....	.....	9.60	1.44	6.10	0.58	4.20	0.29
2000	.....	.....	.....	.....	.....	.....	.....	.....	.....	.....	.....	.....	.....	.....	.....	.....	.....	.....	12.70	2.44	8.10	1.01	5.60	0.47
2500	.....	.....	.....	.....	.....	.....	.....	.....	.....	.....	.....	.....	.....	.....	.....	.....	.....	.....	15.90	3.68	10.10	1.57	7.00	0.75
3000	.....	.....	.....	.....	.....	.....	.....	.....	.....	.....	.....	.....	.....	.....	.....	.....	.....	.....	.....	.....	12.10	2.25	8.40	1.08
3500	.....	.....	.....	.....	.....	.....	.....	.....	.....	.....	.....	.....	.....	.....	.....	.....	.....	.....	.....	.....	14.10	3.05	9.80	1.47
4000	.....	.....	.....	.....	.....	.....	.....	.....	.....	.....	.....	.....	.....	.....	.....	.....	.....	.....	.....	.....	.....	.....	11.35	1.92
4200	.....	.....	.....	.....	.....	.....	.....	.....	.....	.....	.....	.....	.....	.....	.....	.....	.....	.....	.....	.....	.....	.....	11.93	2.18
4500	.....	.....	.....	.....	.....	.....	.....	.....	.....	.....	.....	.....	.....	.....	.....	.....	.....	.....	.....	.....	.....	.....	12.78	2.43
5000	.....	.....	.....	.....	.....	.....	.....	.....	.....	.....	.....	.....	.....	.....	.....	.....	.....	.....	.....	.....	.....	.....	14.20	3.01

WROUGHT IRON AND STEEL, STEAM, GAS AND WATER PIPE
TABLE OF STANDARD DIMENSIONS

Diameter			Nominal thickness, in.	Circumference		Transverse areas			Length of pipe per sq. ft. of		Length of pipe containing 1 cu. ft., ft.	Nominal weight per ft., lb.	No. of threads per in. of screw
Nominal internal, in.	Actual external, in.	Approximate internal, in.		External, in.	Internal, in.	External, sq. in.	Internal, sq. in.	Metal, sq. in.	External surface, ft.	Internal surface, ft.			
1/8	0.405	0.270	0.068	1.272	0.845	0.129	0.0568	0.0720	9.440	14.15	2513.0	0.241	27
1/4	0.540	0.364	0.088	1.696	1.144	0.229	0.1041	0.1249	7.075	10.49	1383.3	0.42	18
3/8	0.675	0.494	0.091	2.121	1.549	0.358	0.1909	0.1669	5.657	7.76	751.2	0.559	18
1/2	0.840	0.623	0.109	2.629	1.954	0.554	0.3039	0.2503	4.547	6.15	472.4	0.837	14
3/4	1.050	0.824	0.113	3.299	2.589	0.866	0.5333	0.3327	3.637	4.635	270.0	1.115	14
1	1.315	1.048	0.134	4.131	3.289	1.358	0.8609	0.4972	2.904	3.645	166.9	1.668	11-1/2
1-1/4	1.660	1.380	0.140	5.215	4.335	2.164	1.496	0.6685	2.301	2.768	96.25	2.244	11-1/2
1-1/2	1.900	1.611	0.145	5.969	5.058	2.835	2.038	0.7995	2.010	2.371	70.66	2.678	11-1/2
2	2.375	2.067	0.154	7.461	6.494	4.430	3.356	1.074	1.608	1.848	42.91	3.609	11-1/2
2-1/2	2.875	2.468	0.204	9.032	7.750	6.492	4.780	1.712	1.328	1.547	30.1	5.739	8
3	3.500	3.067	0.217	10.996	9.632	9.621	7.388	2.238	1.091	1.245	19.5	7.536	8
3-1/2	4.0	3.548	0.226	12.566	11.146	12.566	9.887	2.680	0.955	1.077	14.57	9.001	8
4	4.5	4.026	0.237	14.137	12.648	15.904	12.730	3.175	0.849	0.949	11.31	10.665	8
4-1/2	5.0	4.508	0.246	15.708	14.162	19.635	15.961	3.675	0.764	0.848	9.02	12.34	8
5	5.563	5.045	0.259	17.477	15.849	24.306	19.985	4.321	0.687	0.757	7.2	14.502	8
6	6.625	6.065	0.280	20.813	19.054	34.472	28.886	5.586	0.577	0.630	4.98	18.762	8
7	7.625	7.023	0.301	23.955	22.063	45.664	38.743	6.921	0.501	0.544	3.72	23.271	8
8	8.625	7.982	0.322	27.096	25.073	58.426	50.021	8.405	0.443	0.478	2.88	28.177	8
9	9.625	8.937	0.344	30.238	28.076	72.76	62.722	10.040	0.397	0.427	2.29	33.701	8
10	10.75	10.019	0.366	33.772	31.472	90.763	78.822	11.940	0.355	0.381	1.82	40.065	8
11	11.75	11.000	0.375	36.914	34.558	108.434	95.034	13.401	0.325	0.348	1.51	45.950	8
12	12.75	12.000	0.375	40.055	37.700	127.677	113.098	14.590	0.299	0.319	1.27	48.985	8

Shifting belts have the advantage of simplicity and ease of operation and can be employed even for very long heavy belts and pulleys of large diameter. One such installation in my experience which was perfectly successful had two 11-in. by 5-ft. pulleys tight and loose on the driving shaft and one 21-in. by 5-ft. pulley on the driven shaft. The centers of the shafts were 35 ft. apart. The disadvantage of a shifting belt arrangement lies in the wear of the hub of the loose pulley, particularly when the belt is on it, and to a certain extent when the belt is on the fixed driving pulley owing to the rotation from the friction of the shaft. A shifting belt device cannot be used between the prime mover and the main shaft. If a steam engine is the prime mover devices for progressively throwing the load of the mill upon the prime mover will not be necessary, but even in this case, clutches or other devices performing their function are very convenient on starting up after repairing. When the mill is put in motion after a repair day, belts must be thrown on in all directions. The small ones can be thrown on the pulleys by hand but the large ones must be roped to the pulleys and the mill put in motion slowly to avoid accidents. If the belt fall off the pulley, the machinery must be stopped and a second trial made. This is a very inconvenient operation in a large mill without clutches or other devices for setting portions of the mill in motion, for signalling is difficult and much time is lost.

Water System.—To calculate the head of water required to maintain the required flow in all parts of a piping system, recourse may be had to the accompanying table showing the head lost in feet in pipes of various sizes for 100 ft. of length. Start at the bottom of the system and calculate first the friction in the smallest risers. For example—suppose it be required first to determine the friction head (the extra head which must be added to the velocity head to overcome friction) for lengths of pipes 10 ft. long and supplying 20 tables and vanners, each pipe being required to supply on an average 5 gal. per minute. Let a 3/4-in. pipe (see accompanying table of pipe sizes) be adopted as the smallest supply pipe used in the system. We then have 200 ft. of 3/4-in. to deliver 5 gal. of water or what is the same thing, 20 pieces of pipe 10 ft. long each delivering 5 gal. From the table it is seen that the friction head is 15 ft. This will be too large an amount. Again looking in the table it will be seen that 1-in. pipe causes a loss in head per 100 ft. of roughly but one-third the 3/4-in. pipe, and 1-1/4-in. pipe about one-seventh. The price of these pipes per foot are in the ratio 1, 1.4 and 1.9. For a long complicated system it may be necessary to begin with a 1-1/4-in. or even a larger size. If the main which feeds the small risers is carried under the floor there will be required three 90-deg. elbows to carry the water to the concentrating machines, whereas if the pipe is carried overhead, but one elbow will be required for each machine. One gate valve will be required for each machine. The friction in the elbows can be computed from the table.

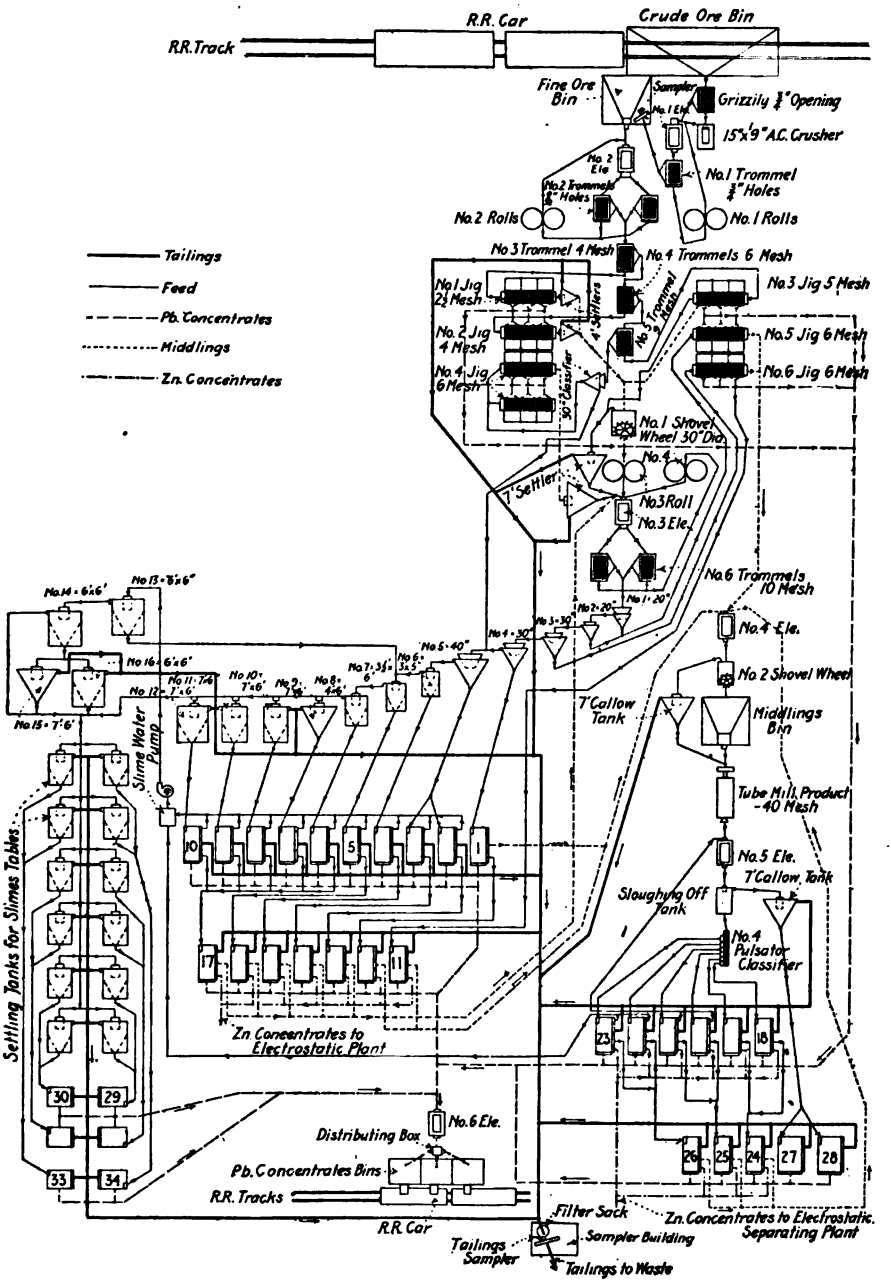

FIG. 65.—U. S. S. R. & M. Co., Midvale, Utah.

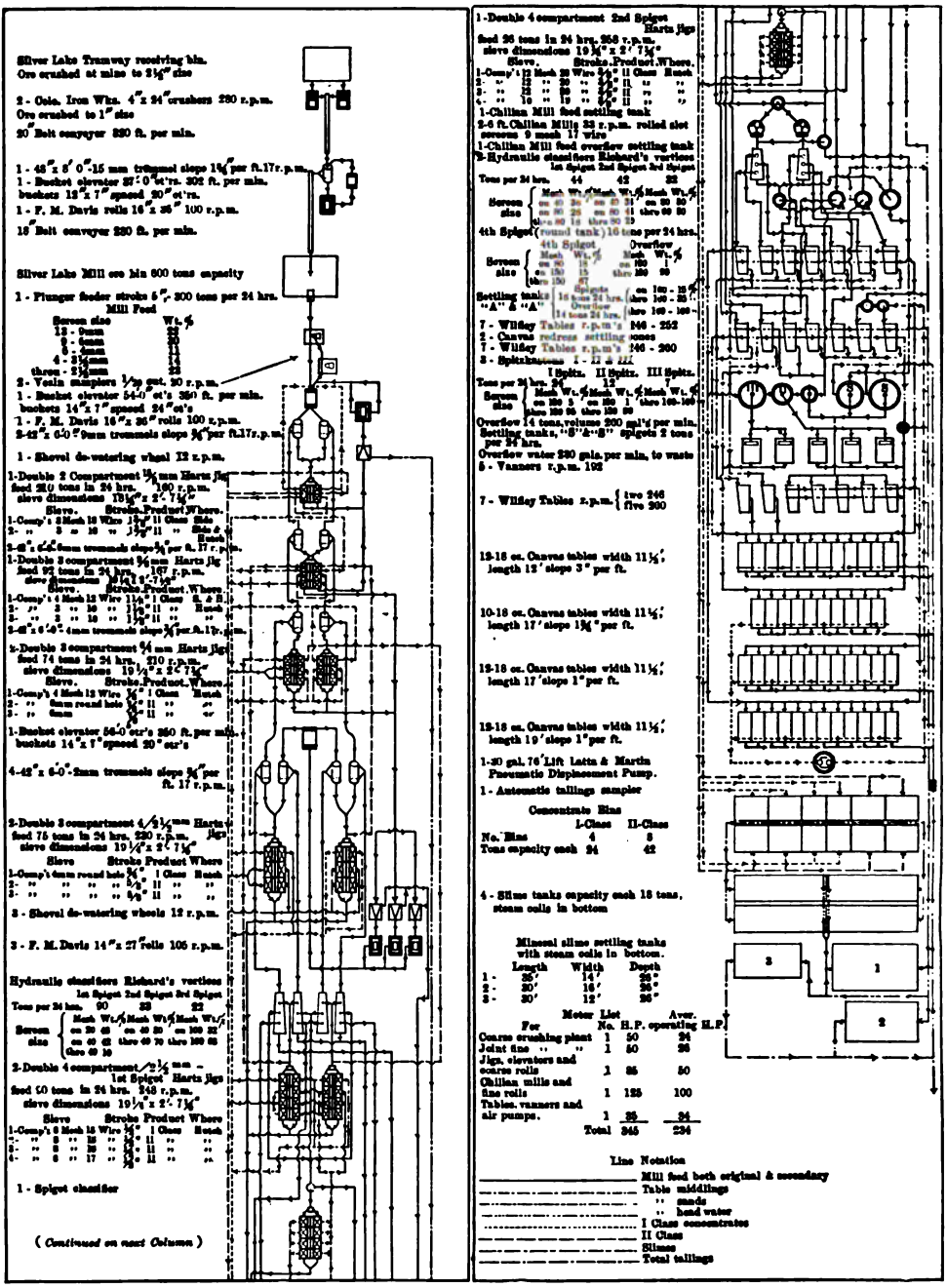

FIG. 66.—Silverlake Mill, Silverton, Colo.

For gate valves the friction may be taken as zero if the gate is wide open and for ratios of $\frac{d'}{d}$ of 1/8, 1/4, 3/8, 1/2, 5/8, 3/4 and 7/8, the heads for overcoming friction is $w\frac{v^2}{2g}$ where w is respectively 0.07, 0.26, 0.81, 2.1, 5.5, 17 and 98. In practice, however, the question of the friction of valves is not a practical one, that is, the supply system must be laid out so as to give to

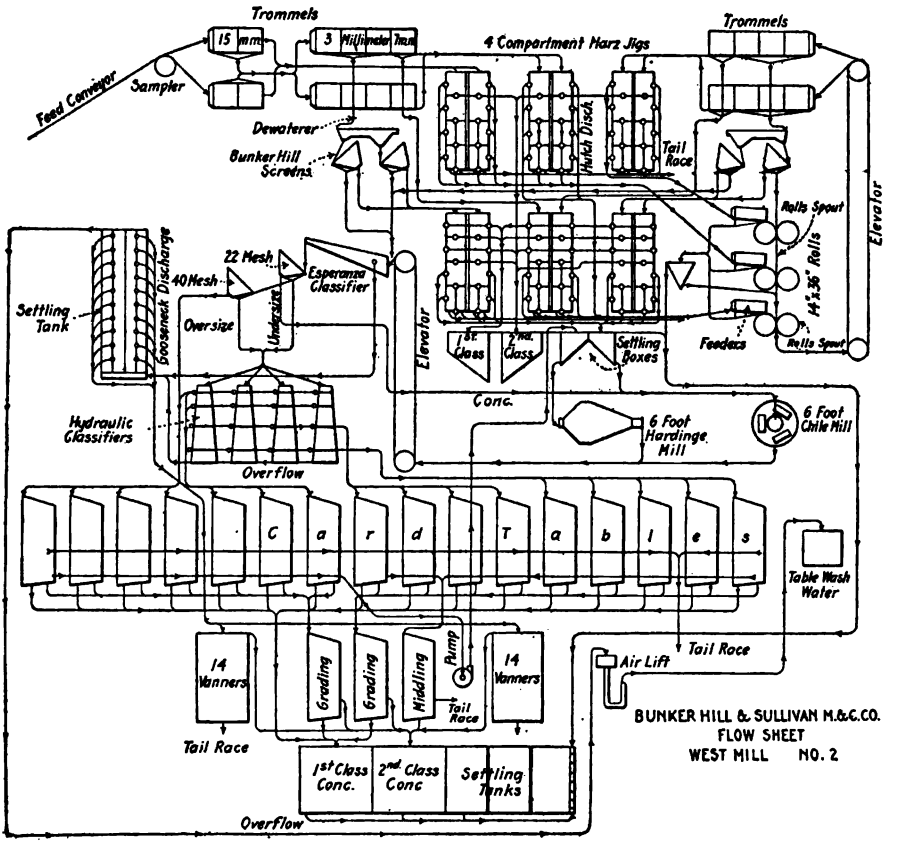

FIG. 67.

each machine the maximum it will require and if a less will do the work it can be attained by throttling *at the machine.* If 1-in. pipes are adopted, then the main must be 4–1/2 in. in diameter (see table of areas of pipe). If the tables are 10 ft. apart the main must be 200 ft. long in the portion facing the tables, and supply 100 gal. of water per minute. For computing the friction, the pipes may be considered to be 100 ft. long and the friction head required is 5 ft. Suppose now the pipe runs an extra 100 ft. to a tank, there being three 90-deg. elbows, then the total friction head of the surface of the water above the outlets of the table is the sum of the following heads:

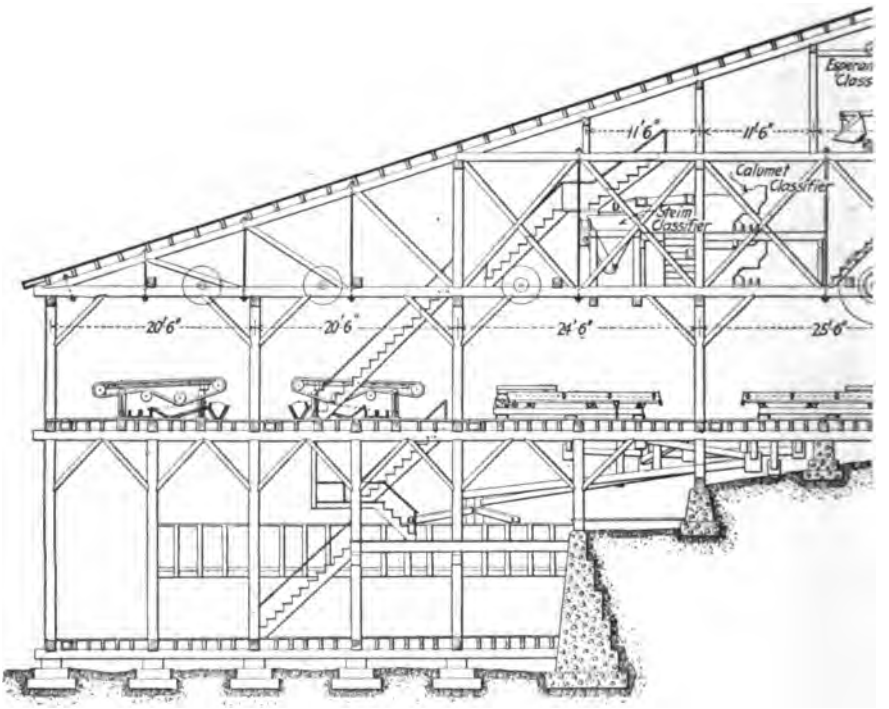

FIG. 68.—Longitudinal Section.

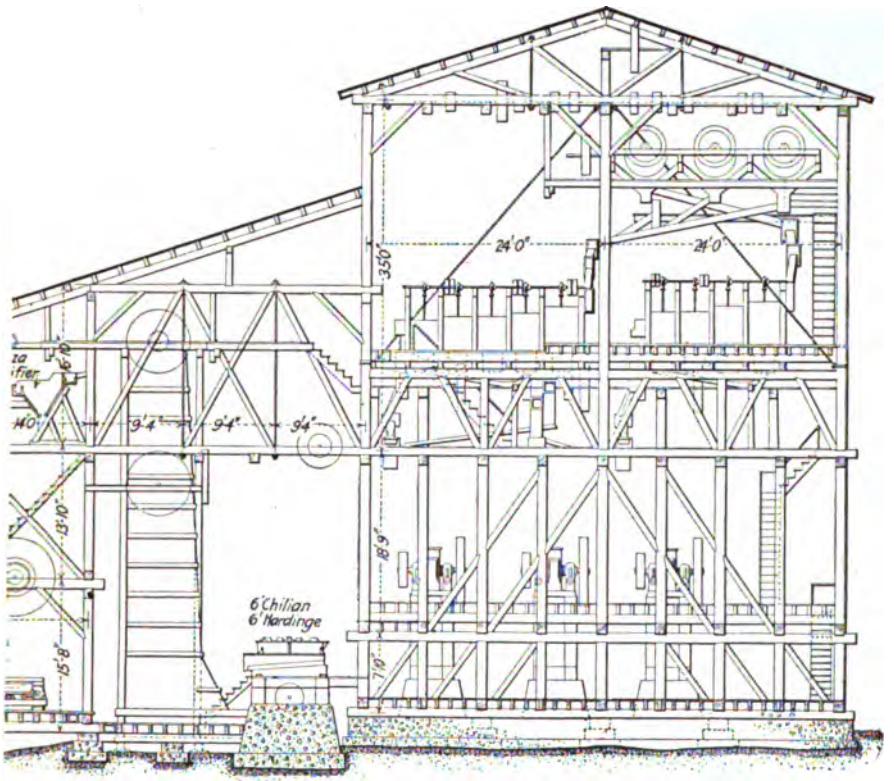

B. H. & S. M. & C. Co., West Mill No. 2, Kellogg, Idaho.

	Friction head
20 risers 1-in. pipe	4.64 ft.
60, 90-deg. elbows, 1-in.	3.60 ft.
200 ft. 4-1/2-in. pipe	1.70 ft.
3, 90-deg. elbows, 4-1/2 in.	0.20 ft.
	10.14 ft.
Add 10 per cent. for miscellaneous friction loss	1.01 ft.
	11.15 ft.

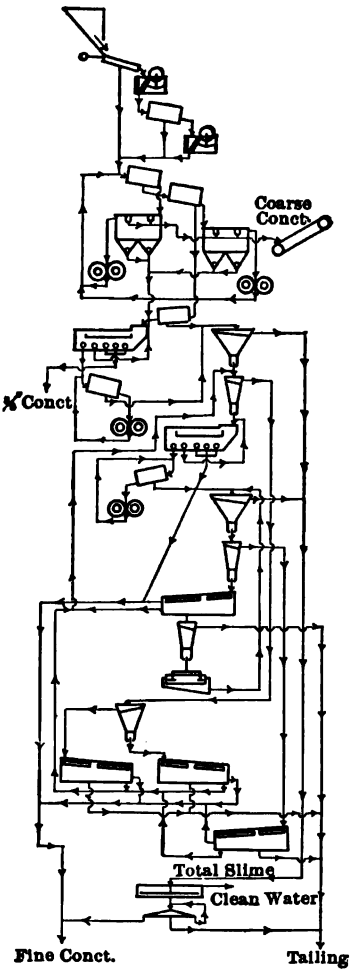

1 Ore Bin.

2 Shaking Screens, 2-in. Round Hole.

1 Blake Crusher, 12 by 24 in.

2 Trommels, 2-in. Round Hole.

2 Blake Crushers, 5 by 15 in.

4 Trommels, 1-in. Round Hole.

4 Trommels, 10 mm. Round Hole.

2 2-Comp. Harz Jigs (Coarse). 2 2-Comp. Harz Jigs (Fine).

1 Set of Rolls, 24 by 54 in. (Coarse). 1 Set of Rolls, 24 by 54 in. (Fine).

8 Trommels, 4 mm. Round Hole.

2 Hancock Jigs (Coarse). 6 No. 1 Anaconda Classifiers.

6 Trommels, 4 mm. Round Hole. 6 No. 2 Anaconda Classifiers.

1 Set of Rolls, 16 by 42 in. 3 Hancock Jigs (Fine).

8 Trommels, 1.25 by 12-mm. Slots.

2 Sets of Rolls, 16 by 42 in. 8 No. 3 Anaconda Classifiers.

6 No. 4 Anaconda Classifiers.

9 Wilfley Tables (Coarse Middling).

2 No. 5 Anaconda Classifiers.

4 Huntington Mills, 6 ft.

3 No. 6 Anaconda Classifiers.

19 Wilfley Tables (Fine Primary). 12 Wilfley Tables (Coarse Primary).

23 Wilfley Tables (Secondary).

14 Dorr Thickeners, 28 by 3 ft.
35 Round Table Decks (Concrete).

FIG. 69.—Anaconda Unit, Great Falls, Montana.

The velocity head is but 0.24 ft., since $h = \frac{V^2}{2g} = \frac{(3.93)^2}{64.4} = 0.24$ the velocity in feet per second for delivering 200 gal. per minute being but 3.93. Hence the total head required is 11.15 ft., or, in round numbers, 11 ft. These computations will serve to show how the piping problem is to be attacked.

Some flow sheets of American Mills and a longitudinal section of the Bunker Hill mill are shown in Figs. 64 to 69 inclusive.

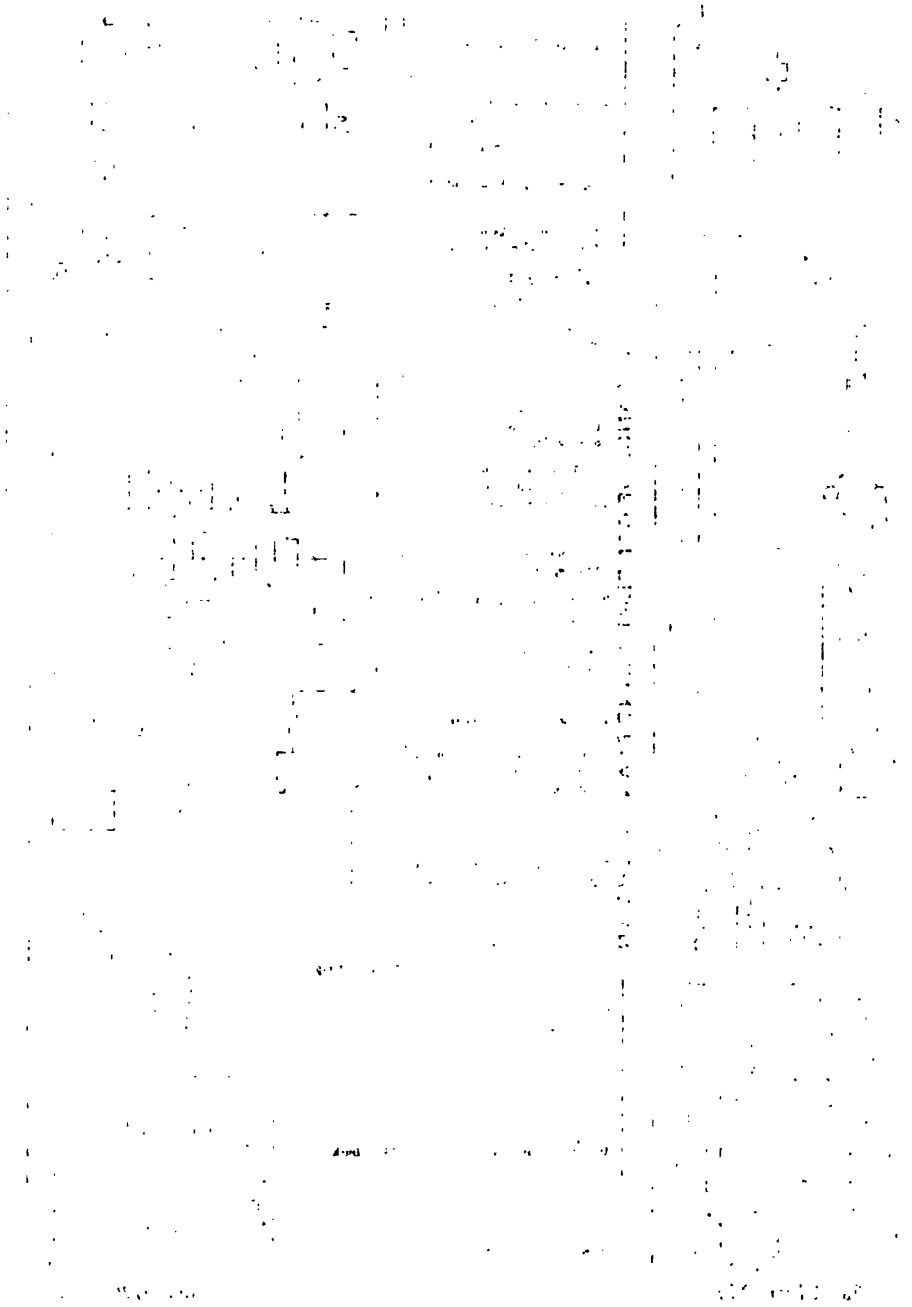

CHAPTER VI

GENERAL DISSERTATION ON CRUSHING

Heavy Crushing Machinery

For purposes of discussion a mass of ore or rock may be considered to consist of pieces which are homogeneous collections of particles bonded together by a pull which is equal in all directions. If m equals the pull of the particle in a plane taken in any direction through a piece of ore or rock, per unit of this plane, and a force Pm is applied parallel to this plane then Pm will be the breaking load in shearing where P is the area of the plane where it cuts the solid. It must be evident also that the shearing strength of the material is equal to its tensile strength, or exertion necessary to pull it apart. If the pull of a unit area is m, the force required to move an equal parallel area adjacent past it is the same as though its weight were m, therefore the force required to move it is m/g times g or m the pull required to separate it. If a homogeneous block of rock be subjected to pressure, the bed upon which it rests and the face upon which the pressure is applied being parallel, then if the height of the block does not exceed $3/2$ the width, in the simplest mode of fracturing it must give way along some plane other than those parallel to or at right angles to the direction of the pressure. To determine the angle that the plane of yielding makes with the direction of the pressure, we may reason as follows: Let P be the total operating pressure applied at right angles to the parallel faces. If θ is the angle the breaking plane makes with the horizontal, then the shearing stress along the plane is $P \sin \theta$. If S equals the area of a plane at right angles to the application of pressure then the unit stress p is P/S. The unit stress on the inclined plane is $p' = \frac{P \cos \theta}{S}$. The unit shear is $p \cos \theta \sin \theta$ which is a maximum when θ is 45 deg. Consequently in an isotropic material where the height of a block under pressure is not too great, yielding will occur along planes inclined at 45 deg. with the line of pressure. With cast iron the angle has been found to be 55 deg. for a simple fracture. It must be evident that there can be no choice in the direction which the plane takes. It is consequently very common to see a system of conjugate planes developed in a test specimen of rock or other material which has been crushed, Figs. 70 and 71, but in a case of this kind the yielding must be considered progressive though almost instantaneous, that is, the weakest shear plane gives way first, followed by the others. It can readily be seen that the total work done on the test specimen from the initial moment of yielding is proportional to the area of the shear-

ing surface. A statement commonly made is that the power required in crushing is proportional to the superficial area of the broken pieces. If for clearness of thinking we assume that the broken pieces are cubical or that their superficial area is equal to that of cubes of the same volume, then it may be written that the power required in crushing is proportional to the expression $6W/wsl$ where W is the total weight of the pieces, w the weight of a unit cube of water, and s the specific gravity of the cubes and l the average length of side of equivalent cubes.

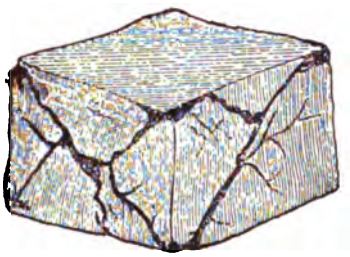

FIG. 70.[1]

This expression is obtained as follows: If the rock after crushing is submitted to a sizing operation and we wish to determine the power required to crush it between the limits of screen opening l' and l'', l being the average, then it will be evident that the number of particles of total weight W between the limits of size l' and l'' will be W/wsl^3. Then the area exposed by one particle is $6l^2$ and for the total number of particle

FIG. 71.[2]

$6l^2W/wsl^3$ or $6W/wsl$ as before an expression proportional to the power consumed. This expression may be written E equals A/l, E being the energy consumed in crushing; A, a constant varying with different materials

[1] Encyclopedia Brittanica, XIth Edition.

[2] Tests of metals, Government Printing Office, Washington, D. C., 1884.

and conditions and l being the mean dimension of the crushed material. This is the equation of an equilateral hyperbola and is a fundamental expression in studying crushing problems. A convenient method of keeping this expression in mind is to assume that the power consumed in crushing is proportional to the reciprocal of the diameter to which the ore is crushed. This has been called Rittinger's Law.

A method of comparing the power required in crushing, where two machines of different makes are operated on the same ore or rock and usually where they are crushing to the same mesh, is to screen the ore or rock before and after it enters the comminuting machines on a series of sizing machines, assigning to each of the sizes resting on the screens the average of the mesh opening for the size l of the particles of the next larger screen and the screen upon which the size rests; then by the formula $6W/wsl$ a value can be obtained for each size which measures or represents the power consumed. By subtracting the sum of the energy units from the feed or ingoing units, an expression is obtained measuring the total power consumed and on going through these calculations for both machines and knowing the power they require, a fairly close estimation of the useful energy they consume can be obtained. There is much error in an assumption of this kind, first because the actual power consumed is not so great as indicated by sizing and the variation becomes greater the finer the size of the screenings. Again it is assumed that the value of l for minus 200-mesh material is the arithmetical mean of the size and zero. Now the actual value of l for this range of sizes may be something very different from this arithmetical mean for the reason that two machines of different makes may (in one case) produce minus 200-mesh material which averages near this size while in the other machine the average size may lay near to zero; since the power increases very rapidly with diminution of size, the first machine will report too high a power consumption and the second machine very much too low. Some of the reasons why the power consumption is less in the fine sizes than indicated by sizing test are: (1) The pieces resulting from a crushing operation fly apart and the energy of that motion breaks off projecting surfaces by a bending action; (2) in fine crushing machines the action of the machine often sets the whole, or a portion of the mass in motion, producing a multitude of impacts of the grains with one another and the boundaries of the machine causing as before bending or abrasive actions; (3) grinding forces consume less power than shearing, see pages 168 and 179. It must be evident that these secondary crushing actions either require no power, or far less power than would be required by direct shearing. The amount of secondary material must increase as the ore is successively crushed to lower and lower limits of size.

Of late years the laws governing power consumption in crushing have received some attention owing to the work of an investigation which is based on a fundamental assumption, differing from that of Rittinger, that the power

required in crushing is proportional to the reciprocal of the diameter of the crushed grain; viz., that the work performed is proportional to the reduction in volume as to each change in diameter, the rock or ore being assumed to be reduced in arithmetical progression thus, from 1 in. to 1/2 in. to 1/4 in. to 1/8 in., etc., each reduction requiring a constant energy consumption. It is not quite clear why such a principle has been advocated for energy consumption in crushing other than that certain relations have arisen from the examination of sizing tests, one of which is that the product of the volume of particles of any average range of size as determined by screen sizing by the number of particles is a constant. In order to satisfy the principle of crushing stated, it would be necessary for a rock to yield up to the elastic limit as perfectly elastic bodies do. If two cubes of rubber, considered as examples of perfect elasticity, one of edge l and the other $\frac{l}{u}$, are subjected to a compressive stress of F lb. per square inch and under this stress the larger yields to a depth d, then the total energy consumed is Fl^2d. Now the smaller cube which is submitted to a total stress of $\frac{Fl^2}{u^2}$ will be found to yield to

HAVERSTRAW FREESTONE

TEST NO. 245

Length, 8.96 in.
Compressed surface, 9.07 in. × 8.99 in. equals 81.54 sq. in.
Weight, 56 lb.
Total thickness of plaster, 0.09 in.

Applied loads		Compression, in.	Set, in.	Remarks
Total, lb.	Lb. per sq. in.			
5,000	.....	0.000		
40,000	.....	0.0095		
80,000	.....	0.0172		
100,000	.....	0.0220		
5,000	.....	.....	0.0110	
100,000	.....	0.0222		
140,000	.....	0.03000		
180,000	.....	0.0375		
200,000	.....	0.0400		
5,000	.....	.....	0.0220	
200,000	.....	0.0410		
240,000	.....	0.0460		
280,000	.....	0.0510		
300,000	.....	0.0532		
5,000	.....	.....	0.0270	
300,000	.....	0.0542		
340,000	.....	0.0582		
380,000	.....	0.0625		
400,000	.....	0.0642		
470,400	5,770	.....		Ult. Strength.

a depth $\frac{d}{u}$ and the total energy consumption is $\frac{Fl^2d}{u^3}$, or, in other words, the yielding is proportional to the volume. This law, known as Kick's Law, cannot possibly have any application in a rigid body such as rock or ore, and there is direct experimental evidence that it is not applicable as a law though it may furnish useful basis for analysis in crushing problems.

HAVERSTRAW FREESTONE[1]

TEST NO. 259

Length, 12 in.
Compressed surface, 11.96 in. × 12 in. equals 143.52 sq. in.
Weight, 135-1/2 lb.
Total thickness of plaster, 0.20 in.

Applied loads		Compression, in.	Set, in.	Remarks
Total, lb.	Lb. per sq. in.			
5,000	.....	0		
40,000	.....	0.0102		
80,000	.....	0.0170		
100,000	.....	0.0192		
5,000	.....	.....	0.0090	
100,000	.....	0.0200		
200,000	.....	0.0288		
5,000	.....	.....	0.0120	
200,000	.....	0.0290		
300,000	.....	0.0355		
5,000	.....	.....	0.0142	
300,000	.....	0.0355		
400,000	.....	0.0420		
5,000	.....	.....	0.0160	
400,000	.....	0.0420		
500,000	.....	0.0485		
5,000	.....	.....	0.0180	
500,000	.....	0.0490		
600,000	.....	0.0560		
5,000	.....	.....	0.0225	
600,000	.....	0.0570		
700,000	.....	0.0658		
5,000	.....	.....	0.0225	
700,000	.....	0.0675		
740,000	.....	0.0727		
764,000	5.323	.....		Ult. Strength.

On examining the tests here appended it will be seen that the breaking strength is independent of volume and the compression independent of volume and area of surface compressed. It will also be noted that there is no such thing as elastic limit pertaining to rock; the deformation up to the breaking stress is slight and due to forcing of the grains of the test piece in its pore spaces. Since the ultimate compression is practically the same, in both cases,

[1] "Tests of Metals," etc., Government Printing Office, Washington, D. C., 1884.

and the work proportional to the compressive surfaces, the work will be proportional to the shear surfaces, whatever they may be.

Classification of Crushers.—Classifications of crushing machines have been proposed on the basis of the direction of application of pressure or stress such as machines employing diametral crushing, as stamps; radial crushing, rolls and Blake crushers; shearing, Huntington Mills, etc. It would seem, however, that classification should be according to machines, that is, according to the mechanical differences in which they do crushing. Fixing the mind on an individual piece of ore or rock, it is difficult to conceive much essential difference in the number and size of particles resulting from a direct application of force, even though there be a difference in the direction through which the force is applied.[1]

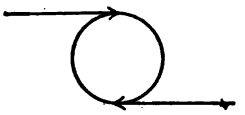

FIG. 72.

In the classification by shearing the force is supposed to be applied in the manner indicated by Fig. 72. Such a mode of application would have no effect except to rotate the grain and only by a direct compression, the lines of action and reaction intersecting one another, can any crushing be done. In the case of the Huntington Mill which is cited as an example of shearing, it is difficult to see what essential difference there is between the mode in which it performs its work on a single piece caught between the crushing pieces, and rolls and breakers.

The amount of reduction by grinding increases in the different classes of machines, being least in the coarse crushing class and most in the fine. Considered in its simplest form grinding forces may be assumed to be applied in a direction parallel to the bed on which the grain rests. Unless the grains are firmly held on the bed by other grains surrounding it some of the force of the crushing surface must be assumed to be applied at right angles to the bed on which the grain rests and such component of the applied force may vary from an amount sufficient to crush the piece by compression to zero. When the grain is held on the fixed crushing surface merely by friction the amount of material which can be ground off before it starts to move is very small. In order to understand the effect of the grinding or abrasive component when acting under the most favorable condition for crushing, let it be supposed to be applied at the edge of the cube of side l, Fig. 73, A–B being a plane to which the force is parallel and separating the cube from a portion of an immovable mass of rock or ore. The cube may be considered as a beam fixed at one end, free at the other and loaded at this end. Since the length, breadth and depth are the same, all the dimension values in the formula for breaking load may be substituted by l. The load W required to break the cube away from the plane A–B is

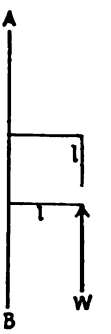

FIG. 73.

[1] Where the application of pressure is at a point or line the shear planes start from such point or line.

$\frac{fl^2}{6}$, where f is the modulus of rupture in pounds per square inch, W being also in pounds, and l the edge of the cube in inches; fl^2 would be the force required to shear the cube from the surface, but by grinding pure and simple only one-sixth of the shearing force is required. This is one of the reasons as noted on page 164 why the power consumed in crushing departs the more widely from Rittinger's law as it is carried finer. Where a mass of rock is attached by a grinding surface the most favorable way for the mass to yield would be by the breaking off of particles whose edge l would be very small, for the breaking force diminishes as l^2 diminishes. Grinding consequently produces a large amount of slime.

The difference between coarse and fine crushing machines lies largely in the greater time the individual pieces, as fragments, are kept in the latter machines.

The only division between crushing machines in which shearing is the principal action is between ones where the rock or ore is held by an immovable mass and crushed by a mass moving toward it, or caught between two or more moving crushing masses in which the ore is crushed by impact, the ore piece being suspended in the air when struck by the moving part of the machine performing the crushing.

Efficiency of Crushers.—To determine the relative efficiency of the various modes of crushing the following problem may be considered. A beater of mass m_1 and with a velocity U_1 hits a mass m_2 of rock, to determine the force of impact; (*a*) when mass of rock is momentarily poised and at rest; (*b*) when it has a velocity U_1 in the direction of motion of the beater; (*c*) when it has a velocity U_2 opposite to the direction of motion of the beater, and (*d*) when the mass of rock is immovably fixed. The first three cases would apply to breaking by impact and the last to positive crushing. A fifth case (*e*) might be considered when the velocity U_1 of the beater had been communicated to the mass and the mass of rock had reached the immovable case, or boundary of the crushing machine, with this velocity as a maximum. It will be seen that this case is but a special one of case (*d*). Impact actions of kind (*d*) are multitudinous in impact machines having a series of beaters in either a fixed or a moving case, which may be considered immovable so far as impact goes, but they are efficient only in the ratio of the mass of rock to that of the beater. The fundamental formula for considering the problems is

$$F_c = (U_1 - U_2)\sqrt{\frac{m_1 m_2}{(m_1+m_2)g}\cdot\frac{H_1-H_2}{H_1+H_2}}.^1$$

F_c equals force of compression,
U_1 equals velocity in feet per second of beater,
m_1 equals mass of beater,
U_2 equals velocity in feet per second of piece of rock,
m_2 equals mass of rock,

[1] "The Mechanics of Engineering," Jay DuBois, New York, John W. Frey & Sons, 1902.

H_1 equals $\frac{A_1E_1}{l_1}$, where A_1 equals area of striking face of beater, E_1 its coefficient of elasticity and l_1 its length (or depth),

H_2 equals $\frac{A_2E_2}{l_2}$, where A_2 equals area of struck face of rock, E_2 its coefficient of elasticity and l_2 its length (or depth).

Coefficient of elasticity if S is a stress (compression) on a surface A, then $\frac{S}{A}$ is unit stress in pounds per square inch. If l is length of specimen under compression, then $\frac{L}{l}$ is the unit strain or strain per unit of length; then $\frac{S/A}{L/l}$ equals the coefficient of elasticity where L is the total strain.

Let it be assumed in making a comparison between positive and impact crushing that H_1 and H_2 and U_1 are the same for each kind, then we need consider only that part of the right-hand expression which involves velocities and masses. Grouping cases *a*, *b*, and *c*, an average value for the expression $U_1 - U_2$ is obtained as follows: Case (*a*) $U_1 - U_2$ becomes U_1. Case (*b*) $U_1 - U_2$ becomes 0. Case (*c*) $U_1 - U_2$ is a maximum when U_2 equals U_1 or $U_1 - U_2$ becomes $2U_1$. The average value for the expression is U_1. For argument, assuming that m_2 is 1 and m_1 10. Then for cases *a*, *b*, and *c*, the expression becomes $U_1\sqrt{\frac{10}{11g}}$. In case (*d*) U_2 is 0 and m_2, while nominally 1, is really infinite; consequently its comparative expression becomes $U_1\sqrt{\frac{10}{g}}$. In order that the last two expressions may be equal, U_1 of the first three cases must be multiplied by $\sqrt{11}$ or, in other words, the impact machine must have over three times the velocity of the positive machine to do the same work. It will be noted that F_c increases directly as the velocity of the beater and increases very slowly when the mass of the beater is increased. It is common in impact machines to have comparatively light beaters and high velocity, but the only field for machines of this kind is where an easily broken rock, such as coal, slate, limestone, or cemented placer gravel, must be lightly crushed. In such cases the ratio of power consumption while crushing to power consumption while running may be favorable to the impact machines, for a large proportion of the power in the heavy positive machines is used in overcoming the inertia of the moving parts and the first cost of the impact machines is low. For difficult crushing problems this type of machine will not apply, not only from the low efficiency but also from vibration and other difficulties which arise from the high speed.

As has already been intimated in the earlier chapters, unlocking must precede separation. In the various stages of reduction those well recognized grades of crushing machines are recognized depending upon the degree of reduction. Coarse breakers for reduction from mine size to 1–1/2 to 2 in.

are typified by the Blake and Gates styles of breaker; medium crushing machinery for reduction from this range down to 10 mesh is preeminently suited to rolls, and from the last given size down to 120 mesh and finer fine grinding machinery is suitable. The last class is represented by machines of many types, among which may be mentioned edge runners and tube mills. Of late years the tube mill has begun to enter the field of edge runners in fine grinding hard concentrating ores. Fine grinding machines will be dealt with in the chapters following; coarse and medium breakers will be taken up in order.

Preliminary Crushing.—The degree to which preliminary crushing in any milling operation will have to be carried will have been indicated by the test work. In reduction by machinery the principles have been laid down that preliminary crushing should not be carried down to a further degree than necessary to effect sufficient unlocking for the first separating operation. Since crushing to the limiting size in one operation, especially if the limit be low, entails the production of a larger proportion of finer material than necessary, the second principle has been laid down that the reduction should proceed by stages and the ratio of any single reduction should not exceed four. The reason for this dictum lies first in the conception that to avoid so far as possible the making of fines the individual pieces in the crushing machine should be subjected to as few breaks as possible, the ideal condition being that after the pieces have received a pressure sufficient to fracture them, they should be released from the machine immediately. In coarse crushing machines the pieces are always between fixed or moving faces and the space between these faces diminishes to the point where the fragments resulting from crushing leave the machine. The nearer the width of the seizing or nipping point to the egress point, the more perfectly will the ideal condition for crushing be obtained; in other words, the lower becomes the ratio of crushing. The other reason for low ratios in reduction is that for any considerable capacity it is cheaper.

In order to obtain capacity in the coarse crushing machines the advance from seizing space to egress opening must be quite rapid. In breakers the ore moves through by gravity aided by the movements of the machine. In rolls gravity assists in carrying the ore to the seizing or nipping point, from which point it is brought to the egress point by the rotation of the rolls. Fine crushing could not be performed by machines of the coarse crushing types because there would be sufficient lost motion to make the egress opening greater than the seizing opening. Again, owing to wear of the crushing surfaces the same condition would prevail. A different mode of crushing must be provided and almost universally in fine machines the material to be crushed is introduced into the machine, the ore being crushed by being caught more or less in mass between a moving crushing surface and a fixed one. Egress is retarded either by restricting it by screens of fine mesh, or making the path to the point of egress long, as in tube mills. By so doing

the ore grains have numerous opportunities to come under the crushing surfaces. The moving crushing surface is so arranged that it can move up to and come in contact with the fixed one if there be no ore between them. For example, in the case of Chilian mills, heavy rollers are free to revolve on crushing rings or at any point above them, depending upon the amount of ore between the roller and wearing ring. Similar arrangements are provided in Huntington mills, the pressure on the wearing ring being lateral and obtained from the centrifugal force of hinged rollers mounted on revolving arms. In tube mills where there is falling pebbles, there is no restriction to its falling until it encounters the face of another pebble, considered for analogy the fixed crushing surface except the ore between the pebbles at the moment of impact. Rolls for very fine crushing are often run with faces in contact and under heavy pressure producing a strong crushing effect known as "choke feeding," and analogous to the action already described. The fault of the fine-ore crushing machine is that there is no fixed path from seizing point to egress point.

In the repeated crushing actions there is little or no selective action between coarse grains needing further crushing and fine ones on which crushing action is sufficiently complete and an undue amount of fine material is made. On the other hand it may be laid down as a fixed principle that fine crushing can only be done *en masse*, that is where the grains or pieces of rock are crushed in a column more than one deep and it is probable that improvements in fine crushing machinery will tend toward providing some means by which the finished grains are removed from the machine as fast as made.

Of late years, there has been a tendency to employ rolls of large diameter in crushing plants and this practice seems to have its origin in the following conditions: (1) large tonnages necessitating large breakers which do not efficiently break to 1–1/4 to 1–3/4 in., the limit of nipping by medium sized rolls; (2) increase in average run of mine sizes due to colossal mining operations of a quarrying character, and requiring in order to maintain good ratios of reduction the discharge of material of over 2-in. size, from the first breakers. In large crushing plants where good facilities for repair can be afforded and labor is ample the repair of heavy crushing machinery is not a serious matter, but in a medium or small sized plant the time lost in repairs to large rolls would be too great to permit of their use, carrying the work of rolls squarely up into the breaker field.

The *reductio ad absurdem* of such a substitution will be seen on considering rolls for crushing rock 8 in. to 2 in. with smooth faced rolls. A roll over 14 ft. diameter would be required, and the enormous single weights of such rolls can readily be imagined. The capacity of the different groups falls off very rapidly as the ratio of crushing is increased and the capacity of the group below is always highest where the one above is lowest, the result being, as experience has shown, that above a ratio of reduction of 4 to

1 the machines of the group below have a greater capacity, and at the same time their weight is not excessive.

Various combinations of the principles of one group with another have been tried in the endeavor to obtain a machine having an economical high ratio. The trouble with such devices is their complexity, and hence the difficulty of keeping them in repair. For small or transient milling operations and experimental work, their use will often be warranted.

Blake Breaker or Crusher.—The Blake breaker was the invention of Eli Whitney Blake, a nephew of Eli Whitney, the inventor of the cotton gin. The original patent was granted in 1858. Blake's attention to machine crushing was first attracted in 1852 while he was a member of the committee appointed to supervise street making in the town of Westville, Connecticut. The first application to mining was in 1861 at the Benton stamp mills on the Merced river, Mariposa County, California. At the time of the introduction of the crusher which was made in New Haven and shipped around the Horn in a sailing vessel, the preparation of rock for the stamps was being done by 25 Chinamen who broke 25 to 30 tons a day. "When the first block of quartz was dropped between the jaws and disappeared below in heaps of fragments, the Chinamen crowded around in amazement, and realizing that their occupation had gone, threw their hammers away."[1]

In the early forms of the machine a backward and forward motion was communicated to the swing jaw through toggles actuated by a lever, which, in turn, was connected with the driving shaft. It is said that the very earliest form has the greatest motion of the swing jaw at the top, but that Blake soon saw that no capacity was to be obtained from this arrangement and quickly abandoned it. The modern form in which the toggles are moved by a pitman suspended on an eccentric shaft, was later evolved by Blake, and is universally manufactured today without any essential changes from Blake's original designs.

The principal advantage enjoyed by the Blake crusher is that the crushing pressure exerted by the swing jaw can increase with the advance of the jaw, and, in theory, the crusher being properly dimensioned to this end, the crushing pressure may be increased to any necessary degree at the end of the stroke. Again the pressures of crushing increase directly as the distance upward from the egress point, so that at the top where ore and rock of the largest size more or less fills the crusher solidly, there is greater pressure available than at lower points; or, in other words, the pressure at different points, is proportional to the resistance to be overcome. All this will be understood from the diagram, Fig. 74, where the pressure P exerted at the point a of the swing jaw ab is to the pull P^1 of the pitman D in the ratio $P:P^1 = \cos \alpha: 2 \sin \alpha$, α being the angle made by the two toggles ad and dc with the horizontal line ac, the seats of the toggles being supposed to be in the same hori-

[1] The Blake Stone and Ore Breaker, by William P. Blake. *Trans.* A.I.M.E., vol. 33.

zontal plane, as they usually are. From the equation given, $P = P^1 \cos \alpha/2 \sin \alpha$. As α approaches the zero position, P very rapidly approaches infinity. If α is zero, as it will be if the toggles can be drawn up to a horizontal position, P becomes infinitely great. The pressure at any point between ab, measured from b, is evidently $lP^1 \cot \alpha$ divided by $2x$, where x is the distance measured from the fulcrum point b, and l is the length from the fulcrum point to the point of application of pressure by the toggle.

The relation of eccentricity to movement of jaw, and other relations of the crusher, can be obtained from the accompanying diagram; where f is the length from the center of suspension of the swing jaw to the center of the jaw toggle; a the horizontal difference between the swing jaw center and the center of the pitman shaft in the frame bearings; b the vertical difference between the same points; c the distance from the center of the non-eccentric portion to a line passing through the pitman and the toggle seat centers; d width of pitman, and e length of toggle. These dimensions with $d/2$ in place of d, form a five-sided figure as reference to the diagram (Fig. 75) will show, with sides a, b plus c, $d/2$ and e and f. The first solution desired may

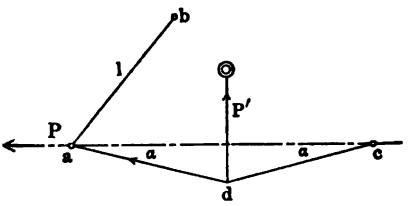

FIG. 74.

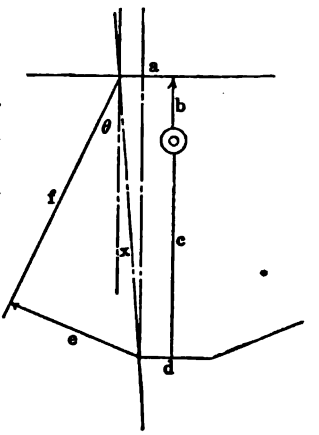

FIG. 75.

be the angle θ made by the swing jaw axis measured from center of swing jaw shaft to the end of jaw toggle. This may be obtained as follows, structural line x making a triangle with sides f, e and x, has a length $\sqrt{(a-d/2)^2+(b+c)^2}$; given x, f and e the angle bounded by sides f and x may be obtained. The sine of the angle formed by sides x and $b+c$ equals $\frac{a-d/2}{x}$. The difference between the two angles in the two positions will be the angular movement of the jaws, λ, and to find the movement at any point on the jaw at any distance x from the fixed center of the swing jaw, x must be multiplied by $2\pi\lambda$, λ being expressed in degrees and fractions of a degree, divided by 360.

Increase in the length of the pitman causes greater movement of the swing jaw. Increase in the length of the toggle reduces movement of the swing jaw. Greater movement of the swing jaw gives greater capacity, but increases the strain on the working parts. The factors for capacity are

revolutions, the capacity of the machine increasing with both speed of rotation and minimum set; the greater the egress opening when jaws are in closest position, the greater the capacity. The less the angle the swing jaw makes with the vertical, the greater the capacity, but at the same time it will be understood the less will be the ratio of crushing unless the length of jaws be unduly great. Coupled with the angle of the jaw is the stroke of the machine, slight angles and much throw giving large capacity. In order that the variation of capacity with the variation of the angle θ may be understood, let y, Fig. 76, be the maximum width of egress opening, let x be the inlet width of opening, less the width of egress opening, and consequently $x + y$ the width of inlet opening. Let d equal the vertical depth of jaws, $1/a$ the ratio of reduction of size at any point in the crusher due to a single action of the machine. Let θ be the angle made by the swing jaw with the vertical at the moment when the jaws are widest open, or when the width of egress opening is y.

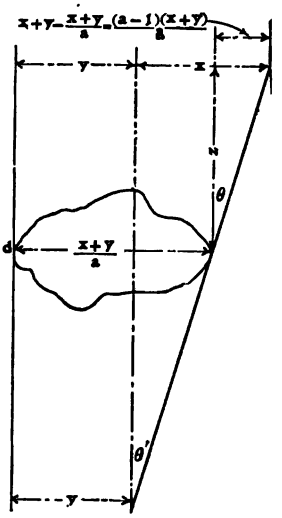

FIG. 76.

Then evidently the expression for the first drop z is $\frac{(x + y)(a - 1)}{a \tan \theta}$, z being derived from the expression $\tan \theta = \frac{(x + y)(a - 1)}{az}$, the relation readily seen from the diagram, Fig. 76. It will be evident that as θ diminishes z will become greater, and is infinity when θ is zero, or when the jaws are parallel. It will also be evident that z is a measure of the capacity of the crusher for the average velocity through the crusher is

$$\frac{z + \frac{z}{a} + ++ \frac{z}{a^n}}{1/p + 1/p + ++ 1/p}$$

In this formula p is the number of revolutions per minute made by the crusher and taking any number of terms sufficient to carry the ore through the crusher and comparing two crushers with different angles θ, all other figures being the same, the velocity for an equal number of terms will be greatest in the one having z the greatest, or in other words the crusher whose angle θ is least.

To fix the idea underlying the formula, let it be supposed that in crushing blocks of rock entering the crusher with a diameter $x + y$, that the first crush reduces them to half the entering diameter, or that $\frac{1}{a} = \frac{1}{2}$. Let it be assumed that the ingress opening is 12 in. and the maximum egress opening 2 in., and the depth of the jaws 30 in., then since tan θ is equal to $\frac{12-2}{30}$ or $\frac{1}{3}$, z may be written $\frac{(10+2)(2-1)}{2 \times 1/3}$ or the first stroke of the crusher drops the rock 18 in., and the fragments are 6-in. size. Now let it be assumed on the second stroke of the crusher that the reduction in size is to 3 in., then z/a becomes 9 in., or at the second stroke the pieces have fallen a total of 27 in. The third stroke will release the material from the crusher, since the reduction is to 1–1/2 in. while the egress opening is 2 in.

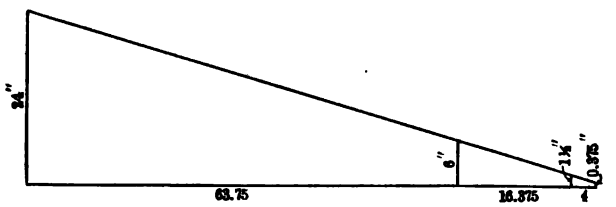

FIG. 77.

It will now be understood why the capacity of the Blake breaker decreases with size of rock to be crushed even when the ratio of crushing and the angle of the jaw of the breaker is the same for the different sized machines used. Reference to the diagram, Fig. 77, will make this point clear. The upper part of the figure represents a crusher with 24-in. opening and crushing to 6-in. (ratio 4); then if ratio of breaking is one-half each time in two strokes of the machine the ore will pass out, and consequently if the egress be compactly filled with rock, the capacity of the machine is measured by the maximum width of opening, or is proportional to 6, the width of the opening of the crusher at the bottom. The middle portion of the diagram represents crushing from 6 to 1–1/2 in., and as before in two strokes of the machine the ore will pass out, but the capacity cannot exceed an amount measured by 1–1/2. In the same way in the lowest portion of the diagram the expression for capacity cannot exceed a figure proportional to 0.375. Suppose it be attempted to crush from 24 in. to 0.375 in. in one operation, then it must be evident that the capacity of the single machine could not exceed that of three machines with dimensions equal to those of the diagram, and

such a single machine would be more expensive to manufacture than three separate ones. In either mode of crushing, using one or three machines, the cost of equipment for reducing to 0.375 in. would be greater than a combination of crushers and a machine of the medium class such as rolls, for the reason that the capacity of the roll far exceeds that of the crusher in its lower range of sizes.

In order to make the comparison complete, suppose it be attempted to make a crusher reducing from 24 in. to 0.375 in., but with an obtuse angle of the jaws so as to reduce the depth of jaws, and hence the total weight of metal required in the machine. It will be shown later that such a course would be impractical because the angle of nip would not be sufficiently acute to grip the pieces of rock entering the machine. Also the capacity is very much less than the capacity of the third machine where three are used in series, and a cheaper equipment per unit of capacity will result from using breakers in series, or a combination of rolls and breakers unless the capacity desired is very small.

The principal mechanical advantages of the Blake breaker have already been stated. Its disadvantages are, first, the parts are unbalanced and hence the machine requires heavy foundations and flywheels to absorb the vibration which results from its operation. In the Sturtevant crusher the pitman is counterbalanced by a counterweight in the rim of the flywheel and this is an excellent provision in design. In the Lake Superior region the pitman is suspended by a spring from an overhead support, thus relieving the crusher from a greater part of the power required for raising the pitman at each stroke. A second disadvantage in the Blake type of crusher arises from the concentration of work at the egress point of the jaws. It has been shown how the depth of fall from top to bottom of the jaws following successive reductions diminishes, consequently if the mouth of the crusher be only partially filled with large pieces of rock there will be a jam of material at the egress, and hence the crushing there will not be individual, as at the mouth of the breaker, and of the character called "free crushing," where single pieces fill the gap between jaws, but of the kind denominated "choke-feeding," where two or more single pieces are caught in line between the jaws. Since the forward and back motion of the swing jaw is greatest at the bottom where such crowding exists, the greatest wear would be expected on the crusher plates at the bottom, and such is the case. Over 90 per cent. of the wear on crusher plates is within a few inches of the bottom. Of the two plates fixed and swinging, the former of course receives the greater wear.

A third disadvantage of the Blake crusher lies in the liability of breakage of an important and expensive member, the pitman. Pieces of iron, such as hammer-heads and drills, which escape the crusherman or an electro-magnet, are apt to lodge in the breaker, causing the belt to throw, or breakage of the pitman at its narrowest point below the eccentric shaft. This is primarily due to the fact that in order to reduce the weight of metal in the machine,

the frame is made shallow, the frame bearings are set low and the pitman is in tension on the up or crushing movement of the pitman. Some continental crushers have been constructed with the toggles pointing upward, the pitman shank being in compression during the crushing movement. When the pitman is placed in this position it is more difficult to prevent the toggles from slipping from their seats. Of late years to prevent the breakage of the pitman some manufacturers have abandoned the use of cast-iron, substituting for it cast steel, or a foundry mixture of iron and steel, called semi-steel. The principal objection to this improvement lies in the difficulty of obtaining castings of this character at foundries contiguous to mining camps. Every mill man is familiar with cases where a spare pitman has broken a few hours after taking the place of another which had come to grief, entailing a lengthy shut-down until a new one could be cast in a local foundry. It is needless to say that such a situation could not be relieved by a factory 2,000 miles away.

Pieces of iron will often be lodged in crushers so as to resist ordinary measures for removing them. In such a case I have found the following procedure efficacious. The pitman will be found in some position of the up movement, or in very bad cases at the dead center at the top of the up movement. Fasten chain blocks to the ends of the spokes of the flywheel in such a way that on taking a pull the swing jaw will recede. An examination of the pitman will show which way to pull. At the same time if a chain can be placed around the obstacle, a pull should be taken on it, using a third chain block; this method will work well even when the obstacle has been mashed into the pits of a badly worn plate.

A final disadvantage of the Blake crusher lies in the difficulty of keeping the caps tight on the swing jaw bearings, due to unbalanced thrusts produced in the arc of rotation of the jaw, and to errors in design. The latter point will be plain if an imaginary line is considered as drawn from the center of the swing shaft to the lowest front point of the swing jaw crushing plate. If the edge of the crushing plate coincides with this line, there will be no upward or downward component of the crushing force. If the plate be inclined to this line so as to make the angle of nip more obtuse than that formed by the imaginary line and the vertical there will be a thrust on the cap of the swing jaw bearing. If the plate be inclined in the contra position so as to make the angle of nip less than formed by the imaginary line, then there will be a down acting component tending to keep the swing jaw in its bearings and causing more resistance by friction.

Angle of Nip.—The matter of maximum angle of nip is simple in its theoretical aspect, the very great uncertain factor being the angle of friction, which will vary with the individual ore, the shape of the pieces, their smoothness, and the condition of the jaws. The angle of friction is very low with hard rock, when sliding on a smooth, worn crusher plate. Different rocks have widely varying angles of friction when tested under the same conditions,

thus Trautwine gives the angle of friction for wrought iron on well dressed, soft limestone as 26 deg. 6 min., and for wrought iron on sawed marble only 99 deg. 39 min.

Where a fragment of rock is being crushed between two inclined surfaces the resultant of the pressures of the two surfaces or the resultant of the pressure of one surface and the reaction of the other will bisect the angle made by the surfaces. Where a fragment of rock is being crushed between two curved surfaces the resultant will bisect the angle formed by the tangents at the points of application of the pressures or the pressure and the reaction. It will be evident on a little reflection that when the half angle exceeds the angle of friction the fragment will slip.

A theoretical expression for capacity of Blake crushers per minute is given by $\frac{s(2c+s)w.(r.p.m.)W.}{2\tan\theta\ 1728}$. Where s is the stroke in inches measured at the egress; c the limiting size to which it is desired to crush, and a mean between the set in minimum and maximum position of the swing jaw; w the breadth of opening of the jaws in inches, W the weight per cubic foot of the broken ore. Referring to the diagram (Fig. 79), evidently at every stroke an amount of material of section A, B, C, D will fall out. Area of A, B, C, D equals $\left(c+\frac{s}{2}\right)\frac{s}{\tan\theta}$. The volume for one stroke is in cu. ft. $\frac{sw(2c+s)}{2\tan\theta\ 1728}$, and this times the weight per cubic foot, W, times revolutions per minute, gives the weight in pounds per minute. Applying the formula to specific and standard figures where θ equals 20 deg., c equals 1-1/2 in., s equals 3/4 in., tan θ equals 0.36 and w 24 in., the theoretical capacity per minute is 13 cu. ft., or approximately 30 tons an hour. For a working figure one-half of this value may be taken. It will be evident that the angle of the jaw, and other factors remaining unchanged, no increase of capacity will result from widening the opening at the top of the crusher, but, on the contrary, capacity will be lost. But increase of capacity will result directly as the breadth of jaw increases. As the commercial situation now exists, it is only possible to obtain necessary capacities in crushing by buying machines whose openings increase both as to width and breadth, and when it is considered that only rarely in underground mining does the minimum dimension of the largest piece of rock exceed 8 in., and that there is no difficulty whatever in placing the rock in the crusher with the minimum axis spanning the jaws, it will be evident that users of large crushers for mining purposes are paying for more metal and power than is necessary. For mining purposes there should be a series of crushers with

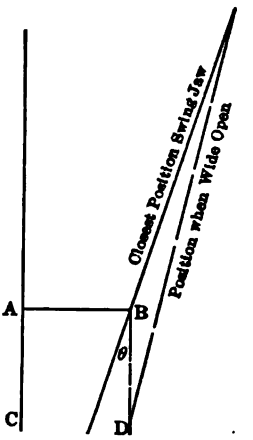

FIG. 79.

width of jaw opening ranging from 6 in. to 13 in., and with breadth of jaw opening from 10 in. to 60 in.

A handy rule for determining the horse power required for crushers is to take one-tenth the jaw opening and express it as horse power. For example, the power required to drive a 9 × 15 crusher is 13.5 h.p. since this is a tenth of 135. This rule will apply to all but mammoth crushers. The factors for computing horse power are the power required to run the machine empty; the

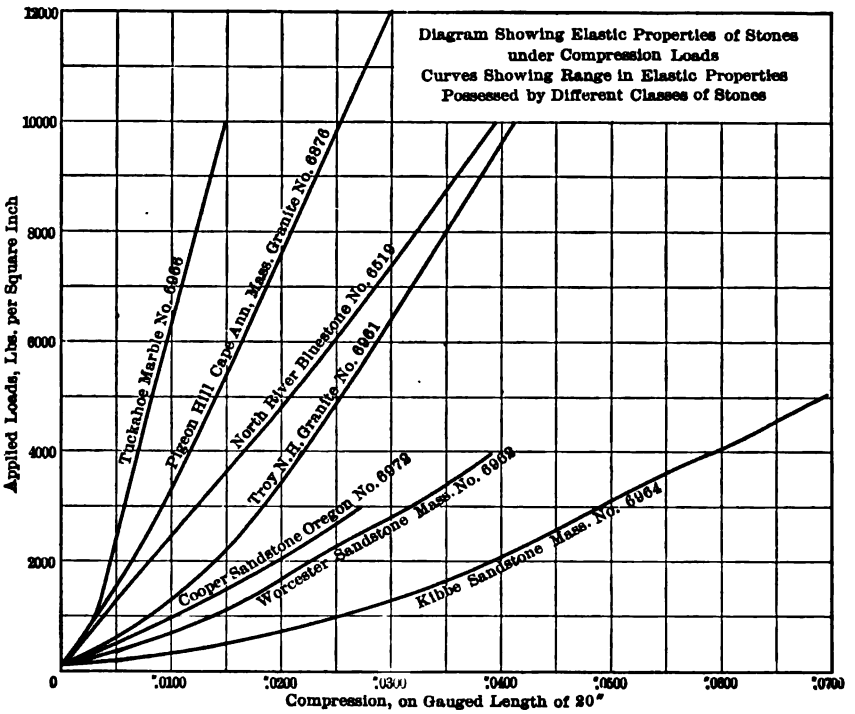

FIG. 80.

quantity and kind of ore being crushed, and lastly the limits of crushing. As to quantity crushed it is never safe to figure on less power than is required to crush the maximum capacity of the machine for any set. It will require more power to crush to a smaller set of the machine but at the same time less capacity will be obtained and these two factors offset one another. Hard ores require more pressure to crush them but the compression or strain is less than with more readily yielding rocks and ores and as the power consumed is as the product of the compression and the strain there are not great differences in the power required to break different ores and rocks. This is shown in the curves of compression and pressure for different rocks, Fig. 80. The power required to run the machine empty is a fraction of the power when

loaded to capacity. From my experience I judge that 20 per cent. of the maximum power consumption will run this type of machine empty.

Crusher Feeding.—The common sense principle underlying crusher feeding is not well understood. It will have been gathered from the preceding pages that the inlet to the crusher cannot be kept continuously full of coarse rock without jamming at the egress. Even under the best arrangements for thorough mixing the feed is variable as to size; the rate at which it must be fed must vary from moment to moment, large pieces succeed fine, and the large must be fed slower than the fine. It is hardly possible to dispense with the constant attendance of a crusherman unless the size of the machine be much greater than necessary, and so far the manufacturers have failed to provide machines economically designed to this end, that is, machines of proper ratio of breadth to width of opening. Lubrication troubles also require more or less constant attendance.

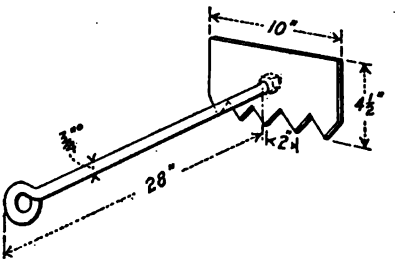

FIG. 81.

The common way of feeding crushers of small or medium size is by hand, aided more or less by gravity flow. A gate is provided back of the crusher so that the flow can be cut off entirely when the machine is not in operation. The crusher man is provided with a rake to assist in handling the ore. Fig. 81 shows good average dimensions for one of these devices. The rake is used either to stay the flow of ore or to assist in dragging it along. It has been found that a feed chute placed at such an angle that the ore will flow freely, is far more fatiguing to the crusherman than where the chute is flat, and all the ore has to be dragged into the crusher. An angle of about 26 deg. with the horizontal makes the best conditions of slope, or 1-ft. rise for every 2 ft. horizontal length of chute. But even under the best conditions of hand feeding, or the better term, hand control, the amount of physical labor involved for an 8-hour shift and moderate tonnages is enormous. It is a well known fact that the crusherman's work is the most severe of any class of labor in the mill. From my experience I am convinced that 12 tons per hour, of material coarser than 1–1/2 in., is the maximum which the crusherman can feed; or, at any rate, all that should be expected of an able-bodied man. Consequently, for even moderate tonnages, as tonnages go in these days of large equipments, some form of mechanical feeder must be adopted. Since such devices as are usually installed have no means of regulating the rate of feeding, the crusher is apt to become jammed and the belt thrown. The most efficient device for mechanical feeding is a short endless belt made up of steel pans fastened to roller chains passing around sprocket wheels. There is no vibration from this device as there is with pan or plunger feeders, and little or no loss in head room. The feeder must be set under the bin,

the latter being provided with a rack and pinion gate for entirely shutting off the stream of ore. To avoid having the whole bin pressure on the feeder it must be placed below the bin opening and arranged with side boards placed up to the bin to prevent spillage, the ore being allowed to flow out on a conveyer until it takes its natural slope. The conveyer should never be allowed to pass through any portion of the bin. To secure control of the speed of the conveyer various speed control devices may be used, the most perfect and positive one being the Williams-Janney variable speed transmission; the only objection to its use is the high cost. A friction variable speed trans-

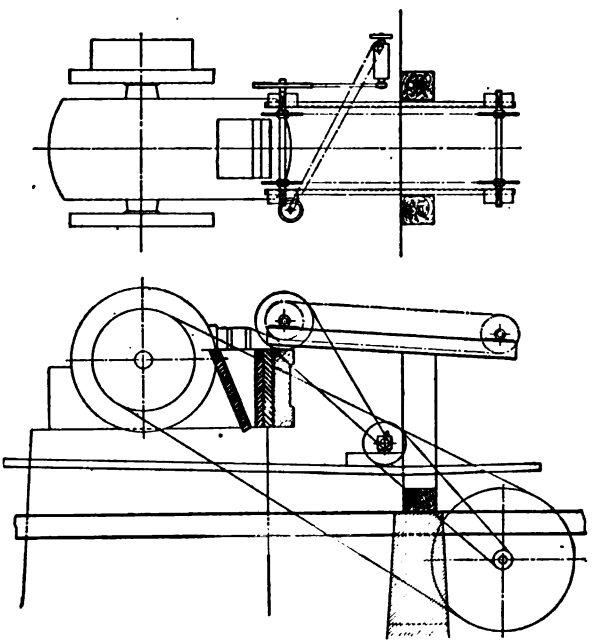

FIG. 82.

mission may be used, but this has the objection that high speeds and pressures are required to obtain any power, and reduction in speed to that of the conveyer has to be made by worm gearing or other form of gearing. Ratchet devices are also used, but the control is not as good or positive as with the other devices mentioned, but it has the merit of being cheaper. An arrangement of the Williams-Janney transmission is shown in Fig. 82. All these devices of course require an attendant.

Most Blake breakers are provided with oilways, and in specifying a crusher of this kind removal of the oilway should be asked for, grease cups of ample size being substituted in their place for the pitman, frame bearings and swing jaw bearings. Heavy oil must be sparingly used on the toggle seats.

Crusher troubles may be largely avoided by good foundations and uniform feeding, to maintain constant power consumption and by care in adjusting the gib, the crescent-shaped piece of bearing metal which is supposed to prevent the pitman from rising from the shaft on the down stroke. In many cases the pitman will not pound if the gib is entirely removed, and a trial should be made running in this way. In case the gib is necessary it should only be tightened to a very slight pressure on the eccentric shaft, just sufficient to prevent the tightening wedges from rattling. "Burning up" of the pitman, that is, heating sufficient to melt the anti-friction metal, is not an infrequent occurrence in crushing plants, and in common with all crushing machines the wear on the anti-friction metal is rapid.

In case both pitman and frame bearings need rebabbiting at the same time the procedure may be as follows: Remove flywheels, raise the pitman and shaft, block pitman, remove gib and shaft, then clean old babbitt from frame bearings and pitman. Replace shaft and align both shaft and pitman, leaving about 1/2 in. clear space between pitman and eccentric portion of shaft and between shaft and lower portion of frame bearings. Close ends of bearings with clay and the half upper circle of the pitman and pour babbitt. The caps and gib can be cast with wooden mandrils as cores. After the babbitt has chilled, the shaft can be removed and the grease grooves cut. When the crusher is reassembled liners can be placed between the caps and lower half of the frame bearings and these being removed successively as the babbitt wears out.

Jaw Plates.—The choice of metal for jaw plates depends entirely upon the character of the rock. It may be laid down as a general principle that the more resistant the rock the higher the type of metal that must be employed. Homogeneous strongly bonded rocks consisting of abrasive mineral, such as quartz and well represented by granite, yields suddenly and with violence. These require a high grade of steel because the abrasive effect is great, and also because great pressure is required to break it. A very difficult rock to crush is a fine-grained trap, not only containing much abrasive material but requiring great pressure to crush, and at the same time yielding to a comparatively great degree before rupturing. Probably the most difficult material with which the breaker has to contend is rhodonite, often occurring in relatively large masses in ore deposits. This mineral is very tough; that is, it compresses very much before rupturing, and at the same time has a high breaking strength.

The three principal crusher plate materials are chilled iron, cast manganese steel and forged chrome steel. Chilled iron, as the name indicates, is cast in a metal mould and the sudden chilling due to this mode of casting causes a skin of hardened iron to form on the crushing face. Manganese steel is frequently used for crusher plates, being always in the cast form owing to the difficulties attending the forging and machining of this material. For service where great resistance to abrasion, coupled with toughness or lack of

brittleness, manganese steel is desirable as the crushing metal, and gives admirable service. It is manufactured by what is known as the Hadfield process, and is an alloy of manganese and steel containing from 6 to 20 per cent. of the former. When these alloys are heated to a high temperature and are suddenly quenched, they become very tough, and also retain the great hardness due to the admixture of manganese. Chrome steel, while harder than manganese, is far more brittle in the cast form. The various portions of a casting seem to be under stress, due to unequal rates of contraction

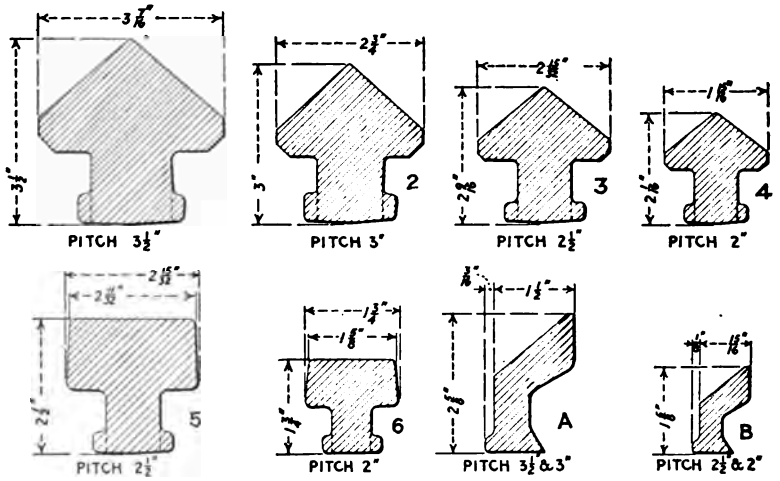

FIG. 83.

and cooling. Some years ago I tried some cast steel chrome crusher plates, which under a few hours' service were completely disintegrated, portions of the faces of the plates becoming loosened from the back in pieces as large as the double palms, and with explosive violence. On forging, however, chrome steel becomes quite tough without losing its hardness. Chrome steel forges as readily as low carbon steel. The valuable properties of forged chrome steel are well utilized in the Canda Chrome Steel crusher plates. In the construction of these plates forged chrome bars of the sections shown in Fig. 83 have cast about them tough open-hearth steel. The bars are tempered after this operation and obtain great hardness. The life of these plates on hard ores is remarkable. Records of three years' life on the hard ores from the Cripple Creek district have been obtained. The standard spacings for the corrugations in the Canda crusher plates is also shown on Fig. 83. The 2-in. pitch would be used on 7 × 10 in. crushers, the 2 1/2-in. and 3-in. on 9 × 15, and 10 × 20 crushers, and the largest pitch on sizes greater than this. The bars *A* and *B* are used for the edges, 5 and 6 for

flat plates. The object of corrugations on the bars is to allow of breaking rock by a centrally loaded beam breaking effect, as will be evident from an inspection of Fig. 84. The larger the rock the greater the pitch of the bars necessary to obtain this effect.

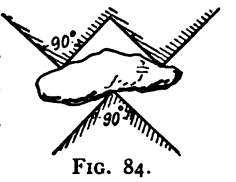

FIG. 84.

Crusher Springs.—Coiled springs of round spring steel are better for crushers than the usual rubber springs supplied, since the latter speedily become devulcanized under repeated flexure. A coiled spring of 1/2-in. rod, coiled into 10 or 11 coils of 1-in. pitch, and having an outside diameter of 4 in., will serve for small and medium sized crushers. The compression of a new rubber spring is not proportional to

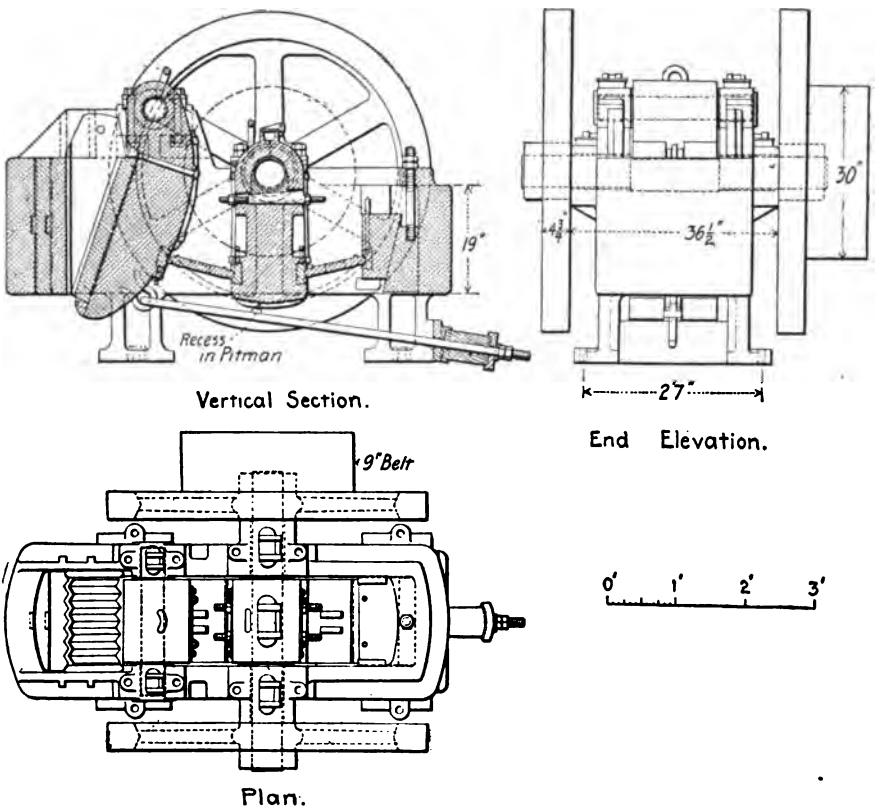

FIG. 85

the load put upon it, as with coiled springs, a point that can be plainly seen from tests made at the Watertown Arsenal in 1884, on gun carriage springs identical with rubber crusher springs. The old rubber springs used in these tests were particularly incompressible, and deeply mashed to an

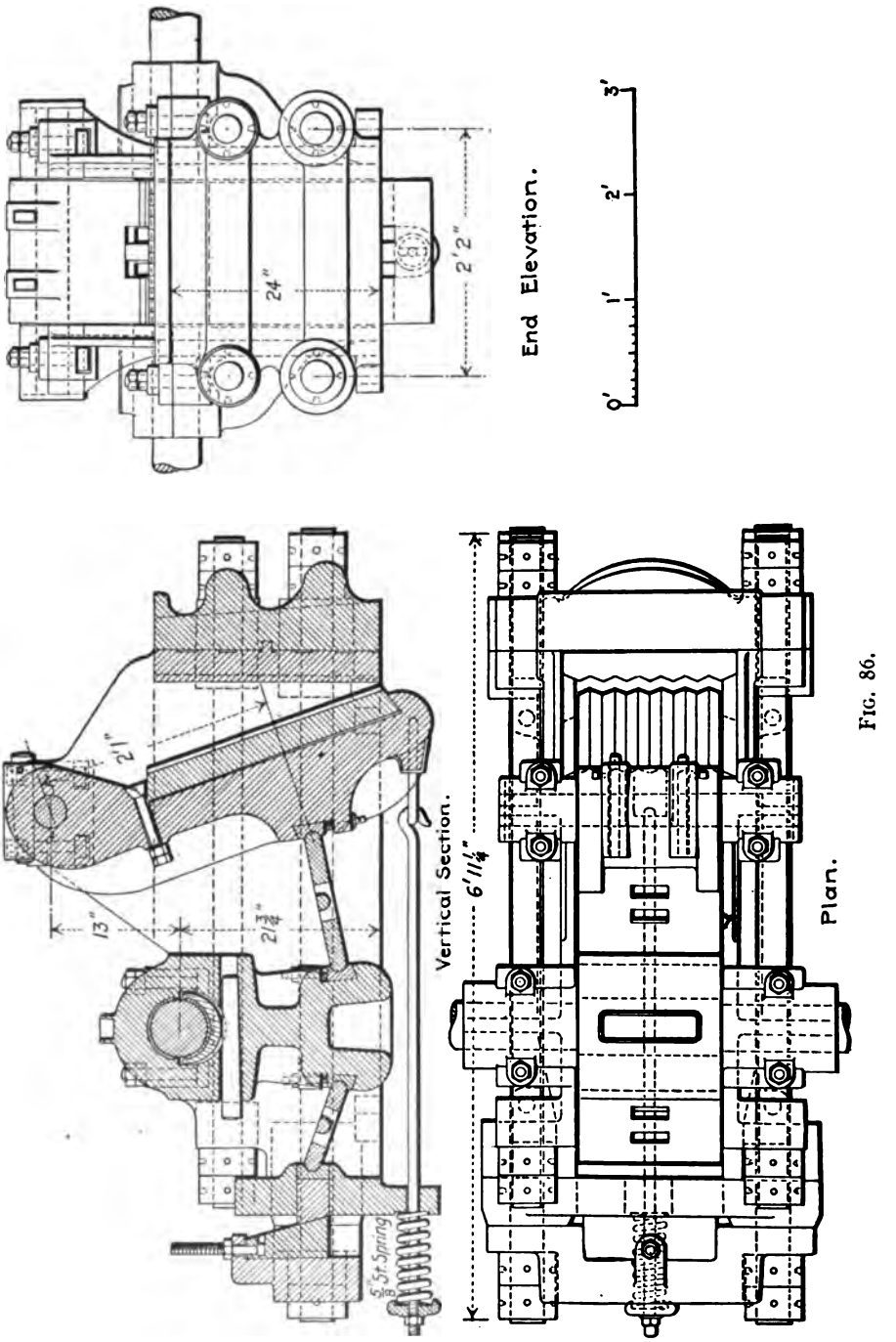
24"
2'2"
End Elevation.
0'
1'
2'
3'
2'1"
13"
2¼"
5 Sr Spring
Vertical Section.
6'11¼"
Plan.

FIG. 86.

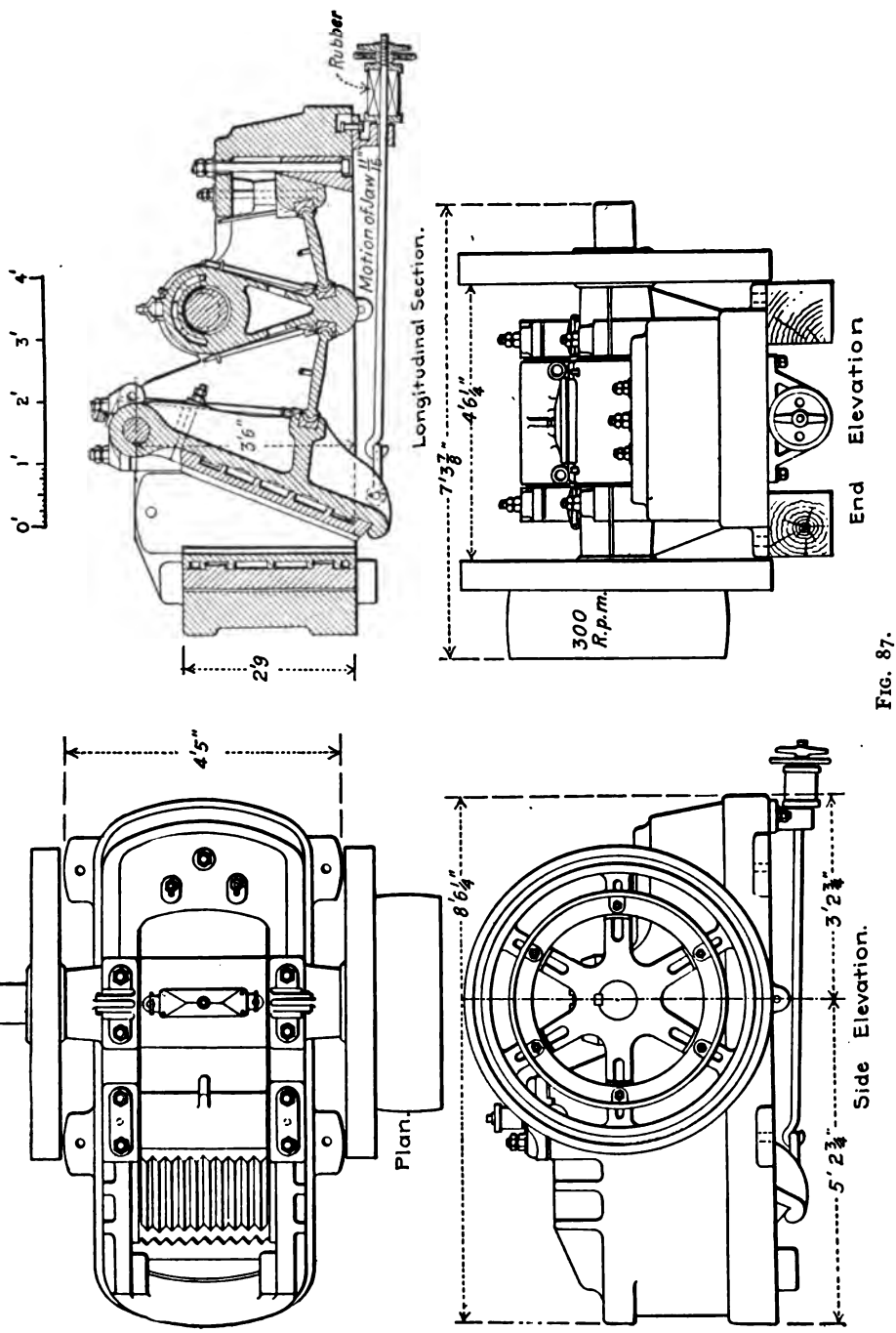
Rubber
Motion of Jaw
0' 1' 2' 3' 4'
36"
29
Longitudinal Section.
7'3⅞"
4'6¼"
300 R.p.m.
End Elevation
4'5"
Plan.
8'6¼"
3'2¾"
5'2¾"
Side Elevation.

FIG. 87.

unrecoverable set. For the larger size crushers the diameter of the rod may be increased up to a maximum of 3/4 in., and with a diameter of spring equal to that of the inside of the circular bearing plate furnished with the crusher. The weight of a coiled spring governs problems of this kind, and this should be proportioned to the size of the crusher, or more particularly to the weight of the swing jaw. Fig. 85 shows the ordinary type of all cast-iron crusher, of 9 × 15 opening. Fig. 86 shows the same size crusher with longitudinal rods to give greater strength. Fig. 87 is a crusher with semi steel pitman and without legs, the type which is most favored today. This crusher is provided with means for cooling the pitman, a refinement in practice which merits more attention than it has received. The size of opening of this machine is 13 × 24. The usual sizes of small and medium Blake machines are: 7 × 10, 9 × 15, 10 × 16 or 10 × 20, 12 × 20, 13 × 24, 15 × 24, 30 × 13, 30 × 15, 30 × 18 and upwards.

Gates Crusher.—The Gates breaker followed the Blake crusher. The development of this machine has been in mechanical details, there being little change in the general appearance since the date of the original patent. From a theoretical point of view the application of the crushing force is not as good as in the Blake machine, but, on the other hand, it is better balanced, and this point would be far more in evidence were it not that the crushing zone is at such a considerable height above the foundation. The necessity for arranging the parts of the machine so as to bring the crushing area high, will be evident from the following consideration:

The inclined spout leading the crushed rock away must be clear of the driving gear, and to allow of this the spindle shaft must be carried a comparatively great distance below the crushing head. Even under these conditions the protection of the gearing from grit is not perfect, since grit can work past the fixed collar 40 (see section McCully Breaker, Fig. 88) and down onto the gearing below and from this point into the eccentric. In the Blake machine there are no bearings below the discharge point of the jaws. The gyratory crusher is no freer from lubrication troubles than any other coarse breaker; indeed, a little reflection will show that overheating is more to be expected in the gyratory than the Blake.

Referring to Fig. 89 let x be the distance measured along the axial line of the spindle shaft from the fulcrum point O to the horizontal line passing through the resultant of the crushing pressure; P and y the distance from the horizontal line to the line passing through the eccentric bearing, and with resultant pressure at this point of P'; then $P' = \frac{Px}{x + y}$; the greater the value of y or the greater the length of spindle shaft below the crushing area, the less will be the pressure in the eccentric bearing, and therefore less heating and lubrication trouble. It will be evident further that although the pressure in the eccentric bearing is decreased

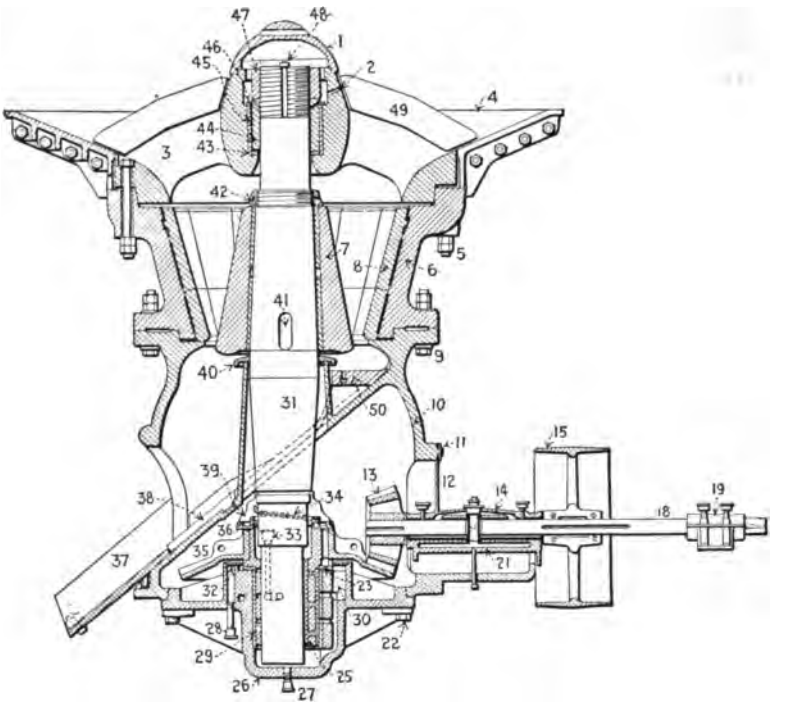

FIG. 88.

TABLES OF DIMENSIONS, WEIGHTS, CAPACITIES AND POWER REQUIRED

Size of crusher	Size of each feed opening	Finest setting		Coarsest setting		Size of driving pulley	Revolutions per minute	Horsepower of engine required	Weight of crusher, pounds
		Smallest size of product	Capacity in tons 2000 lb. per hour	Largest size of product	Capacity in tons 2000 lb. per hour				
No.	Inches	Inches	Tons	Inches	Tons				Pounds
1	5 × 20	7/8	4.5	1-7/8	8.5	18 × 6	600	4- 6	7,000
2	6 × 25	1	6.5	2-1/4	12.5	20 × 8	575	6- 10	10,200
3	7 × 28	1-1/4	11.0	2-3/4	25.0	22 × 10	525	10- 15	17,000
4	8 × 34	1-1/2	20.0	3-1/2	48.0	28 × 12	475	12- 20	23,000
5	10 × 40	1-3/4	30.0	4-1/4	75.0	30 × 14	450	20- 25	36,500
6	12 × 44	2	50.0	4-1/2	120.0	34 × 16	425	25- 40	48,000
7-1/2	15 × 55	2-1/2	80.0	5	180.0	40 × 18	400	45- 70	71,500
8	18 × 68	2-3/4	110.0	5-1/2	250.0	44 × 20	375	65-100	100,000
9	21 × 76	3	160.0	6	350.0	52 × 20	350	100-140	160,000
10	24 × 84	3-1/2	210.0	6-1/2	450.0	52 × 24	350	115-160	170,000
11	27 × 92	4	260.0	7	550.0	52 × 24	350	130-180	180,000
Mammoth	36 × 130	5	600.0	8	1100.0	66 × 31	300	200-250	405,000
Mammoth	42 × 136	5-1/2	700.0	9	1300.0	66 × 33	300	225-280	425,000

by long leverage it increases directly as the resistance of crushing increases; whereas in the Blake crusher as the resistance of crushing increases the pressure in the pitman journal will tend to decrease. For these reasons, lubrica-

tion troubles in gyratory crushers are greater and more continuous than those of the Blake style of breaker.

In the matter of maximum size rock which the two types of machine will seize, it must be evident that the gyratory must be much larger and heavier machines than the Blake for equally effective openings in this respect. This will be clear by reference to the diagram, Fig. 90, in which a 13 × 24 in. rectangle has been laid down to scale between the two circles of a gyratory crusher, the inner representing the top circle of the crushing head and the outer the inner circle of the concave; the two circles are shown at their

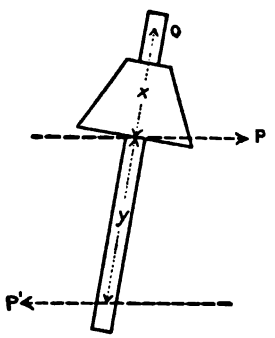

FIG. 89.

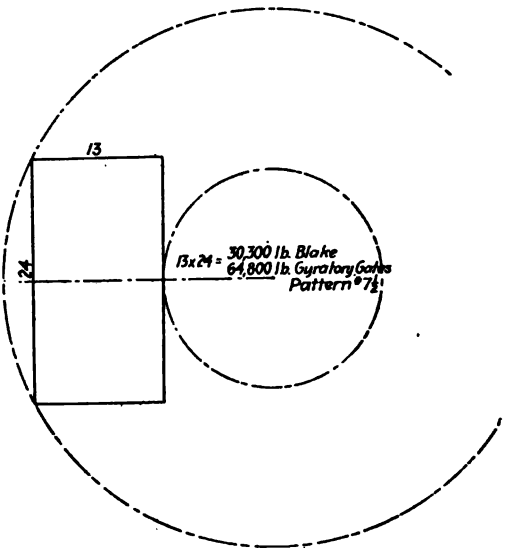

FIG. 90.

TABLE OF LARGE JAW CRUSHERS CONSTRUCTED OF CAST STEEL THROUGHOUT[1]

Size of opening, in.	Capacity in tons per hour, in.	H.p.	Pulley, in.	R.p.m.	Weight
60 × 30	115 to 3	135	72 × 21	200	180,000
72 × 30	135 to 3	150	78 × 21	200	210,000
42 × 36	100 to 4	110	54 × 22	200	170,000
48 × 36	115 to 4	135	54 × 24	200	200,000
60 × 36	200 to 5	140	72 × 22	200	220,000
48 × 42	200 to 6	140	66 × 24	175	210,000
60 × 42	250 to 6	150	72 × 24	175	230,000
60 × 48	325 to 7	175	72 × 26	150	260,000
84 × 60	600 to 8	250	132 × 36	90	450,000

proper relative distance from one another for any size gyratory. To seize a 13 × 24 in. piece of rock or ore a gyratory crusher weighing 65,000 pounds would be required, taking average dimensions of machines manufactured by three of the principal manufacturers and just capable of taking this size of

[1] A drawing of the largest size of these crushers is shown by Fig. 94.

rock. Now a Blake crusher of 13 × 24 in. opening weighs approximately 30,500 lb. The capacity of the gyratory machine is of course greater than the Blake, though the same theoretical considerations governing capacity which have already been stated for the Blake, apply to the gyratory. This will be clear on referring to Fig. 91. The little figure *A* enclosed by the dotted lines is one of the factors of capacity, the others being the area of the annular space between the concave and a circle described by a point on the edge of the head opposite the crushing point, and finally the rate of rotation.

It has been said that the Blake crusher is wasteful of power because it does no useful work while the swing jaw is receding. This seems to be a valid criticism for although a certain amount of energy is stored up in the heavy flywheels of the Blake-machine, yet since the strokes are so close together this energy is not so effective as it would be if the periods of useful work were farther apart, as they are, for example, in a punching machine. There seems no doubt that for equal capacities and

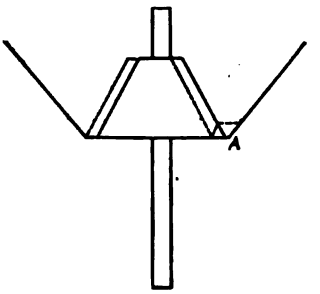

FIG. 91.

SIZES AND CAPACITIES OF SUPERIOR JAW CRUSHERS[1]

Size	Approximate capacity in tons per hour to size stated			Extreme dimensions			Size of pulley	No. of rev.	H.p. required	Total weight	Wt. of heaviest piece
	Tons in.	Tons in.	Tons in.	Lgth., ft. in.	Width ft. in.	Height ft. in.	In.				
36 × 24	130 6	90 4	70 3	13 4	8 7-1/2	7 1	Pulleys	250	60– 80	68,000	26,500
42 × 40	225 8	170 6	130 4-1/2	16 1	10 3-1/2	9 6	to suit	250	80–120	130,000	64,000
60 × 48	290 9	240 7	180 5	17 1	13 0	10 6	condi-	200	90–200	205,000	55,000
84 × 60	450 11	370 9	280 7	16 11	16 0	15 10	tions	100	100–250	400,000	53,000

like reductions less power is required for the gyratory than the Blake, but there have never been any thorough comparative tests made which will enable a definite statement to be made on this point. It is possible that on certain classes of ore or rock one machine is superior to the other. An additional point in favor of the gyratory using less power, lies in a somewhat superior mode of breaking the large pieces of rock, comparable to breaking a beam by a central breaking load. Near the discharge point this favorable action is not obtained, the pieces being broken by direct pressure. In the Blake machine with the corrugated jaw plates, breaking by beam action becomes more effective toward the discharge point, and to a certain extent offsets the more favorable conditions in the upper part of the gyratory.

Advantages of Gyratory Crushers.—The advantages of the gyratory may be stated as follows:

(1) Average length of ring opening increases much faster from size to size in proportion to the width than does the breadth of jaw opening in the standard sizes of the Blake crusher; consequently the gyratory can be more

[1] The largest size of these Crushers is shown in perspective by Fig. 93.

economically selected for large capacities for mine work, much of the jaw opening in the large sized Blake machines being wasted.

(2) The gyratory can be fed by flooding; when so fed no feeder is required, the ore flowing from the gates directly into the hopper and assuming its natural slope. The rate of discharge from the gate being the capacity of the crusher.

(3) The gyratory can be fed from any number of directions, making its use convenient for feeding from a number of radiating chutes, or by cars with tracks radiating in a number of directions. Where ore is gathered in this way for feeding a Blake Crusher, a bin, or pocket, would be required, causing loss of head room, and an attendant would be necessary; for a large capacity a mechanical feeding device is necessary; the opening of this machine is too nearly equal to the size of the largest lump thus permitting arching and choking, and an attendant is required to direct the lumps into the crusher. Of course if the means of gathering mentioned are intermittent in point of time, a bin must also be provided for the gyratory crusher.

(4) The more favorable consumption of power has been mentioned.

(5) Owing to large capacity a single machine will do the work of a number of Blakes of size economical for mine work. One attendant will be required for the gyratory at the most, whereas, for the Blakes an attendant for each machine can scarcely be avoided. For sizes giving approximately equal capacity the head room measured from spout to spout is greater in the case of the gyratory than the Blake. For an equipment of a number of Blakes fed from a central point, such as the distributing hopper at the end of a sorting belt, the total head room required for these machines may be much greater than for a single gyratory. For a battery of Blake crushers mounted at the same level, and on the same foundation line, and fed through gates spaced at regular intervals in a long bin, and all discharging on to a horizontal belt below, the advantage of head room would be with the Blakes as against the single gyratory, but if all the crushed material from the Blakes had to be spouted by individual spouts to one central spout, neither would have much advantage in point of head room.

(6) The product delivered by the gyratory is more uniform than that from the Blake.

Disadvantages of the Gyratory Crusher.—The disadvantages of the gyratory are:

(1) It cannot be used with sticky ores because the recession of the head is neither so great nor so sharp as the swing jaw of the Blake. Sticky ores invariably jam the gyratory crusher.

(2) The crushed ore leaves the gyratory in an arbitrary direction parallel with the pinion shaft, or at right angles to it, which does not provide sufficient flexibility for disposing of the crushed material. The crushed material leaving the Blake can be taken away at any angle.

(3) The gyratory has the more unfavorable nipping conditions and it is

common to see large rocks dancing in the gyratory which are immediately nipped in the Blake. This trouble largely disappears with flood feeding.

(4) The gyratory has very little range of adjustment for taking up wear. With the Blake crusher, the greatest intensity of wear is at or near the discharge point. When the crushing surfaces of the gyratory have been flattened by wear the raising of the head to reduce the set is of no avail.

(5) The greatest disadvantage under which the machine labors, and it is a very great one, is the amount of time required for making even simple repairs. This is due to the great weight of the individual parts, their complexity of detail, and inaccessibility where the parts are joined. A large force of skilled labor is required for giving a gyratory the periodical overhauling necessary. A familiar example of the difference in point of simplicity of repairs between the Blake and the gyratory lies in the change of the breaking faces. In one case, practically the only operation is lifting up a worn plate and dropping in a new one in its place. The removal of the head of a gyratory crusher entails taking off the hopper, removing the heavy spindle shaft and head, driving off the latter, replacement of old head by new, and zincing the new to place. The setting of new concaves is even more arduous than setting new heads. An elaborate treatise for setting and operating gyratory crushers usually accompanies them. The eccentric must be rebabbitted or replaced from time to time. In order to do this, the bottom plate is lowered by turning nuts on four long-threaded bolts provided for this purpose, which with the reverse operation of returning the plate to position consumes much time and labor. On certain gyratories the gear wheel is riveted to the eccentric, and to change the latter the rivets must be struck and a new eccentric riveted to the gear wheel. These statements of time required and the difficulty of repairing gyratories touch upon the subject very lightly. Indeed, I am of the opinion that these machines should not be purchased unless there is a good shop equipment, and a skilled repair crew thoroughly familiar with their construction. The mill foreman who goes after crusher troubles, only when their cause is glaringly apparent, should not be entrusted with the care of gyratory machines, for only the very experienced know when their troubles have reached a stage needing immediate attention.

(6) The foundation for a gyratory cannot be made of a solid mass of masonry, a form best suited to absorb vibration. Owing to the necessity of lowering the bottom plate, an open space must be provided below the crusher, and the foundation resolves itself into two parallel walls, or two parallel sets of frame timbers, as indicated in Fig. 92. This does not provide sufficient mass for shock absorption.

(7) The gyratory must have hard liners or wearing plates to protect the frame from injury, and these add to the cost of up-keep of the machine.

(8) The crushed ore, particularly if damp, and if the upper wearing plates

are badly pitted by wear, will tend to lodge in the upper part of the machine, stopping crushing in a portion of the crushing circle.

Choice of Blake or Gyratory.—On the question of choice between the purchase of Blakes or gyratories, a certain amount of guidance may be given. Where the rate of feeding does not exceed 800 tons of run-of-mine ore, per day of 24 hours, to be crushed to the limit of nip of medium-sized rolls, then a single Blake crusher, up to a maximum of size of 13 × 24 in., should be employed. The tonnage actually crushed by the machine, that is the plus 1–1/2-in. material, will be between 400 and 500 tons. The reason for the choice of the Blake under these conditions will be evident, from what has already been stated: less cost for equipment; less time lost for repairs; less cost of repairs, including fewer and less skilled laborers; and less head room, etc. A 13 × 24-in. Blake is the limit of economical size for mills receiving ore from underground operation. Indeed, this size of machine has a limit of crushing rather at 2 in. than 1–1/2 in., the angle of nip, and the angle which the toggles make with the jaw, being unfavorable for crushing to 1–1/2 in. for this size of machine. I cannot but again express the regret that there is not a range of Blake machines with 10 in. width of opening, and with breadth of opening up to 36 in. and higher. Such machines could be designed to advantageously crush to 1–1/2 in., and would reach capacities far in excess of that given as the limit of crushing with a single Blake machine, and they would solve many vexatious problems, which confront the metallurgist in designing medium sized crushing plants.

For capacities above the maximum given, the choice between a number of Blakes and a single gyratory will depend somewhat upon the exigencies of site. As a rule, the gyratory will have the choice for large equipment, owing to savings in power and attendant's labor. Thus, if it be desired to crush 3000 tons per day of run-of-mine ore, or 1800 tons above 1–1/2 in. size, say 1500 tons above 2 in. and 1200 tons above 3 in., then 5 Blake machines 13×24 in. would be required, or eight 10×20 in., which would be the better size for 1–1/2 in. crushing. For the same service a No. 6 gyratory would be required, but this machine would be incapable of crushing finer than 2 in. With the Blakes, there would have to be five to eight attendants, while not more than one would be necessary with a gyratory. The greater operating labor expense would be offset to some extent by the larger and more skilled repair crew required for the gyratory. The product from the Blake crushers could be fed to medium sized rolls, while that from the gyratory would have to pass first to large rolls or secondary crushers. The cost for crusher equipment would be for Blakes three or four times that of a single gyratory, but this would be offset to some extent by there being a simpler arrangement for disposing of the crushed product below the Blake crushers, and greater certainty of more continuous operation, that is, greater freedom from entire shut down of the crushing plant.

Reduction in costs in quarrying operations in late years has resulted from

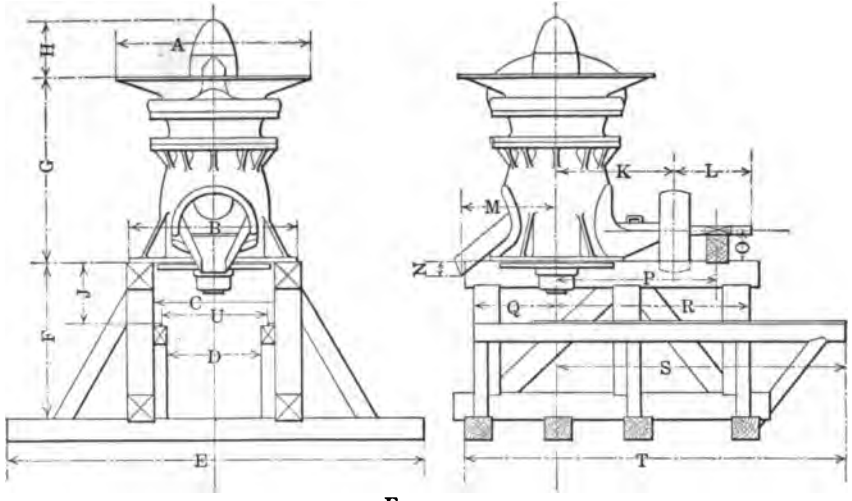

FIG. 92.

No.	A	B	C	D	E	F	G	H	J	K	L	M	N	O	P	Q	R	S	T	U	Pulley	Revs. per min.
	ft. in.	ft. in.	ft. in.	ft. in.	ft. in.	ft. in.	ft. in.	ft. in.	ft. in.	ft. in.	ft. in.	ft. in.	in.	in.	ft. in.	ft. in.	ft. in.	ft. in.	ft. in.	ft. in.	in. in.	
4	6–8	5–9	4–0	3– 0	14–0	5–3	6–0	2– 2⅜	23½	4–2 1⅛	2– 7⅜	2–11½	5½	12	5– 9½	2– 9	6– 9	9–11	13–2	3–6	32 × 12	400
5	7–6	6–6	4–8	3– 8	16–0	5–9	7–0⅛	2– 4⅛	2–4	4–6⅛	2– 8⅛	3– 6½	6½	14⅛	6– 1½	3– 2	7– 3	10–10	14–4	4–2	36 × 14	375
6	8–7	7–4	5–6	4– 6	16–0	6–3	8–1½	3– 0½	2–6½	4–10¾	2–10¾	3– 9½	7⅛	15⅛	6– 7½	3– 6	7–10	12– 0	16–0	5–0	40 × 16	350
7½	10–8	7–8½	6–2	4–10	18–0	6–9	8–7½	2–11⅛	2–9	5–6½	3– 1⅞	4– 4	10½	15½	7– 4	3–11	8– 9	13– 1	17–4	5–0	44 × 19	350
8	12–4	9–0	6–8	5– 4	18–0	7–3	10–5½	3– 6½	3–3	5–9⅛	3– 6½	4– 6	7	16½	7–11	4– 5	9– 4	14– 3	19–0	5–6	48 × 20	350

NOTE.—In all cases get special plan for foundation. The dimensions given on this page are only intended as a preliminary guide.

breaking large masses of rock and transporting them to mammoth crushers. For such service the Blake crusher must command the field, for here the great factor of choice is the ratio of the weight of the machine to the largest single piece it will crush. The largest size Blake which has been built for this service is 60×84 in., and weighing 200 tons. By referring to the Fig. 90 on page 190, it will be recognized that a gyratory to seize this size block would have to be of such stupendous dimensions, that its cost and maintenance would be out of reason. For surface mining and milling operations on a large scale, these mammoth machines are worthy of the attention of the metallurgist. Fig. 93 shows a 60 × 84 machine, and Fig. 94 shows a section of a 60 × 84

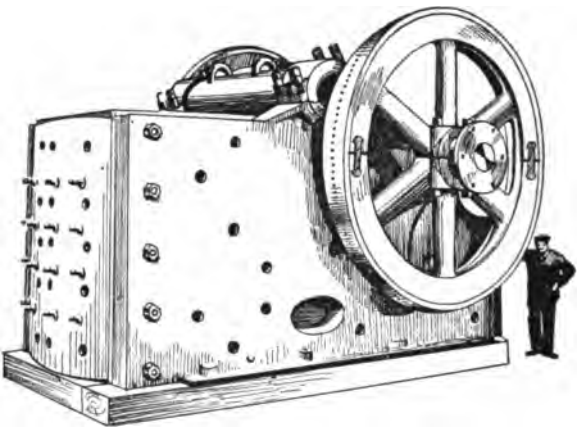

FIG. 93.

machine made by another manufacturer. Below each drawing is given a tabulation of data concerning mammoth crushers, furnished by the manufacturer.

The principal developments in gyratory crushers has been the universal adoption among American manufacturers of the two-arm high spider, which materially reduces the impedence to the flow of ore which was offered by the old three-arm spider. Practically all the American manufacturers now suspend the spindle shaft from the spider, and take up the wear at this point. It must be evident that since the surface of the crushing head is not parallel to the axis of the spindle shaft, there must be a downward thrust exerted by the latter. In the old designs, where the spindle shaft was supported by the eccentric at the bottom, this component created an additional pressure on the bottom of the eccentric. A steel step was interposed between the end of the spindle shaft and the bottom of the eccentric. This arrangement will be clear by reference to Fig. 95. With a spindle shaft suspended from the fulcrum point in the spider, the friction is much less, being largely rolling in character. The differences in the designs of the various manufacturers are only as to detail, many such differing details being only "selling points."

In some designs the spider is removable separately from the hopper. There are variations in holding the head in place and variations in the head itself, some makers providing, if desired, a thin conical piece called a mantle, which

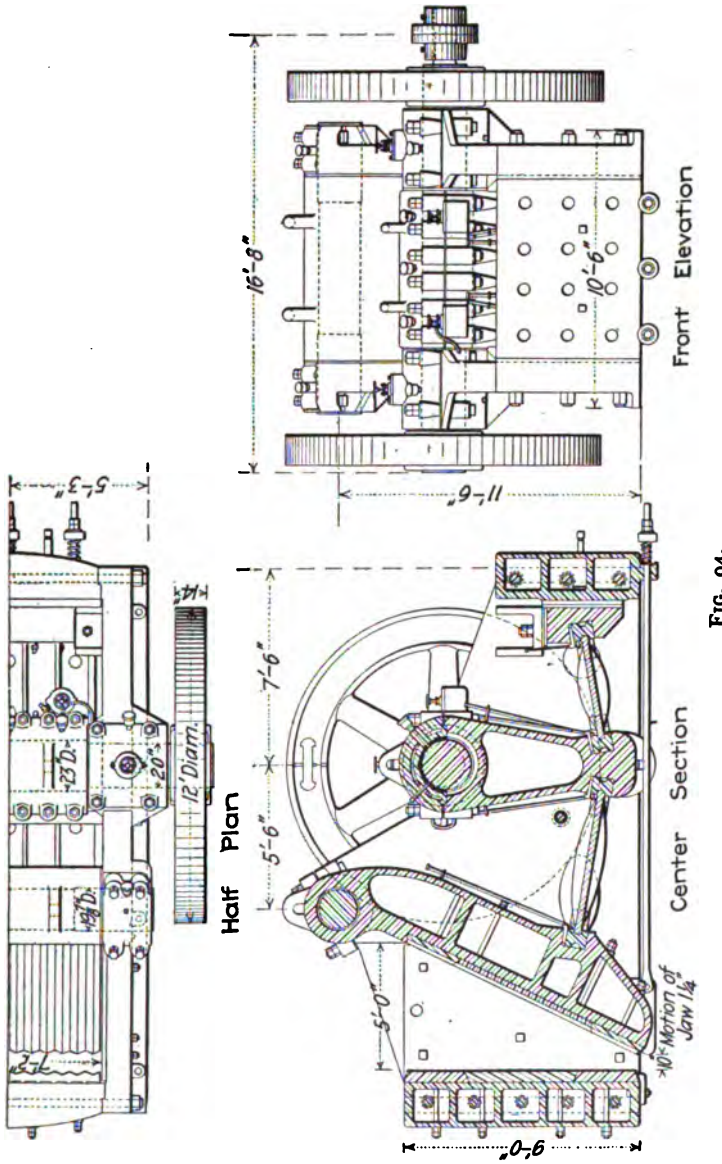

FIG. 94.

is slipped over the head proper, this being considered to be a particularly desirable combination, where an expensive special steel is used as a crushing metal, as there will be less scrap material. There are variations in the modes

of securing the gear wheel to the eccentric. In some machines they are riveted together, in others they are secured to one another by bolting or keying. There are differences in the mode of suspension, each of which is claimed by the maker as superior to the others, but these differences are im-

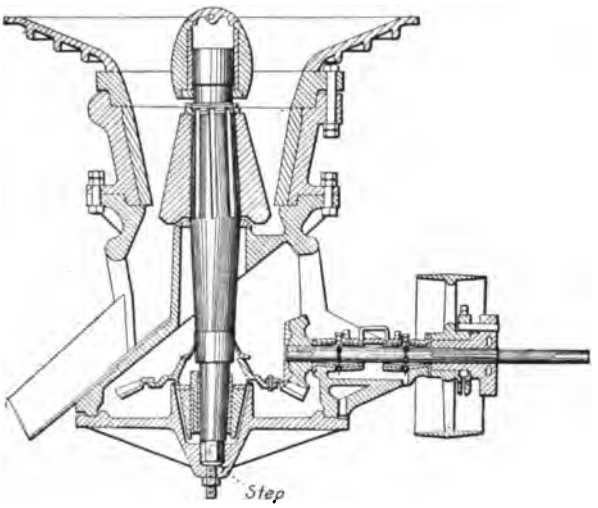

FIG. 95.

material. In selecting a crusher from among the standard makes, the buyer should be guided entirely by price, for all standard machines are well made and their differences are trivial in character.

Floors for Repair Work.—Working floors should be provided at convenient points near the gyratory crusher. There should be, if possible, a floor level with the hopper, or if this is not possible, there should be but one floor on a level with the tracks which receive the bottom plate when it is lowered for repairs. If the work floor is above, the heavy parts, such as the spindle shaft, do not have to be let down or raised up so far in repairing. A trolley controlled by a hand chain should be mounted above the crusher, either on a fixed eye beam or on a crane beam, to move the parts of the crusher to the work floor. A forge, a large kettle for melting zinc, and a separate receptacle for heating babbitt should be provided. The zinc kettle should have trunnions for suspending it from the trolley, and a removable lever for tilting it when pouring.

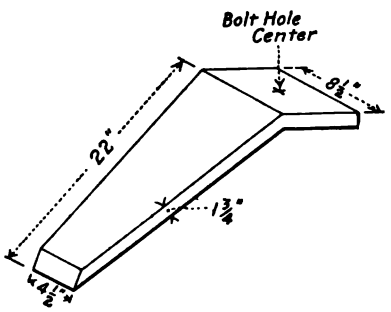

FIG. 96.

In setting the hopper, the arms of the spider should not be pointed toward the feed stream. If this be unavoidable, the spider arms should be

protected by castings to slip over them. The hopper should be protected by chilled castings of the kind shown in Fig. 96.

Lubrication.—For lubrication the manufacturers recommend a very heavy, thick, black oil, which is called "crusher oil." At a number of mills grease has been found equally as satisfactory as this oil for lubricating the eccentric. To introduce the grease into the eccentric, a grease cup is made of a piece of 4 or 5-in. pipe, 2 to 3 ft. long, this being reduced to 1 in. diameter at the point where it enters the eccentric, or to any convenient size to fit the oil opening provided with the crusher. The pipe is closed at the upper end by a reducer, through the center of which passes a long threaded stem provided with a handle at the top end for driving down the grease, and at the other end with a circular disc filling the inner cross-section of the pipe.

Some attempts have been made to mount the eccentric at the fulcrum point, where it would be more accessible for repairs, but as this procedure gives the least motion at the bottom of the crushing head, reducing capacity and increasing tendency to clog, it has never attained to any great vogue.

The eccentric has also been mounted on the spindle shaft in the crushing area, thus causing the head to gyrate on the spindle shaft, the spindle shaft partaking of no gyratory motion. According to Richards, this mode of arrangement dates back to patents issued in 1869, and was the very earliest form of arrangement of the gyratory breaker. The difficulties attending this mode of arrangement lie in the great pressure put upon the eccentric by having it in the resultant of the forces resisting crushing, and consequently great lubrication troubles result from this cause and the additional one that the eccentric is in a position where it is much exposed to the entry of grit and dust. It must be evident also that the tendency to overheating cannot be conveniently watched when the eccentric is in this position, and an overheated eccentric means cessation from crushing to receive attention. The advantages are, a lighter machine, a lower one, hence one with less vibration, and better nipping conditions.

Dodge Crusher.—In addition to the Blake crusher, which is made in many forms differing slightly in detail from the figures accompanying this chapter, there is the form of the Blake principle which is embodied in the crusher called the Dodge. The use of the Dodge crusher is today limited to sampling plants, small transient milling operations and the assay office. The use of these machines is still advocated by some for small crushing plants as a first breaker, but owing to their limited capacity and liability to chokage, and the great amount of fines they make in crushing, they are entirely unsuited for regular crushing plant operations. In the Dodge crusher, the greatest movement of the jaws is at the top, there being no motion at the bottom or discharge point. The pieces entering the mouth of this crusher, after being broken, drop from point to point, just as they do in a Blake crusher, but as they near the egress point, they are less subjected to a movement that will break them, and at the dead point at the bottom, where there

is no motion whatever, they will lodge, or a sufficient number will lodge to close the egress more or less permanently from time to time, thus prolonging the crushing, and by a grinding action at this lower point creating a large amount of fines.

Dodge crushers have been used in a number of cases below first crushers, where the set of the latter has been too great to permit of using medium sized rolls. Strange to say in cases of this kind familiar to me, the capacity of the plant has been well within a combination of Blake crushers and medium sized rolls, but for reasons not within my ken, comparatively large sized gyratories have been employed, necessitating second crushing machines between the gyratory and the medium sized rolls. This procedure, that is a second machine between the first crushers and the medium sized rolls is compulsory where a large capacity is desired, but the choice for second machines should either be large rolls or Blake machines with small openings. It is claimed for the Dodge crusher that they give a perfectly uniform product, and that the wear on the plates is not so accentuated at the discharge point as with a Blake, and consequently that there is very little danger, no matter what the condition of the plates is from wear, of exceeding the safe angle of nip of medium sized rolls. This, however, is no argument for their use, as the small Blakes can be set for a maximum position of opening so as not to exceed safe requirements for the rolls, and the set can be adjusted from time to time to compensate for wear. Again it is perfectly possible to reduce the stroke on the Blake by shortening the pitman or reducing the eccentricity, and this procedure, while reducing the capacity, gives the Blake machine nearly all the advantages of the Dodge without its tendency to choke, for even a very small stroke at the bottom of the jaws stops chocking at once.

Sturtevant Roll-jaw Crushers.—The Sturtevant roll jaw machines do excellent work as second machines, but it is quite questionable to my mind whether their extra complexity of design and greater cost warrant their adoption as against more simple forms of jaw crushers. For large crushing operations, I prefer large rolls to jaw crushers.

Symons Disc Crusher.—The Symons disc crushers have obtained some prominence in late years as second or medium crushers.

CHAPTER VII

ROLLS AND MEDIUM CRUSHERS

The history of power crushing machinery follows the adage of the relationship of necessity to invention. Fine-crushing machines are absolutely essential since comminution is most expensive to do by hand appliances. Consequently a practical form of stamp was receiving a widespread use in Agricola's time. The last development in crushing machinery was the advent of the coarse breaker in 1858, and during the last few years increase in the size of the Blake form for operations of a quarrying character. It would naturally be expected that the rise of medium crushing machines would be during a period between the advent of fine and coarse crushing machinery, and such is the case. Argall says with reference to rolls, the earliest form of medium crushers, and by all odds the most important machine of the class, that

"The late Mr. Richard Taylor stated in 1878, at a meeting of mechanical engineers, held in Cornwall, England, that he believed his father invented the first crushing rolls, and erected them at the Crowndale mine near Tavistock in the year 1806. The mine was then producing large quantities of copper ore, disseminated in gangue, which necessitated much spalling."

To overcome the labor problem involving so much hand work, Mr. Taylor made a set of rolls out of "two lengths of cast-iron pipe 16 or 18 in. in diameter, the ends stopped up with wood in which the axles were fixed." The first continental use of rolls was in 1832. The Cornish rolls of the earliest type were quickly developed to the form which still exists in England today, and well described by Argall in these words:

"The writer's knowledge of the Cornish rolls dates back thirty-three years, when as a lad he saw the mills crushing lead and copper ores with 30-in. rolls keyed on octagon centers, with wood and iron wedges; these rolls were driven by gearing 4 to 5 r.p.m.; a single screen placed below the rolls divided the crushed ores into screenings and oversize, the latter being discharged direct into an elevating wheel mounted on the roller shaft, and returned at once for recrushing. The moving roll was kept up to place by means of levers having a box of scraps, iron or stone suspended at the outer end, usually outside the building."

According to Argall, the first rolls with springs appeared about 1866, and the development of high-speed spring rolls was due to Americans, the late Mr. Krom being a pioneer in their development and long an enthusiastic advocate of their use.

The essential features of any roll are two parallel shafts set in bearings

resting on a frame secured to a foundation of timbers, concrete or masonry. On the shafts are firmly fixed pieces or cores for holding the shells which are two hollow, cylindrical pieces of metal each of the same size and shape and which fit over the cores and take the wear of crushing. The two shafts with wearing shells attached revolve in opposite directions toward one another. Any piece of rock lodging between the revolving faces is drawn in and leaves the rolls reduced in size at a point intersected by a line connecting the centers of the two shafts. Means are provided for changing at will the set or space between the two rolls on the line just mentioned, and means are usually provided by springs or other devices for maintaining a definite crushing pressure upon the rock or ore.

The advantages to be obtained from the use of rolls for medium crushing are great capacity, simplicity of construction, perfect balance of moving parts and reduction to the set of the machine, with a less amount of fines than any machine of any class.

The capacity of rolls is a proportion of the theoretical ribbon. If D equals the diameter of the rolls in inches, N revolutions per minute, W width of face in inches, then C, the capacity in cubic feet per hour, equals $\frac{D.\pi.N.W.S.60}{1728}$. This expression is equal to 0.09 $D.N.W.S$. The weight of broken milling ore varies from 85 to 115 lb. per cubic foot, 100 lb. being an average for milling ores containing medium amounts of iron, zinc, lead, and copper sulphides. Ordinary broken rock, waste and sparsely mineralized vein matter may be reckoned at 90 lb. to the cubic foot. A calculation will show the enormous capacity of even medium sized rolls. A set of 14 × 30-in. rolls, revolving at 70 r.p.m. crushing rock weighing, broken, 90 lb. to the cubic foot to 1/2 in. will have a theoretical capacity of 72 tons per hour. A 6 × 20-in. crusher, which has about the same weight as a set of 14 × 30 rolls, and crushing to 1/2 in. has a capacity not greater than 8 tons per hour, and the size to which the ore is crushed is really not 1/2 in., for some of the large pieces will be of greater thickness than this. Of course in the crusher the reduction to 1/2 in. could be made from a size as great as 8 in., if desired, whereas the rolls could not reduce rock of a larger size than 1–1/2 in., as will be shown later. It will readily be seen that in its field as a medium crusher it is superior to the jaw crusher.

My experience leads me to believe that the actual maximum broken ore ribbon which would pass through the rolls cannot exceed 75 per cent. of the theoretical ribbon, if for no other reason than that it is impossible to use the whole width of face in feeding. Again it is impossible to drop the ore into the rolls in as dense a mass as it occupies in a bin. In falling from the chute into the rolls, air will loosen the mass so that it does not again attain the compactness it has in the bin.

The question of the actual maximum capacity of rolls is not one, however, which need concern the metallurgist ordinarily if there be but a single

passage of the ore or rock through them, no portion being returned to the rolls. For under these conditions, the capacity is so enormous that only exceptionally need it be considered. Before the ore or rock reaches the rolls, it will be found advisable to eliminate fines, and limit the size of the ore by sizing to the set of the rolls. This operation is most advantageously done before the ore reaches the first set of rolls, or when the rock has been crushed to a size of 1–1/2 in. For separating work, it will be best to eliminate fines before each passage through rolls, for it will already have been gathered that the fines are sufficiently unlocked and repeated crushing will merely increase their tendency to make slime. Again if the limitation as to size, indicated by the tests, make necessary a second set of rolls, too great a burden of delimitation will be thrown upon these rolls unless some work has been done for the first set of rolls in this respect. From a theoretical point of view, the rolls appear quite perfect devices for limiting size, and except other crushing machines with immovable discharge openings, or with a screen used as discharge opening, and an integral part of the machine, the rolls when their faces are new as perfect delimiters *in one dimension* as any crushing machine made. The italicizing of the words in one dimension furnishes the clue as to why rolls in common with other machines discharging directly from the small opening of the crushing faces, fail to perfectly limit the size of the largest piece passing out of the discharge opening, so that any dimension does not exceed the set of the machine. Criterion of delimitation is not one dimension but two, that is, beginning back with the test work, the ore is forced to pass through either a square or round opening in a screen, or in other words, the rock or ore must be reduced by crushing to a more or less cubical form, or to a size which in any dimension will pass through the discharge opening of the crushing machine. The square hole of side l of a screen with square holes, or through a round hole of diameter $l\sqrt{2} = 1.414\,l$, $l^2 + l^2 = d^2 = l\sqrt{2}$. Now in order to secure delimitation by screens in the most direct and economical way, recourse must be had to what is called a "closed circuit," an expression first used by me in dealing with some vicious aspects of the ore-dressing practice of the Coeur d'Alenes, and which is really not a good term. But as the expression has come into wide use, its exact meaning had best be defined. An exact analogy of a perfect "closed circuit" would be a pump and pipe as shown in Fig. 97. Water discharges from the point A of the pump, passes through pipe C, and returns into the pump at the intake B. Now the difference between this water flow and the flow, for example, to and from a crushing machine is this, that the crushing machine is constantly receiving fresh accessions of material, which if not removed to a more or less degree at some point in the path C, would quickly cause the rate of feed at B to become infinitely great. If material is removed at some point along C, at the same rate that it is entering de novo at B, then there is no circuit at all, or we may, if we choose, call this an open circuit, but if only a portion of the original amounts fed per unit of time are removed at some point along

C, then the rate of feed at *B* will tend to increase and a closed circuit may be defined as a stream of ore which has one or more vents but not discharging at a sum total rate equal to the rate of feed of the original feeding, the excess returning to and joining the original stream at the point of origin. The criterion of a closed circuit is upbuild. If there is upbuild there is a closed circuit. A common and necessary closed circuit appearing in the crushing plant would be as follows: Feed from crusher 1–1/2 in. and finer; to 16 × 36-in. rolls to 5/8 in.; from rolls to elevator; elevator to screen with 5/8-in. square holes; oversize from screen back to 16 × 36-in. roll. The undersize from the screen passes on for further treatment. The point where the closed circuit originates is at the rolls where the original stream from the crusher enters. See Fig. 98.

Argall has made a study of the oversize return from rolls, taking the material from first passage through

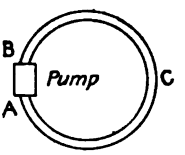

CLOSED CIRCUIT

FIG. 97.

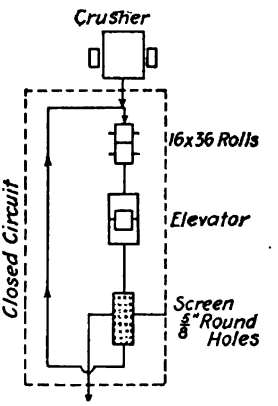

FIG. 98.

rolls and screening it in trommels with square openings of side equal to the set of the rolls, and says,

"My experiments have, however, shown that there is a very close relation between the percentage of reduction and the amount of finished product for any given ore. By percentage of reduction I mean an inch cube reduced to 3/4 in. is 25 per cent., to 1/2 in., 50 per cent., and to 1/4 in., 75 per cent.

"Referring now to diagram, Fig. 99, on the left an inch is divided by a horizontal line into 100 parts, the scale extending 2 in. in height. Next there is a series of diagonal lines to give the percentage of reduction at the given sizes, and lastly a heavy diagonal line marked percentage of finished product for given percentage of reduction. This curve of finished product I have found from actual experiments with quartzose ores of medium crushing qualities. I consider it therefore correct for average conditions with first-class rolls."

Applying the diagram to the case of the closed circuit outline and following the diagonal line from 1–1/2 in. to where the horizontal 5/8-in. (equals 0.625 in.) line intersects, and noting the percentage of reduction below as 58.5, then taking 58.5 on the right hand, and noting where it intersects the heavy line, "Percentage of finished product," the percentage of finished product will be above it on top and in this case 40.

All this can be reduced down to the following expression:

$$F = \frac{125.3\,D - 100\,(D - D')}{1.67\,D},$$

where F is the percentage of finished product, D the diameter of the material entering the roll, and D' the set (diameter leaving). The figures the formula or curves will furnish in any case merely give the upbuild for the first passage around the closed circuit. That is, if r is the time for a

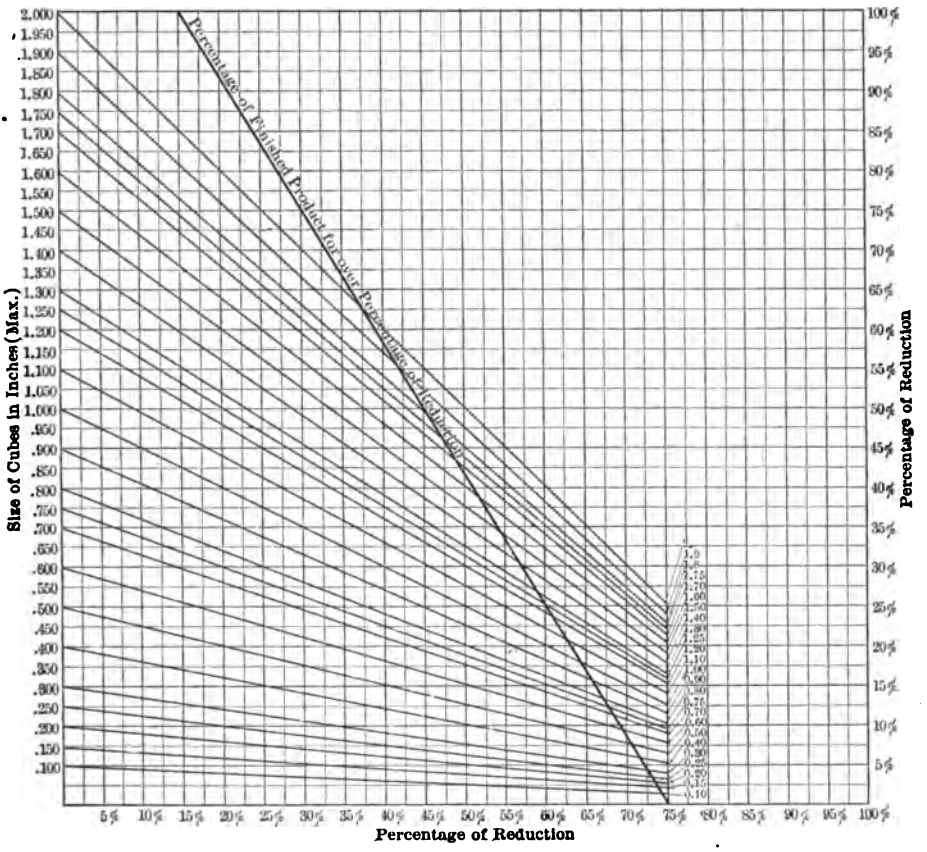

FIG. 99.

particle of returned oversize to leave the rolls, pass up the elevator into the trommel, and return to the rolls, then at the end of time r, after beginning to feed the rolls, the rate of feed becomes $f + 0.60f$ where f is the rate of feed at the start. If the returning particles also make 40 per cent. of finished product, then at the end of time $2r$ the rate of feed will be $f + 0.60f + (0.60)^2f$. The sum of the vanishing series, such as $ab + a^2b + a^3b +$ etc., where ab would be the first term corresponding to $0.60f$ and the second to

$0.06^2 f$ is given by $\frac{m^2}{m - m'}$ where m is the first term and m' the second. The ultmate rate of feed is consequently $f + \frac{m^2}{m - m^1}$. Now if it is assumed that the 14 × 30-in. rolls have a beginning rate of 20 tons per hour, then under the assumption that the percentage of finished product remains constant, the ultimate rate of feed becomes 50 tons per hour, and a calculation based on the first return would give the ultimate rate of feed as 32 tons per hour. There is good reason to believe, however, that the percentage of finished product does not remain constant, but falls off. The main reason for returned oversize lies in the production of pieces too great in some dimension to pass through the screen, and pieces of a more or less cubical character, any dimensions of which are but little less than the set of the rolls. The trouble with the first kind of pieces lies largely with the roll, and that with the second entirely with the screen. Now in order for the first kind of pieces to be nipped on their return passage, they must enter the rolls with their long axis at right angles to the line passing midway between the faces of the rolls, this line being perpendicular to the line passing through the roll centers, an almost inconceivable position of entry so long as the ore is passing into the rolls in a free unpacked screen. If now on the second passage of such pieces, and fixing the mind on their entirely dissimilar character, a less percentage of finished product is made than 40 per cent., it will be more in accordance with actual facts. To give a more nearly accurate idea of the upbuild, let it be supposed as before that the original rate of feed is 20 tons per hour, then in time r it would become 32 tons. If the percentage of finished product is imagined to fall to 30 per cent. on the second passage, then the rate of feeding at time $2r$ is 40.4 tons. If on the third passage the finished product falls to 20 per cent., then the rate of feed at time $3r$ becomes 47.1 tons. If on further passages the fall in the percentage of finished product is 10 per cent. at a time, then evidently a point is quickly reached under these assumptions, when the rate of feed proceeds to infinity.

Original rate, tons per hour	Increment of increase (tons for times)				
	r	$2r$	$3r$	$4r$	$5r$
20.0	12.0	8.4	6.7	6.1	6.1

As the rate of feed upbuilds, a point is reached where different crushing conditions are attained, that is, the feed becomes densified, and forced into the rolls by the weight of ore in the stream above it, and conditions are obtained, as indicated in the figures. Fig. 100 shows slabby pieces passing into the rolls two or more abreast. Fig. 102 shows a slabby piece being held transversely by the ore below and above, and Fig. 101 shows a series of cubical pieces passing into the rolls more or less abreast. These figures show conditions existing in choke feeding. Fig. 101 should be noted, as this indicates how the cubical pieces of edge nearly equal to that of the size

of opening in the screen are finally disposed of. When choke feeding begins the rate of feed becomes stationary. There is no experimental work which will give information as to what the ultimate rate of feed will be, given the original rate of feeding, the ratio of crushing and other figures necessary for solution of problems on capacity, or, in other words, there is no way of determining exactly the actual rate of feeding in a closed circuit. From the figures presented, it can be determined that in the case under consideration but little more than 30 per cent. of the theoretical broken ore ribbon can be used for the original rate of feed. The theoretical ribbon has been found to be 72 tons per hour. Now 30 per cent. of 72 is 21.6 tons per hour. Following the rule for a constant percentage of finished product it can be calculated that the tonnage cannot be less than 54.1 tons per hour, which is very closely 75 per cent. of the theoretical ribbon, which on page 202 is stated as available for capacity. A convenient round figure to use for capacity for the 14 × 30-in. rolls would be 20 tons an hour when crushing in a closed circuit. I believe that the discussion given will enable anyone to properly determine

FIG. 100.

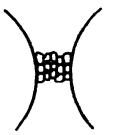

FIG. 101.

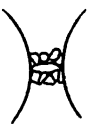

FIG. 102.

the capacity of rolls of any size when crushing in a closed circuit. The rule I follow in every case is to use 30 per cent. of the theoretical ribbon capacity when the roll is used in a closed circuit. Before leaving the subject of capacity, the general principle may be laid down that a roll must not be a part of a closed circuit containing also one or more separating machines. The evil of this will appear in later chapters.

Angle of Nip.—The maximum angle of nip, or angle formed by tangent lines on the surfaces of the two rolls passing through the points of contact of the largest piece of ore rock, of which the rolls are capable of nipping, is dependent upon the following factors: the diameter of the rolls, rate of rotation, and the set or distance apart of the faces. When one-half the angle of nip exceeds the angle of friction of the particle, then it will slide on a roll and not be drawn in. The relation of the diameter and set of rolls to the maximum angle of nip can be obtained from the expression $\frac{r + a}{r + r'} = \cos \alpha/2$, where α is the angle of nip and when the maximum piece is on the point of slipping, the angle of friction equals $\alpha/2$; a equals one-half the set of the roll, r' the semi-diameter of the piece to be crushed, and r the radius of the roll. From this expression it is found that r' equals $r \sec \alpha/2 + a \sec \alpha/2 - r$. If the rule is laid down that the ratio of crushing must not be greater than 4 to 1, then the maximum sized piece which can be crushed under this rule

(making $a = 1/4r'$) is $r' = \frac{4r(\sec\frac{\alpha}{2} - 1)}{4 - \sec\frac{\alpha}{2}}$. The proper angle to consider, as the angle of friction depends on the coefficient of friction, is given below. Morin's experiments showed that the coefficient of kinetic friction is independent of the velocity. Work done since that time indicates that the coefficient of friction becomes slightly less with the increase of velocity. Thus the work cited by Trautwine for determining the coefficient of friction between a brake shoe and a car wheel 43–1/2 in. in diameter showed that the kinetic coefficient at very slow speeds was about the same as the static coefficient (static coefficient about 0.25), and diminished to 0.20 when the speed of the car wheel was 16–1/2 miles per hour, to 0.15 when the speed was 38–1/2 miles per hour and to 0.10 when the speed was 55–1/2 miles per hour. Rolls run at speeds which do not exceed 10 miles per hour. At speeds between 0 and 15 miles per hour, the kinetic coefficient seems to be higher than the static. In designing rolls the diminishment of the coefficient with velocity is usually neglected and the value usually taken is about 0.30, making the angle of friction about 16 deg., 42 min., or the maximum angle of nip 33 deg., 24 min. The nipping can be assisted by dropping the lumps at some height into the rolls. A 42-in. roll at 28 r.p.m has a peripheral speed of 308 ft. per minute. A 2-in. lump the maximum size which will be nipped by a 42-in. roll falling from a height of 21 in. above the centers of the rolls, which would be the minimum height at which rolls could be fed, would lodge at a point approximately 5 in. above the line connecting the centers of the rolls. This would give a minimum drop of 16 in. if it fell squarely into the rolls, and it would attain a velocity of 552 ft. per minute, an excess over the peripheral velocity of 244 ft. per minute, or 4 ft. per second. Now if the excess is called x, expressed in feet per second, it can readily be shown that x has an effect of increasing the coefficient of friction to an amount equal to $\frac{x}{g}\tan\mu$, where g is the constant of gravity and $\tan\mu$ the coefficient of friction. The force of the falling pieces at the moment of reaching the rolls is $\frac{Wv}{g}$ and the component tending to slide the lumps on the tangent line of one roll is $\frac{Wx}{g\cos\mu}$. The force of friction U equals $cW\sin\mu$ can then be equated to the first expression to determine the extra increment of coefficient of friction c caused by the falling lumps. On equating c in this case, the extra increment becomes equal, $\frac{x\sin\mu}{g\cos\mu} = \frac{x}{g}\tan\mu$. In the case under consideration the increment of increase is $\frac{4}{32.2}\tan\mu$.[1]

Argall has embodied the relations of size of roll and peripheral speed to

[1] W, here is the unit weight of flow as in hydraulic problems.

angle of maximum nip in a series of curves which are shown in Fig. 103. He says: "A careful series of experiments carried on intermittently some years past has convinced me that there is a speed for each size of material which gives the best results, or in other words, where the maximum capacity is attained with the minimum power." Fig. 104, published by the Power and Mining Machinery Company and founded on Argall's work, I believe follow practice more closely than do Argall's. The main difficulty with Argall's diagram lies in the low speeds for the larger machines and the cost and difficulty in making reduction to such speed from the prime mover.

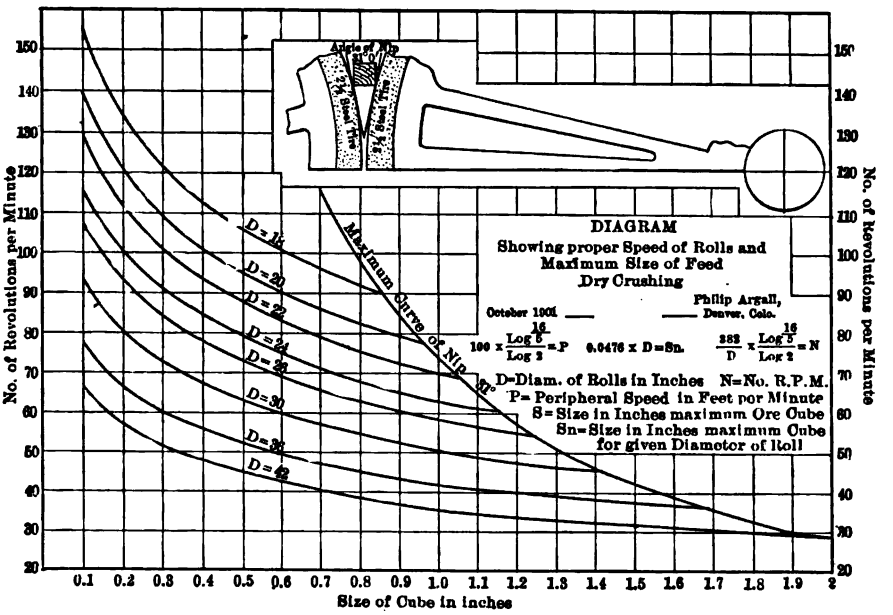

FIG. 103.

The useful work used in crushing by rolls, as with every other crushing machine, is merely the product of the factors brought in by reduction in size and the tonnage crushed. Let 10,000 lb. per square inch be the crushing strength of rocks or ores of average resistance, and let it be desired to determine the power required to crush the maximum amount of rock short of choke feeding from 2-in. pieces to 1/2-in. pieces, which the rolls are capable of receiving, the rolls being 42 in. in diameter and revolving thirty times per minute. The average diameter of piece is 1–1/4 in., it being considered that everything under 1/2 in. has been removed by screening, and that the bulk of the pieces are nearer to 2-in. size than 1/2-in. size. It is also assumed that the voids in the portion of the tonnage reaching the rolls are 50 per cent., then the crushing pressure necessary for square inch of roll surface in contact with the rock is 5000 lb. per square inch. To break the

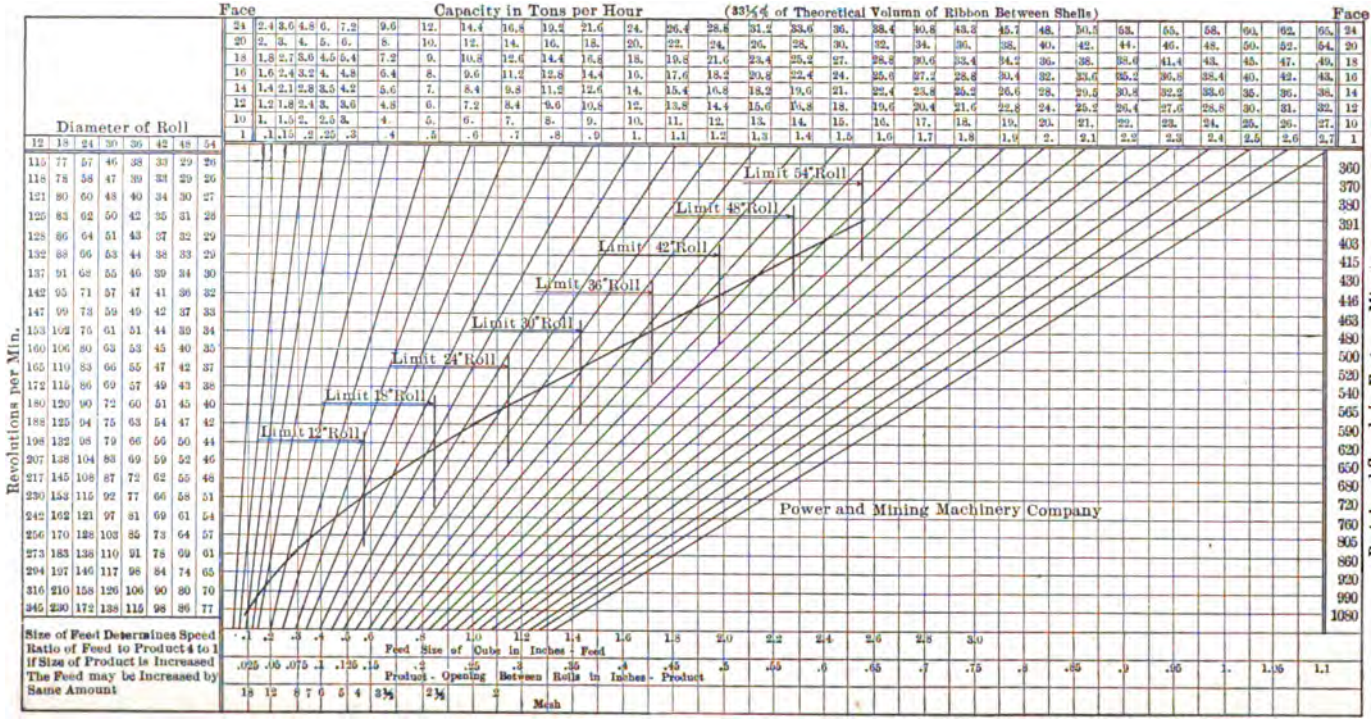
Face
Capacity in Tons per Hour (33⅓% of Theoretical Volume of Ribbon Between Shells)
Face
Diameter of Roll
12 18 24 30 36 42 48 54
Revolutions per Min.
Limit 54"Roll
Limit 48"Roll
Limit 42"Roll
Limit 36"Roll
Limit 30"Roll
Limit 24"Roll
Limit 18"Roll
Limit 12"Roll
Power and Mining Machinery Company
Peripheral Speeds in Feet per Minute
Size of Feed Determines Speed Ratio of Feed to Product 4 to 1 if Size of Product is Increased The Feed may be Increased by Same Amount
Feed Size of Cube in Inches - Feed
Product - Opening Between Rolls in Inches - Product
Mesh

FIG. 104.

rock it may be assumed that it must be compressed 0.003 ft., but as the pressure exerted at the start is zero, it can only be conceived to act through one-half this distance; consequently, the foot-pounds required for breaking the average 1-1/4-in. cube is $[(1-1/4)^2 \times 5000 \times 0.0015] = 11.72$ foot-pounds. After the first break it may be considered that the average cube is 0.625 in. on an edge. There are now eight cubes of edge 0.625 in. and the power required to break these is consequently $8 \times 0.625^2 \times 5000 \times 0.0015 = 23.44$ foot-pounds. The total foot-pounds for breaking down the average cube is 35.16. For a line of average lumps on the width of the face of the rolls (16 in.) it requires $\frac{16}{1.25} \times 35.16 = 450.1$ foot-pounds. If the rolls are 42 in. in diameter and revolve thirty times per minute, and in 1 minute the distance traversed by a point on the periphery is 3958.42 in., the horse power is then $\frac{3958.42}{1.25} \times \frac{450.1}{33{,}000} = 39.3$ horse power. This corresponds to 43.3 tons per hour, theoretical capacity.

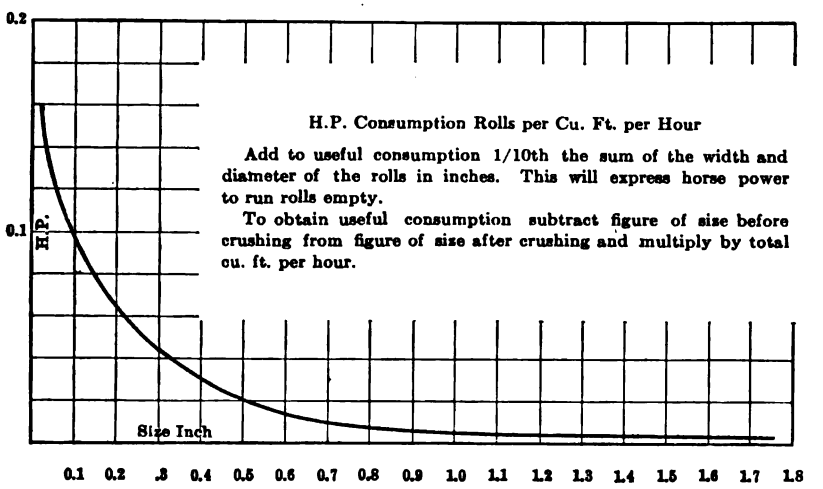

FIG. 105.

This discussion of the absorption of work done in roll crushing is rather hypothetical and is introduced merely to make clear the nature of it. It is assumed that a cube of edge x, area of face x^2 on crushing yields three new planes or $3x^2$ of new surface, but apparently there is actually about $6x^2$ of surface produced, a relation I have arrived at by ascertaining the recorded figures of tests in shearing and compression. Since but 75 per cent. of the theoretical capacity is available, the useful work absorbed in crushing under the assumptions of the discussion would not exceed 29.5 h.p. For practical guidance in the horse power consumed by roll crushing, reference should be made to the diagram, Fig. 105, and the accompanying data.

It would seem that the power consumption for crushing per ton per hour

was independent of the rate of rotation of the rolls, the set and diameter remaining unchanged; that the ratio of total to useful work should diminish as the rate of feeding increases, or, in other words, the power for turning over the rolls becomes a less appreciable factor as the rate of feeding increases. Rolls give the best efficiency when run near the maximum capacity. It has been shown that when run in a closed circuit the rolls are bound to attain heavy loading, but the metallurgist frequently employs rolls for free crushing as in an open circuit, and in many of these cases the angle of nip and diameter of roll are of paramount importance, and this often results in an incongruous size of roll, the rate of feed reaching then but a pittance of their capacity. In selecting a size of roll, the first and most important point to decide upon is the angle of nip. The smallest roll practicable for nipping the rock should be selected, provided this size gives sufficient capacity. If the angle of nip is well below the double angle of static friction, as it frequently is in fine crushing, then the smallest practicable mill roll 20 in. in diameter can be used. If the roll is to be used in a closed circuit, then the speed may safely be increased as the size of material to be crushed decreases in diameter. If, on the other hand, rolls are used for free fine crushing, then the roll and speed should be selected so as to throw a burden upon them as near capacity as possible. If the roll faces are in perfect condition and set shut, then in fine crushing, unless the rolls are revolving at a comparatively low rate, much material will escape crushing, owing to unpreventable lost motion. If the rolls are corrugated then the rate of feeding, and the speed of rolls, must be such that the open spaces formed by the corrugations will be filled with rock and ore. The cross section area of corrugated spaces is roughly equal to the average cross sectional area of the pieces fed to the rolls. One way of explaining corrugations is by considering them the peripheral spread of soft spots in the shells, the corrugations being always at right angles to the axis of the rolls. Once a corrugation is started it tends to become worse, and since the bulk of the ore enters the corrugation, the other roll also becomes corrugated at opposite points. This explanation of the phenomenon of corrugation is not an entirely satisfactory one, for it does not account for the frequently quite regular disposition of the corrugations from one side of the roll faces to the other, and their uniformity as to shape, depth and width.

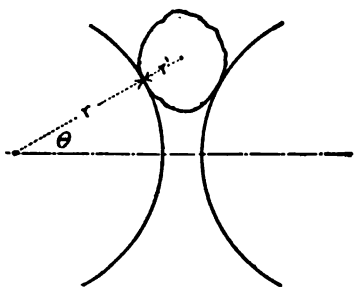

FIG. 106.

Some interesting relations in roll crushing can readily be deduced, showing differences in their mode of doing work and Blake crushers, which also work on the toggle principle. If r, Fig. 106, is the radius of the roll, and r^1 the radius of the sphere to be crushed then evidently the measure of capacity at any point for different values of θ, is the downward component of

the peripheral velocity at the point times the width of opening at the point. For the points 15°, 12°, 9°, 6°, 3°, and 0°, the products of these factors are:

w equals width for initial position equals $2\ r' \cos 15°$

15°, $p' \cos 15°\ w = 1.88$

12°, $p' \cos 12° [w - a\ (2 \sin 13\frac{1}{2}°)] = 1.45$

9°, $p' \cos 9° [w - a\ (2 \sin 13\frac{1}{2}° + 2 \sin 10\frac{1}{2}°)] = 1.10$

6°, $p' \cos 6° [w - a\ (2 \sin 13\frac{1}{2}° + 2 \sin 10\frac{1}{2}° + 2 \sin 7\frac{1}{2}°)] = 0.85$

3°, $p' \cos 3° [w - a\ (2 \sin 13\frac{1}{2}° + 2 \sin 10\frac{1}{2}° + 2 \sin 7\frac{1}{2}° + 2 \sin 4\frac{1}{2}°)] = 0.64$

0°, $p' \cos 0° [w - a\ (2 \sin 13\frac{1}{2}° + 2 \sin 10\frac{1}{2}° + 2 \sin 7\frac{1}{2}° + 2 \sin 4\frac{1}{2}° + 2 \sin 1\frac{1}{2}°)] = 0.59$

where p' is the peripheral velocity and, being a constant, is omitted for comparative calculations, and a, the chord of the arc 3°, $r = 21$ in. and r' taken at 2.00 in. It will be seen that the capacity from nipping to the discharge point does not decrease in arithmetical progression, but much faster until points are reached near the discharge point when the capacity is nearly stationary. When rolls choke they consequently do so at a point below but near the nipping point. If a certain amount of void is assumed to exist in the rocks at the point it enters the roll, there must be considerable reduction in this void as the ore progresses to the discharge point, or if the ore enters compactly there must be more or less choke crushing before the pieces leave the roll, and to avoid choking, the springs must yield to an appreciable degree increasing the set. On account of choking, springless rolls cannot be satisfactorily used for choke crushing.[1]

In the case which has been described as crushing 2-in. cubes and smaller with 42-in. rolls, the crushing force is 5000 lb. per square inch of surface, or 80,000 lb. per inch per width. Now the average diameter of piece is 1–1/4 in., and this will be nipped at a point corresponding to $\theta = 10$ deg., approximately. To find the pressure caused on the roll bearings by breaking the line of particle of average diameter 1–1/4 in. at their average nipping point, 80,000 must be divided by cos 10 deg. The pressure on the four bearings for the initial crushing operation is consequently approximately 81,500 lb. After crushing the first line of particles it has been assumed that the broken pieces occupy two lines of particles 16 in. wide, and that consequently 160,000 lb. pressure will be required for the second break, but θ is now approximately 7 deg., and the pressure on the bearings 243,500 lb., making the total pressure on the bearings from crushing per single bearing 60,875 lb.

The angle at which the resultant pressure passes through the bearings varies from moment to moment, and it would be difficult by mathematical analysis to fix this angle with sufficient exactness to make the result attained

[1] A simpler expression for capacity but one not so easy for making calculations is, where s is the set of the rolls, capacity is proportional to the expression $(2r + s - 2r \cos \theta)$ $p' \cos \theta$ for the opening at any point is $2r + s - 2r \cos \theta$ while the downward component of the peripheral velocity $p' \cos \theta$ and the capacity is proportional to the product of these two values.

of practical value. In practice many modern rolls have bearing metal on the lower rear arc of the bearing circle, the bearing metal being distributed an equal distance below and above a line making 45 deg. with the horizontal,

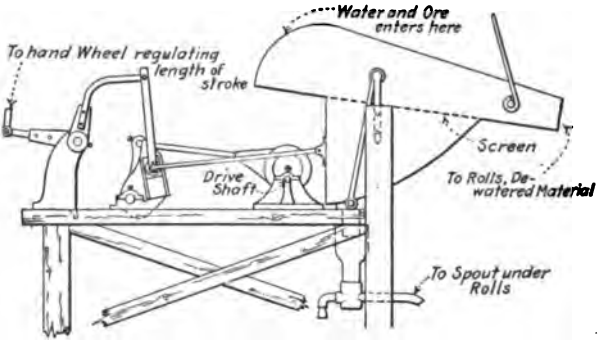

FIG. 107.

and passing through the centers of the shafts. To find the resultant pressure on the bearings and its direction, the resultant pressure due to crushing and the weight of the rolls would have to be resolved. The direction and amount

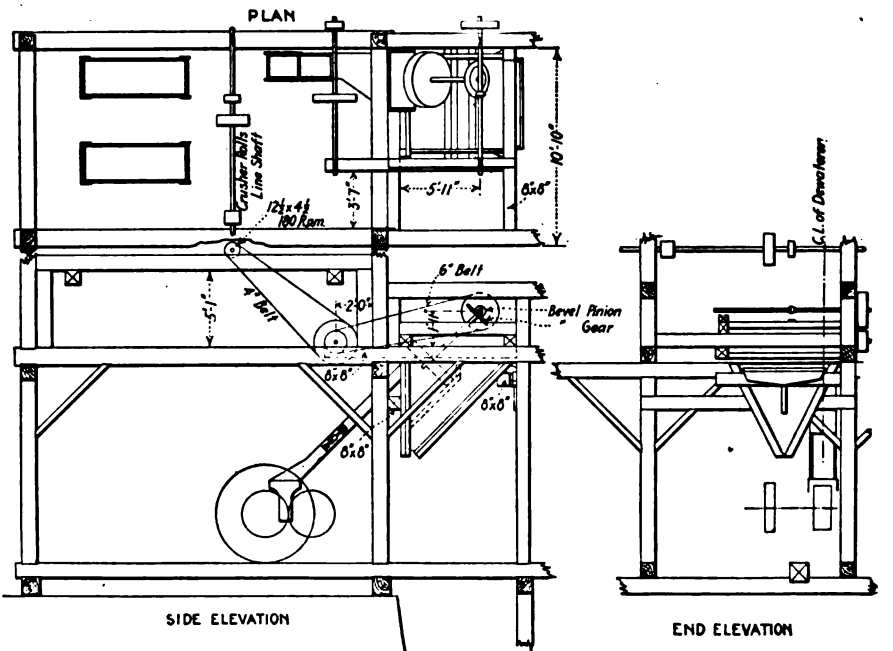

FIG. 108.

of the resultant pressure can be found by $R = (\Sigma F \cos \theta)^2 + (\Sigma F \sin \theta)^2$. where ΣF function of θ is the sum of F' function θ' plus F'' function θ'', etc., or is the sum of the horizontal and vertical components squared re-

spectively. The direction of the resultant is given by $\cos \theta = \frac{\Sigma F \cos \theta}{R}$, or $\sin \theta = \frac{\Sigma F \sin \theta}{R}$. Having R and its direction, the proper spring pressure may also be determined, $\cos \theta \times R$.

In a certain standard 16 × 42-in. roll the bearing is 18 in. long, and the diameter of the shaft 7 in. One-half the shaft will be under pressure on an area of about 200 sq. in. and the bearing pressure per square inch will be about 300 lb.

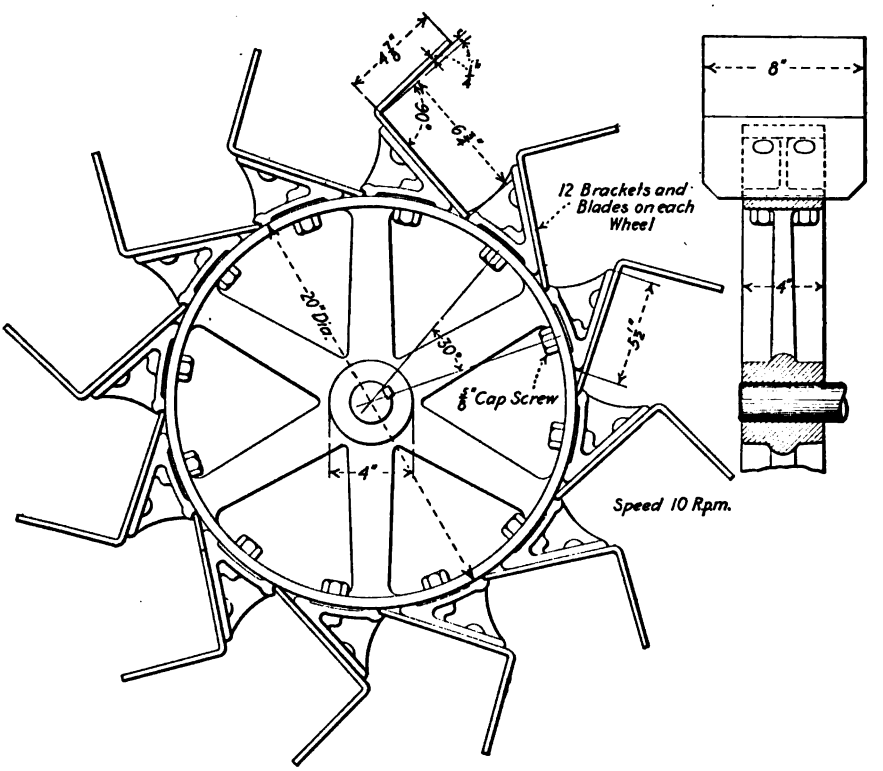

FIG. 109.

Dry feeding may be done by a high angled spout or if the rolls are fed from a bin, plunger, pan, or roll feeders may be provided, the details of which have already been given. A short endless belt makes the best dry feeder between a bin and rolls. I arrange these feeders on a frame provided with castors so that the whole feeder may be rolled back out of the way when repairs are being made. Suitable devices are provided for locking the frame when the feeder is in service.

For wet feeding the feeders must be of a dewatering pattern. Fig. 107 shows a feeder of this type which is excellent for coarse feeds. For dewater-

ing and feeding fine material, a dewatering wheel may be employed, Figs. 108 and 109, or a drag conveyor, Fig. 110.

Lubrication.—There seems to be considerable difference in opinion concerning the maximum pressure to which bearings are capable of being subjected, but such differences are reconciled when the more or less perfection of the lubrication is considered. When the lubrication is perfect, high pressures are borne with impunity. Where it is imperfect, as it is in ordinary journals, lubricated with grease and oil cups, not more than 100 to 200 lb. per square inch can be borne without overheating. Car brasses when new have bearing pressures up to 6000 lb. per square inch, but these high initial pressures very quickly reduce to about 1700 lb., because the area of contact be-

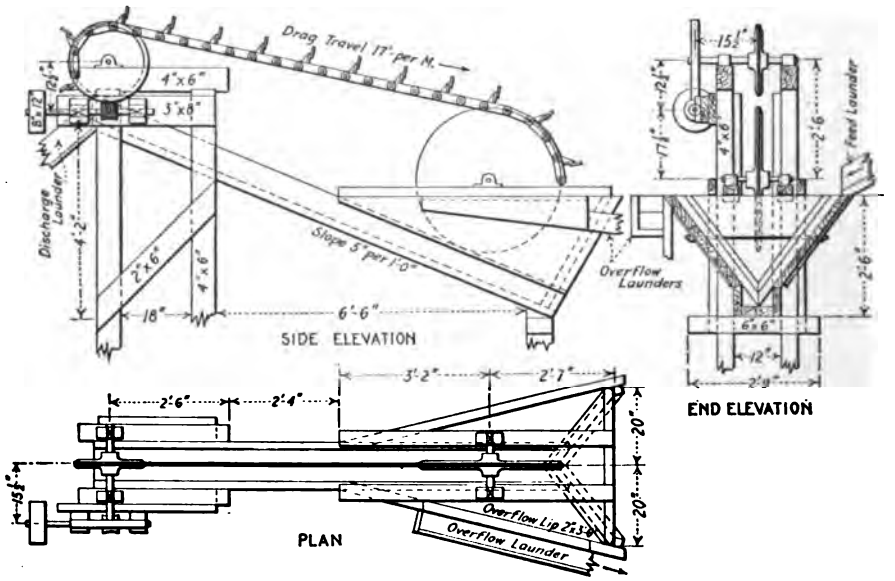

FIG. 110.

comes greater under wear. One explanation of the reason why car brasses give satisfactory service under such high pressures is that they quickly become highly polished both by pressure and grinding down in a peripheral direction, and by an endwise play of the car axle in the bearing. And in addition the mode of lubrication is very perfect. For ordinary bearings lubricated by grease and oil cups, the laws of Morin seem most nearly to hold; that is, for any given pressure the total frictional resistance is independent of the area of the bearing, and independent of velocity, very nearly, though it increases somewhat with increase of velocity. Under these laws also, the pressure must not be of an amount which will cause abrasion. Now with perfect lubrication, that is, lubrication where there is a film of lubricant between the shaft and bearing, very different conditions prevail, and these have been

stated in certain laws which have been given by Kent. For any definite speed above 100 ft. per minute and with changes in the pressure, the total frictional resistance remains constant. This means that within the limits of abrasion the area of the bearing surface is immaterial. As the pressure per

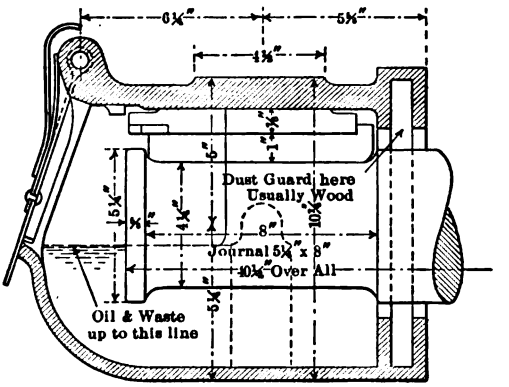

FIG. 111.

square inch increases the coefficient of pressure becomes less to a degree that the product of the two factors, pressure and velocity, giving the frictional resistance per square inch is practically a constant. At speeds above 100 ft. per minute, the coefficient of friction increases and varies in the ratio of the square root of the velocity; consequently high speeds above 100 ft. per

FIG. 112.

minute increase the friction, though not to a degree proportionate to the velocity. The perfectly lubricated bearing has with 200 ft. per minute speed, a coefficient of friction of about 0.001 for a brass-iron combination as compared with 0.075 to 0.103 for inefficient lubrication. These results show at once that an efficient mode of lubrication is essential with rolls which have

high bearing pressures. An excellent example of a simple and very efficient bearing is the one already mentioned, a car-journal bearing. Several manufacturers have adopted this kind of bearing for rolls, the pioneer in their use for this purpose being apparently the Sturtevant Mill Company, and the modification of the design shown in Fig. 111 of the Standard railway bearing for a journal 4-1/4 by 8 in. used by them, is shown in Fig. 112. The principal objection to so completely exposing the shaft to the action of the lubricant is the danger of chatter from the shaft itself moving in the bearing. It is true that the oilway in the Sturtevant bearing does not extend entirely through the bearing, but the tendency of the shaft to chatter will cause wear on the bearings where there is least lubrication. What may be denominated semicar-journal bearings are now used by all the manufacturers of straightlined rolls. In practically all these designs the shafts rest in an inclined shell of anti-friction metal of 180 deg. arc. Inclined bearing caps hold the shaft in the bearing, and carry one or more oil wells with covers in which oil-saturated waste is kept. A limited portion of the shaft is in contact with the lubricant, though to be sure a far larger area than is provided by the small pipe-like openings below oil and grease cups. The lubricative effect of such an arrangement cannot be considered as good as that of the Sturtevant design, which approaches the excellent lubricating conditions obtaining in car journals. In my opinion oil used in this way is not as efficient as ordinary yellow grease, introduced by plain cast-iron cups, for this lubricant stays in the bearing better, requires less attention and is a far better protection against the entry of grit and oil. In good modern roll design the ends of the bearings are enclosed at the end nearest to the shell by a flange which forms an integral part of the core or follower, and at the outer end by an enwrapping collar. The grease working out of the bearings provides a seal at the end. In the majority of rolls on the market today the means of providing lubrication are very imperfect and therefore bearings of liberal size are imperative. According to Trautwine (page 414, 18th edition), abrasion of dry surfaces of brass and cast iron begins at a pressure of about 820 lb. per square inch, but in the case of roll bearings either in dry or wet crushing, owing to the presence of grit, abrasion must set up at very low pressure. Bearing troubles with rolls are very common, just as they are with any kind of crushing machine, and are particularly noticeable in dry crushing in a closed circuit. The tendency of late years among manufacturers has been to increase the size of the bearings, but in my opinion better lubricating methods and better protection against dirt will be more effective than larger bearings.

The use of water cooling arrangements may also be useful to the millman. Overheating in a roll, which normally runs cool, is probably due to a sudden addition of grit entering the bearing; to a wearing out or squeezing out of the grease and oil grooves and to grooving of the shaft by grit and ground up babbitt, etc. The use of water under such circumstances would not be a

curative but a palliative. The use of water would frequently enable the millman to continue operating his rolls until such time as would be convenient for a shut-down. Under very severe service also, and when everything connected with the rolls is in the most favorable condition, overheating will often occur and the use of water will prevent the destruction of the lubricant and the injury of the shaft and anti-friction metal. Some causes of overheating are sudden and obscure, thus in certain experiments made on the overheating of car brasses there would be one day when the car brass would run perfectly cool under 5000 lb. per square inch pressure, and the next day overheat violently, and the only explanation for this anomaly was that accidental variations in the smoothness of the surface of the bearing, quite small, but causing great differences in the friction. In cases of sporadic heating water would be an invaluable aid to the millman.

The formula given by Kent for the horse power absorbed by bearings is horse power $= \frac{fWdn}{126{,}050}$; where f is the coefficient of friction, W the weight on the bearing, d diameter of shaft and n the number of revolutions. In cases of imperfect lubrication 0.075 may be taken as the coefficient of friction. W is the resultant pressure due to weight of drive pulley, core, shaft, followers and shell, combined with the pressure created by crushing.

The proper diameter of shaft may be calculated by the ordinary formulæ of applied mechanics for combined bending and torsion, remembering that in applying the bending formulæ that as above, the resultant of the crushing pressure component must be added to the weight of the shaft, etc.

Securing Shell to Shaft.—The earliest mode of securing the crushing shell to the shaft was by keying a solid cylinder to the shaft, the former being merely pierced with a hole the diameter of the shaft. After the shell became badly pitted and corrugated so that it had to be thrown away, a large amount of metal was wasted. The next advance was to have a polygonal fixed piece or core forced or shrunk on the shaft, or keyed to it, and over this was slipped the shell, circular outside and with polygonal opening in the center to correspond with the polygonal shape of the core. In this mode of attachment the shell was held in place by wedges. The shell with polygonal slot was difficult and expensive to make, and was abandoned for shells of simpler character. The pure friction hold which is universally used today is the invention of Krom. Krom's first device was a conical core and a shell which tapered inside, the head of the bolts rested against the core, and the nuts partly on the core and the shell. A portion of the bolt was in the core and a portion in the shell and to some extent this prevented one member from sliding on the other, but the friction of the two surfaces in contact was the controlling factor for holding the shell firmly on the heart. Unless there be sufficient pressure brought about by turning up on the nuts, to prevent the surfaces from sliding even to the slightest degree under the shock and vibration of crushing, the shells become loose and the rolls must

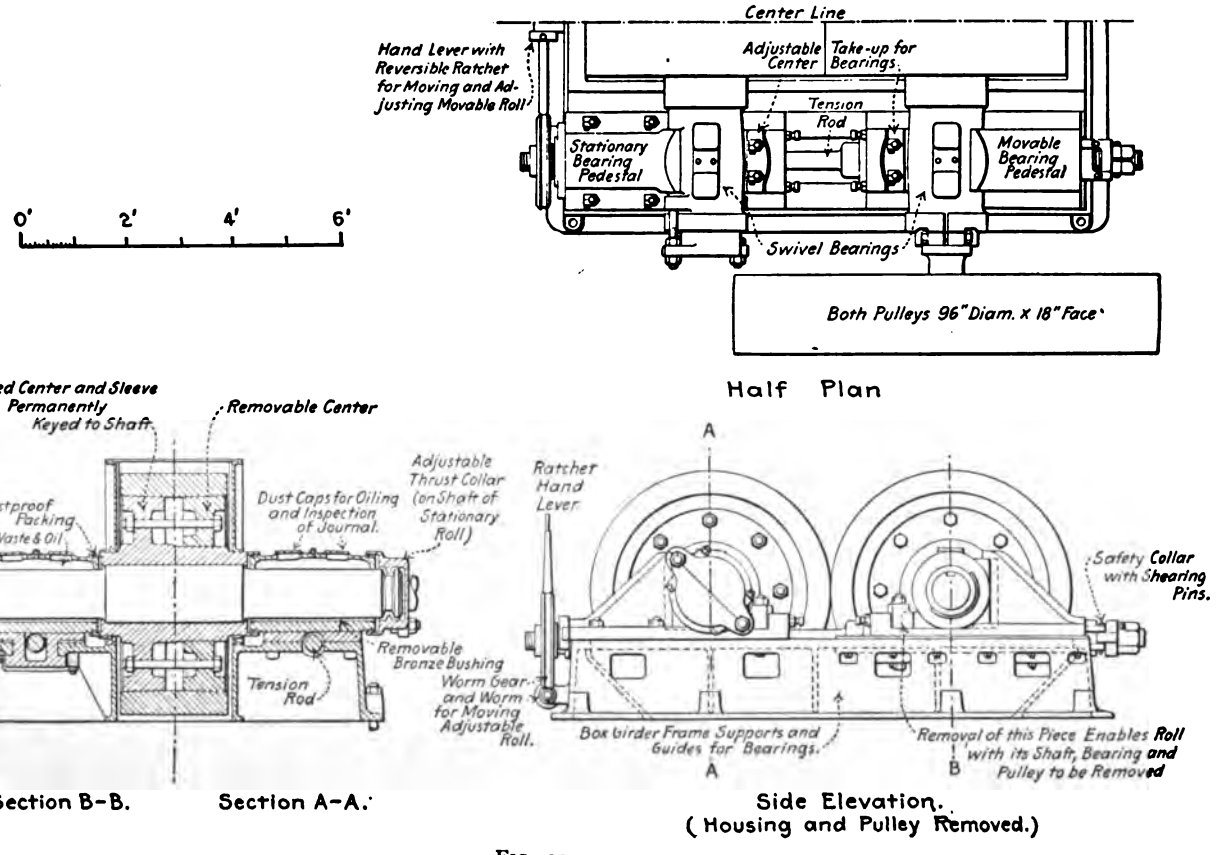
Center Line
Hand Lever with Reversible Ratchet for Moving and Adjusting Movable Roll
Adjustable Center
Take-up for Bearings
Tension Rod
Stationary Bearing Pedestal
Movable Bearing Pedestal
Swivel Bearings
Both Pulleys 96" Diam. x 18" Face
0'
2'
4'
6'
Half Plan
Fixed Center and Sleeve Permanently Keyed to Shaft
Removable Center
Thrust Collar (on Shaft of Movable Roll)
Dustproof Packing
Waste & Oil
Dust Caps for Oiling and Inspection of Journal.
Adjustable Thrust Collar (on Shaft of Stationary Roll)
Thrust Washers to Distribute Wear
Removable Steel Wearing Strip.
Removable Bronze Bushing
Tension Rod
Section B-B.
Section A-A.
Ratchet Hand Lever
Worm Gear and Worm for Moving Adjustable Roll.
Box girder Frame Supports and Guides for Bearings.
Safety Collar with Shearing Pins.
Removal of this Piece Enables Roll with its Shaft, Bearing and Pulley to be Removed
A
B
Side Elevation.
(Housing and Pulley Removed.)

FIG. 113.

be taken to pieces and another trial made to properly secure the shell to the core. The trouble with the first Krom device was that the core and shell being practically incompressible a tight hold could not be secured, and again unless both these pieces were of exactly the same size, the nuts would not have a good bearing when the bolts were drawn up to place. Krom proceeded from this design to the form used almost exclusively today and shown in the section Fig. 113. The essential features of this design are a core which is forced on the shaft, the portion of the core directly in contact with the shaft being wider than the face of the shell. Arising from this hub is a disc-like portion of the core with inward tapering face which rests against a tapering face of the shell. A follower slips over the core on the opposite side; also with tapering face and the several pieces comprising the arrangement are drawn up by bolts. The follower is split at one place, Fig. 114, so that as it is forced into the shell the gap so made is slowly closed up. Krom's original design did not provide for the core extending through the follower, and in this respect his arrangement was inferior to modern design. Such extension of the core allows of larger bearing surface on the shaft. Before the general adoption of the Krom type in its improved form there was in use a central core or heart, two split followers with tapering edge and tapering edge to the shells. The inferiority in this arrangement lies in the fact that there is no fixed member to which to draw; the heart is of no service, its only function being to center the shell while the followers are being drawn to place, and the latter are in no way rigidly connected with the shaft. It is not surprising, therefore, that the shells became loose in service, and such was the experience with this arrangement.

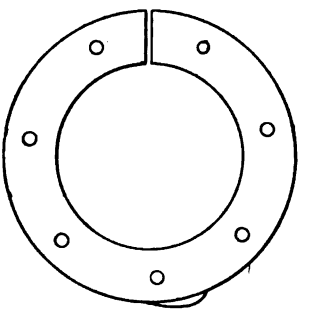

FIG. 114.

In putting new shells in place they are centered on the core, the core and shaft being blocked up sufficiently to this end. The follower is then put in place and drawn up with bolts; then the core and follower are sledged around the face near the junction of the shell, and after a period of such sledging the nuts are again tightened. Long handled pipe wrenches are best for this purpose. By periods of sledging and tightening the roll shell is firmly secured in place. Occasionally the roll is turned over a waste and oil fire in order to enlarge the shell by expansion; thus enabling the follower to be forced in further and the shell to have a tighter grip when it has cooled. With large rolls I have seen a working day consumed in this operation. It is very slow and uncertain in results, and occasionally a few hours after the rolls are in operation the shells become loose and the work must be done over again. The principal reason for accidents of this kind is the wide variation in the dimension of the roll shells and followers; the tapers do not match well

or the shells are of too small diameter in the tapering portion or the followers too large in the similar portion. If a shell fits well on the core provided with a roll, and when drawn up tightly its face is flush with the edge of the shell and similarly favorable conditions exist on the follower side, then the shell, follower and core should be carefully measured and a drawing made from measurements thus obtained. After this, ordering should be done by the drawing and the manufacturers compelled to comply with them exactly. If there is no variation in the size of these pieces, then very little experience will enable the millman to assemble the rolls in an efficient manner. The operation proposed may consume a little time when urgently needed during a shutdown for repairs, for then every one is in a great hurry to get started, but it is worth while to obtain these measurements even under these disadvantageous circumstances.

There seems no reason why in large crushing plants there should not be a hydraulic device for forcing the followers to place. Such an arrangement would consist of three cylinders 120 deg. apart connected with a hand or power pump for pressing against the follower, and mounted with three contact buffers placed upon heavy screw bolts, at points opposite to where the cylinders come into play. Such a device would have a pressure gauge to afford the means of always securing the pressure, which experience has shown to be the best.

Shells have also been secured to cores by driving in wooden wedges in tapering annular spaces left between the core and the shell. The difficulty with this arrangement is its excellence. It is hard to get worn shells off the hearts.

Driving Pulleys.—Wooden drive pulleys find much favor with the manufacturers, as it is claimed they absorb the shock of crushing better than cast-iron ones. I have never had any trouble with cast-iron pulleys breaking, even under very severe service. The principal objection in my mind to the use of wooden pulleys is that they obstruct the vision. Modern spring rolls are usually driven by two belts, there being one pulley to each roll. The belts are of course on opposite sides of the machine. One pulley is usually about half the diameter of the other; the larger pulley being supposed to give a flywheel effect. More freedom for the inspection of the rolls can be obtained on the side where the small pulley is secured. There is no reason why diameters of pulleys other than the standard sizes furnished by the manufacturers should not be used, provided the exigencies of design demand it. For best conditions of wrap of belt on pulleys, rolls are best driven from a shaft located above or below the rolls, but present day designing conditions usually call for horizontal drives, or the location of the driving shaft below the rolls.

Geared rolls are scarcely or at all used in present day ore mill practice, with the exception of a few places in the Mississippi valley. In rock crushing plants in the eastern part of the country, geared rolls are sometimes used.

Roll Bearing.—Bearings have been partially mentioned in connection with the subject of lubrication. The two-piece or cap bearing is commonly used, the split being placed on an angle. This cap is secured with cap screws or inclined wedges, the latter being preferable, as the wedge tends by gravity to hold the cap in place, but it is not an essential point whether one or the other is used. The two-piece bearing is not as good as the single-piece in the matter of dust protection. Where the single-piece bearing is used, some simple mode of removing it from the pedestal must be adopted. The Allis Reliance rolls had a one-piece bearing which was made ball shaped in the center, this portion fitting into a similar recess in the frame. A curved covering strap or outside cap, bolted over the bearing and held it securely in place. When the rolls were repaired these covering pieces were removed and the bearings raised with the shells and shafts. After the pulleys were taken off the shaft the bearings could be slid off. In the latest design of rolls put out by the Denver Engineering Works the machine is of the pedestal or straight line type, the bearings single piece and of the kind just described, but they are not held in place by covering pieces, but by a block in the lower corner of the pedestal, held by bolts and set screws. See Fig. 113. This roll has a car journal bearing, the anti-friction metal occupying an arc of 180° and consequently there is the same liability to chatter due to shaft movements.

Recent and Old Type of Rolls Compared.—Before passing on to the other essential details of rolls, it will be well to consider the relative merits of present day practice and that of a decade ago. At that time a roll called the Reliance roll, manufactured by W. P. Allis & Son, was in much favor among millmen. Fig. 115 shows the general arrangements of this roll. The most excellent features of this roll were that they did not choke under very heavy feeding. The general features of present day design are shown in the figures accompanying this chapter. There is a low, heavy base frame, four pedestals carrying the bearings, two firmly fixed to an integral part of the frame, and the other two sliding on the frames and held up to the work of crushing by springs. The Reliance roll revealed many defects. Owing to the high position of the shafts, and particularly of the movable shaft, vibration was great and it was difficult to keep the tension rod tight. The pins at *A*, forming the supports for the movable roll, were not of sufficient length for resisting sidewise movements. Much time was required to take the rolls to pieces and reassemble them. The reason why these rolls did not choke is this:

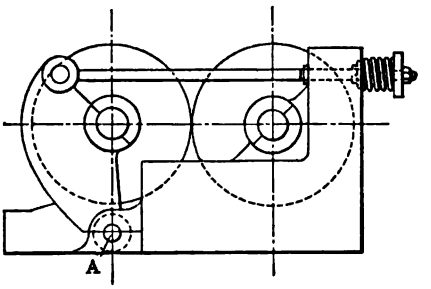

FIG. 115.

The resultant crushing force meets the lever supporting the movable shaft at a point outside any point on the pin below (pin *A*). With the movable pedestal roll the resultant passes through the bearing surface on the frame, and the downward component of this resultant, by increasing friction, helps to resist movement. With the Reliance roll the downward component assists in giving a turning movement. The straight line or pedestal type is sluggish in its movements. If the shafts are mounted high in the pedestals, or the latter are not of great length, and the spring is carried below the center

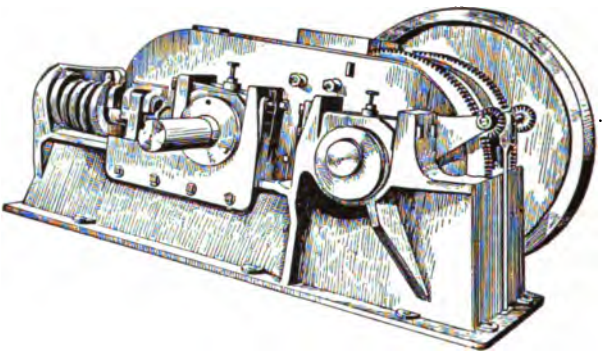

FIG. 116.

line of the rolls, the pedestal will tend to rotate about the back edge before it begins to slide, and this will cause binding on the slides. Dirt lodges between the pedestal and the slide, and having no way to get out impedes motion.

The tendency among manufacturers today is to lower the shaft to a point as near the base frame as possible, and to lengthen the pedestal to the rear of the shaft. The best position for the spring is in the extension of the

FIG. 117.

center line of the rolls, and if this position is adopted the springs must be placed back of the movable roll, Figs. 116, 120 and 122. In a number of roll designs the springs are carried at the opposite end, pressure from the movable roll being communicated to them by tie rods. See Fig. 123. Whichever mode is adopted, some simple and effective means must be used to prevent chatter. If a tie rod connects the springs and the movable roll, the space between the fixed and the movable pedestals can be filled in with

U-shaped shims, which slip over the tie rod and this will prevent the roll faces from striking one another. Pressure upon the springs must be brought

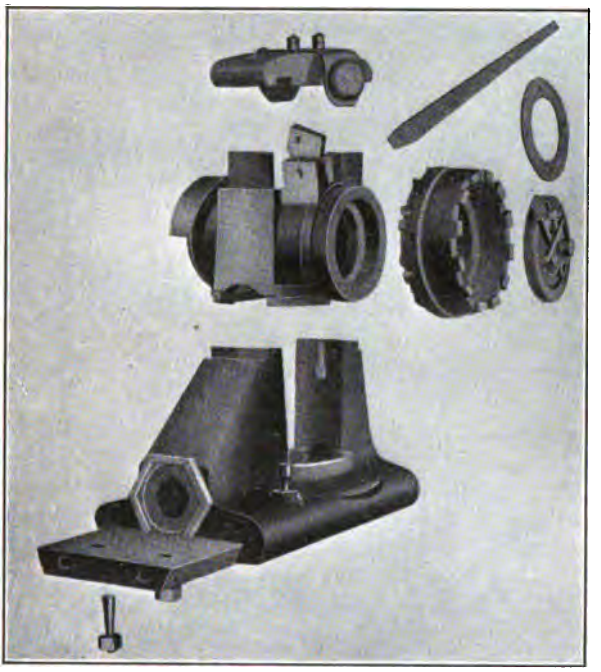

FIG. 118.

about by rods acting either in tension or compression, and it would seem a simple matter where compression rods are used to have a bolt mounted on

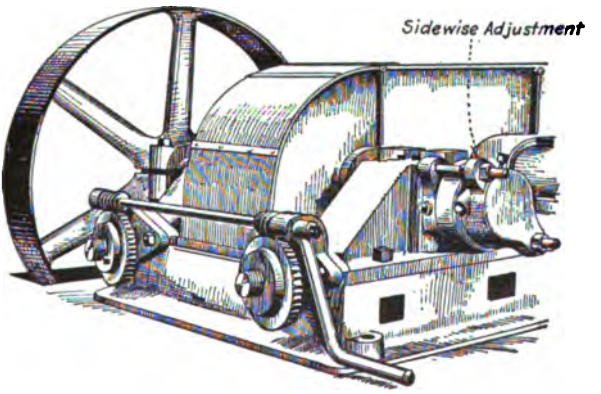

FIG. 119.

the compression rod to strike against a fixed post, so that the movable shell can go no further when the nut reaches the post, but such a nut could not

be kept tight and its purpose would be defeated. Where tension rods are used to transmit the pressure to the springs, the tension rod nut which presses against the springs must be of special design, so that it will not turn under the vibration of crushing. A form used by Allis Chalmers in

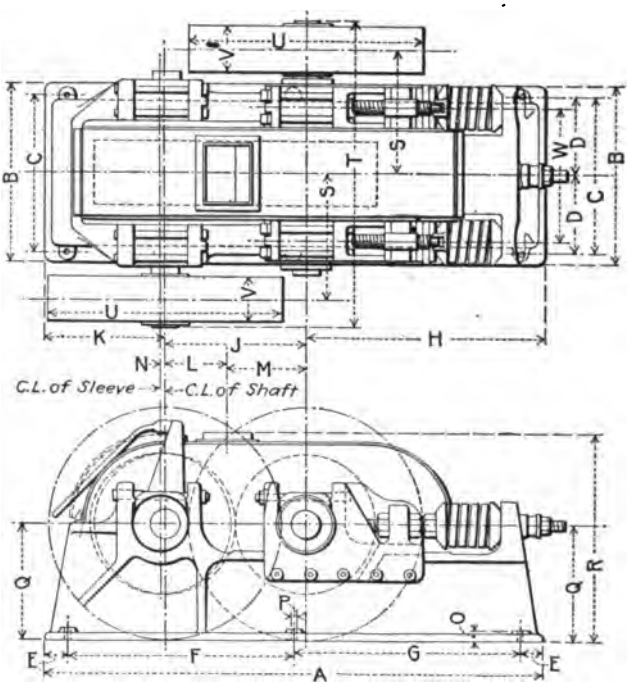

Size of Rolls	A	B	C	D	E	F	G	H	J	K	L
12"x20"	6'7½"	2'7"	2'4"	14"	3"	36¾"	36¾"	33⅛"	20"	20⅛"	8¾"
14"x27"	8'2½"	3'2"	2'10"	17"	4¼"	3'9"	3'9"	3'10¾"	27"	24¾"	12"
16"x36"	10'7½"	3'9½"	3'4"	20"	5¾"	4'10"	4'10"	5'1"	3'0"	2'6½"	16"

Size of Rolls	M	N	O	P	Q	R	S	T	U	V	W
12"x20"	11¼"	1⅝"	2"	1"	20"	2'11"	24½"	4'10"	48"	8"	2'1¾"
14"x27"	15"	1"	2"	1¼"	2'0"	3'7⅞"	2'6"	5'11"	54"	10"	2'6"
16"x36"	20"	1"	3"	1½"	2'6"	4'5¾"	2'8"	6'6"	72"	12"	2'10"

FIG. 120.

their type A rolls is shown in Fig. 117. The plate *A* is the rear member of the nest of springs. In some rolls the tie-rod nuts are provided with worm wheels, and a cross shaft with worms engages the worm wheels; the cross shaft is turned by various devices such as a lever and ratchet. By thus

connecting up the two sides of the roll the movable roll can be drawn up uniformly toward the fixed roll. The worm gear has the further advantage that it cannot come loose. See Figs. 113 and 119. Prevention of chatter is a very important point, and the roll buyers should see that adequate means have been adopted for preventing it.

The springs are always nested and tightly held together by bolts which are independent of the tie-rod bolts, and the crushing pressure is always available no matter how light the load is upon the rolls. The nest must, of course, be tightly compressed by the nest bolt before a crushing pressure is obtained. Some means must be provided for adjusting the rolls sidewise. This adjustment unless provided for by thrust collars is usually placed on the fixed roll or the free ends of both rolls. Simple collars provide an excellent mode of making sidewise adjustment. The Allis Chalmers Class A roll adjustment consists of a ring, which screws on the end of the bearing. This ring has an internal circular stop. The shaft has a collar which is shrunk on the end. This collar rests against the stop on one side and on the other against a plate which screws in the ring. By turning the ring and plate in different direction the shaft can be forced in either direction through the bearings. Means are

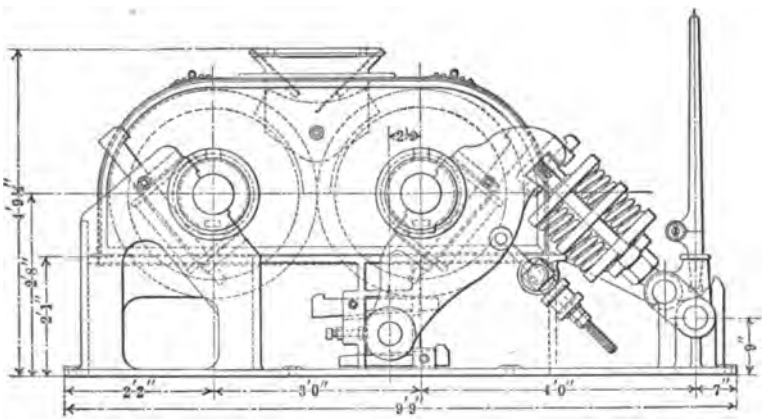

FIG. 121.

provided for preventing the screws from turning under vibration. See Fig. 118. On a number of rolls a groove is cut in the end of the shaft and a babbitted stationary split thrust bearing fits into this groove. The thrust bearing is attached to the roll bearing by two bolts, and by screwing in and out on these bolts the shaft will be pushed through or drawn out through the bearings. Fig. 119.

Owing to the liability of rolls to choke unexpectedly, some makers provide a quick opening device by which the rolls can be thrown wide open in an instant. The rolls manufactured by the Mine and Smelter Supply Company have one pair of bearings mounted in cam frames, and by aid of a lever actu-

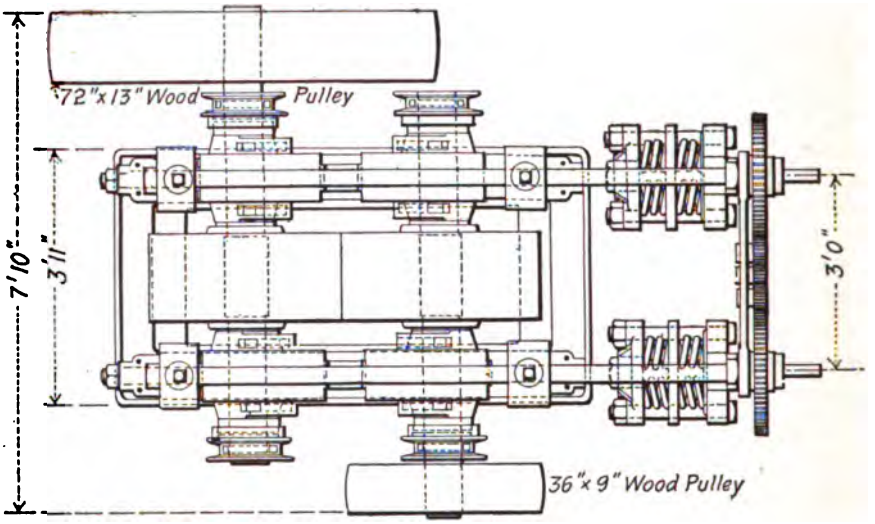

Plan.

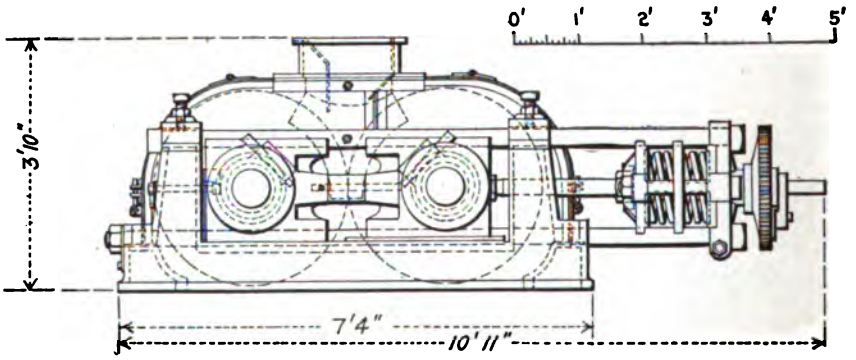

Side Elevation.

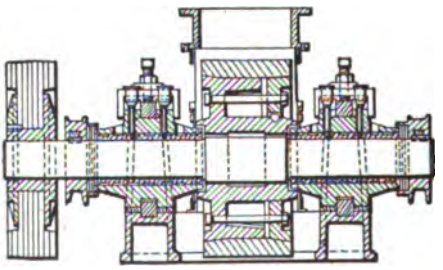

Cross Section.

FIG. 122.[1]

[1] Colorado Iron Work, Portland Type.

ated by gearing the shells can be very quickly thrown open. See Figs. 116 and 120. The Humphrey roll, which is of the same type as the Reliance roll, has a toggle arrangement below the springs, and the mode of quickly throwing back the movable shell will be apparent from Fig. 121. In one design of Chalmers & Williams Class A rolls, the tension rods had high pitched threads and by a device for throwing the tension rod nuts back at the same rate, the mechanism geared together, the shells could be quickly opened.

The life of roll shells, cheek plates, liners, etc., is shown in great detail in Richard's "Ore Dressing". On consulting this authority it will be seen that wear varies according to tonnage, resistance of the rock to crushing, kind of wearing metal and other facts of a minor kind, some of which, such as the degree of care and skill given rolls, cannot be shown in a table. The table shows a life ranging from less than a month to years. The only course for the millman to pursue is to begin in the case of roll shells with the cheaper metals, such as chilled iron for the No. 1 rolls, and Midvale and the Latrobe steel for the other, keeping careful records of their weight when new and worn, the time they are in service, the tonnage they have crushed, and from these figures determine the metal consumption from per ton of ore crushed, or the

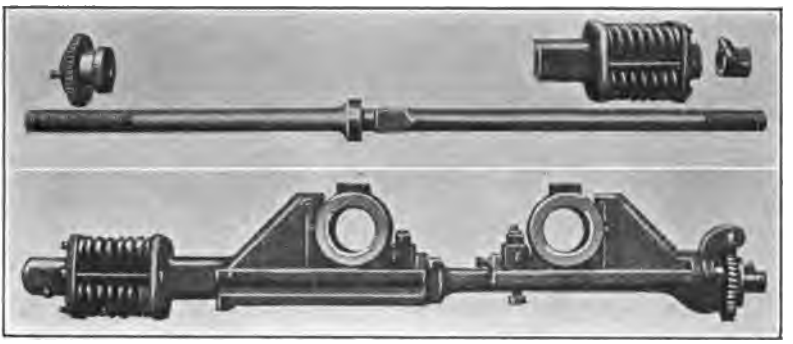

FIG. 123.

cost with these cheaper metals per ton crushed. After this is done if the ore seems to offer difficulty in crushing and the consumption of iron and soft steel, etc., high-grade steels may be tried, such as chrome and manganese, similar records being kept to determine the cost of crushing with these special metals. If the cost is greater with these special steels, ordinarily their use will not be warranted. There are, however, other facts in this problem which may justify the millman in using expensive steels in lower shells, such as the great freedom from shutdowns, due to their greater life. Considerations of this kind should be taken into account before deciding in any particular crushing problem which is the best wearing material to use.

For good work rolls must receive skilled attention when they need it. They should be operated at all times parallel and with the shells neither to

one side or the other of their proper position. All parts must be kept tight and a sufficient pressure be placed upon the springs to do the work of crushing, and prevent any lost motion. A simple means of getting a heavy spring pressure is to tighten up on the large nuts with a long handled spanner wrench as much as possible, and then while one attendant drops pieces of rock in the rolls, another managing the wrench can obtain an additional fraction of a turn of the nut at each shock of crushing. On the proper compression being obtained, the nest bolts can be tightened to hold it. Flanging ought never to occur on rolls, but if it does, and if it is not too heavy, the flanges can be chipped off with a hammer or cut away with an emery or carborundum block. Corrugations cannot be avoided but they should not be allowed to proceed to a point where the work of the roll is impaired. The only really efficacious way of removing them is by a lathe. Where there are a number of rolls of the same size and make, but crushing down from different limits of size, it will be possible to change the shells doing fine work after they have become

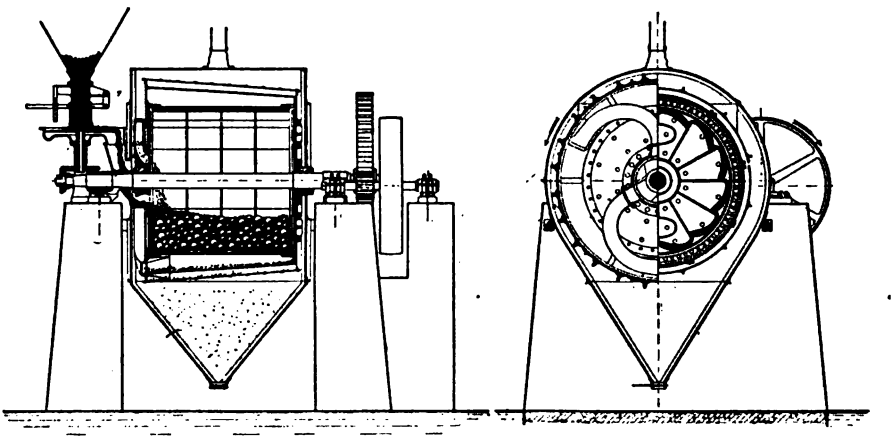

FIG. 124.

corrugated to the machines crushing coarser material, and this procedure will effect some saving in the cost per shell. The use of a lathe in cutting off corrugations will cause but little delay by shutdown if proper preparations are made to this end, in preparing the crushing plant designs. As indicated under the crushing plant chapter, carborundum or emery blocks for cutting corrugations are not effective.

Ball Mills.—For dry crushing and for performing the whole range of crushing from 2-in. size down to 20-mesh, ball mills are preferred by many. Whatever their shortcomings in point of power consumption, they deliver a finished product by the use of a single machine. The Smidth Kominuter is shown in Fig. 124. It is made in three standard sizes: No. 53–1/2 requiring 20 h.p. and having a minimum ball charge of 3000 lb.; No. 66 requiring 45 h.p. and having a minimum ball charge of 6000 lb. and No. 85 requiring

75 h.p. and having a minimum ball charge of 10,000 lb. The capacities per hour are respectively 2–3 tons, 4–6 tons and 10–15 tons. At the Golden Cycle mill these machines (No. 66) had a capacity of 17,000 lb. an hour being fed with a product which had been reduced by rolls to pass a 1–1/2-in. opening. The opening in the screen of the Kominuter was a slot 5/32 by 1/2 in. and gave a product varying from 1/8 in. cubes to the finest slime. The consumption of power was 50 h.p. at a speed of 22 r.p.m. The consumption of 5 in. forged steel balls weighing about 19.5 lb. each was twelve per day. The three sizes require the following floor space: No. 53–1/2, 13 ft. 9 in. by 11 ft.; No. 66, 15 ft. by 13 ft. 9 in., and the No. 85, 14 ft. 9 in. by 18 ft. 10 in. Ball mills are provided with chilled metal liners in which there are slots to allow the crushed ore to pass through. Encircling the liners are the screens to the mesh of which the ore must be broken before passing out of the mill. The liners receive the wear of crushing and protect the screens from abrasion.

CHAPTER VIII

MEANS FOR RAISING ORE OR ORE AND WATER

The means which can be employed for raising ore and water are bucket elevators, sand wheels and pumps, centrifugal pumps and air lifts. The device most commonly used is the belt and bucket elevator. The machine originated in the flour mill business and the forms and arrangements found best in that industry were at first employed in ore milling and are even today proposed by the unthinking for the far more severe service of ore mill work. Belt and bucket elevators seem first to have been used by the early American millwright, Oliver Evans, 1755 to 1817, and a foot-driven device is described in his "Young Millwrights and Miller's Guide (1795)." The raising of material by buckets fastened to chains or bands dates back to a much earlier period than this. Thus Agricola describes a number of forms of chain pumps, endless chains with buckets of various form secured to them at regular intervals. Bucket elevators are a much maligned device, the general impression being that they cause as much trouble as any machine about the mill. Dry elevators cause fewer shutdowns than wet, that is, elevators raising ore and water, other things being equal. Long elevators give more trouble than short, other things being equal. The period the elevator is shut down is directly proportional to the percentage load which each bucket bears to their maximum load. The larger the rock the greater the wear and tear. Where the elevator is overloaded with large rock, the life of the belt and buckets is very short. If possible nothing over 2-in. size should be elevated with belt and bucket elevators. It will generally be possible to avoid elevation until the ore is crushed to less than 2 in., and this should be done. For elevation of material coarser than 2 in. the metallurgist should turn toward conveyers. As an example of the difference the size of rock, coupled with overloading, will make in the wear and tear of elevators, I will cite one of my own experiences with two elevators in the same mill raising ore and water. The two elevators were practically identical in height, design of housing, size of belt and buckets, etc. The first elevator raised all it could handle and received rock crushed to 1–1/2 in. The second elevator was loaded to about 50 per cent. of the safe capacity of the buckets. In the first case, the life of the belt did not exceed six months, and four months would represent the average, and during this period stoppages for replacing worn buckets were frequent. Both elevators were fed so that they had to scoop their feed from the boot, and most of the bucket wear was consequently on the front edge and as in the first case, the buckets were always full, to prevent stalling or overloading in the boot, they had to be removed from the belt before they

were worn down to an extent materially reducing capacity. The wear on the buckets of the second elevator was very slight. The belt in this elevator would not last until it was taken down, owing to the unsound condition of the rubber, a period of two years or more, and the buckets did not need replacement until the belt was taken down. At that time the belt would have become swollen to twice its normal thickness, owing to the rubber losing its elasticity and permitting the cotton to swell by the invasion of water.

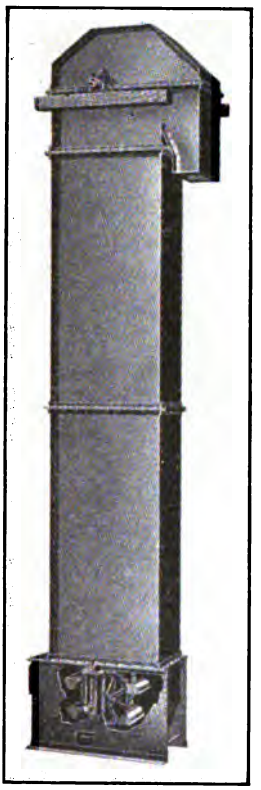

FIG. 125.

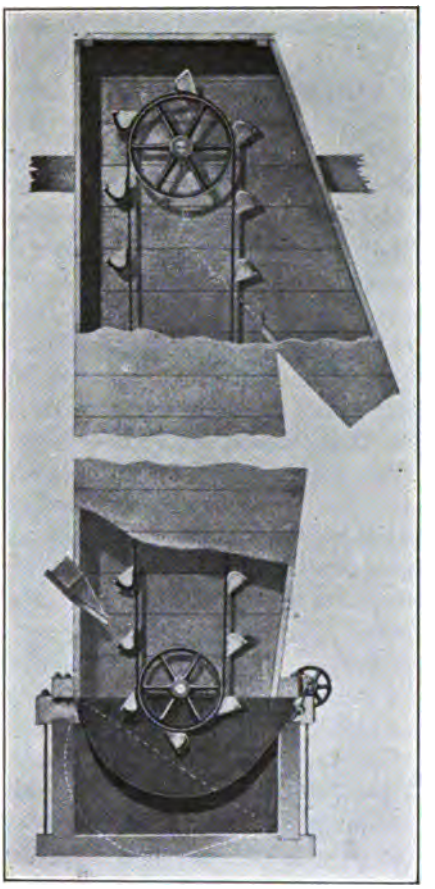

FIG. 126.

Although the service to which bucket elevator is put is often severe, much can be done by good designing to reduce the wear and tear to a minimum. Elevator design was handed over to the ore milling business from its employment in grain elevation, and as the designs in that industry still influence those of ore mill elevators, it will be well to consider how far grain elevators can be applied in ore mill work. Fig. 125 shows a typical grain elevator with a single leg steel housing and Fig. 126 shows a wooden elevator housing

having practically the same outline. Designs of these kinds are proposed for all the varying conditions of ore mill use. There is practically no wear on a grain elevator; no grit to destroy bearings, and no sudden and destructive shocks tending to break the head shafts, or throw the belt off the crown of the pulley, or cause it to come in contact with the front or rear wall of the housing; or in other words there are no special problems in the design of grain elevators, and once they are properly installed, they should be the most harmless machines about the floor mill or grain elevator. So smoothly do these machines operate, that it is perfectly possible and very common to have a double leg form, the belt going up in one leg, and returning down the other.

Belt Take-up Boxes.—After the belt has become thoroughly stretched from service, that is from the driving and initial tension placed upon it when the belt is put in place, and from the weight of the belt and buckets, little or no further service will be required for the take-up boxes shown in Fig. 125. It will be shown later that it is better in feeding coarse ore, or coarse ore and water, to bring the feeding stream to a point facing the buckets, and at a distance above the center of the boot pulley not less than a bucket spacing. If take-up boxes are used for ore elevators, they mean a loss of head room for the boot must be carried down sufficiently below the spout so as to accommodate the boot pulley, belt and buckets when the take-up boxes are in their lowest position. When elevating coarse, dry ore, a considerable space is left below the buckets when the take-up boxes are in their upper position and this space fills up with material of little mobility, and of too great depth of mass to be readily moved by the elevator buckets; consequently stoppages due to choking in the boot are to be expected when using take-up boxes. In looking at the designs shown in the illustrations it will be noticed that the center of the bottom or boot pulley is vertically under the center of the top or head pulley. As compared with the housings to be described later on, this arrangement of centers is cheaper and more compact, but taken in connection with the take-up bearings it causes a condition requiring constant attention. The boot pulley has a very small function in an elevator, for all the weight of the buckets, belt and load is on the upper pulley, and all the driving is done at this position. With the vertical arrangement of centers, and feeding materials directly into the buckets, it is possible to conceive of the boot pulley being dispensed with entirely, and yet the elevator being capable of raising material. But owing to the shock of intermittent feeding, if nothing else, the boot pulley must be put in to keep the belt steady and permit of means being taken of placing a tension on the belt to assist in preventing it slipping on the crown of the head pulley. With the take-up boxes and vertical arrangement of centers, it will be seen that the moment stretching has proceeded to the point where the belt leaves the crown of the boot pulley, ore will lodge between the belt and the pulley. It is impossible to prevent ore from building up along the sides of the boot, whether from spillage when the ore is fed by front feeding, or where in boot feeding, the ore accumulates directly along

the sides of the boot. It is common experience that the moment the belt leaves the boot pulley ore lodges between it and the latter, stalling will begin to occur. Stoppages from the use of take-up devices increase with the size of ore fed. With these devices only a comparatively feeble thrust can be obtained, and constant attention will be required in maintaining a proper contact between belt and pulley.

The corrosive and grit-destructive effect on the screw bolts of the take-up is so marked in raising ore and water that these devices cannot be successfully employed in keeping the belt tight. Again, since slots must be cut in the sides of the boot equal to the travel of the bearings, these devices cannot be employed where water is to be raised on account of the leakage. In ore elevation the use of take-up boxes is practically confined to raising finely ground dry ore, a service but little more severe than in raising grain or flour mill products.

Elevator Housings.—Elevator housings are best built of wood, being cheaper, lighter as a whole, or lighter in the individual parts, requiring removal for access to the interior. Wooden housings can be made just as dust- and water-proof as steel housing. The tightly riveted and close housings used in grain elevators are not adapted to ore mill work, owing to their inaccessibility.

The simplest form of housing is comprised of horizontal boards for the sides, and vertical boards for the ends, the sides and ends being secured at the corners by external cleats. The head pulley is supported by bridge trees which are independent of the housing, and the boot pulley is mounted on the timbers of a frame comprising the skeleton of the boot. This type of housing is particularly well adapted to cases where the top pulley center is vertically over that of the boot pulley, giving a housing with vertical sides and ends, and which may be conveniently carried down inside the skeleton frame of the boot. For wet elevators tongue and groove flooring may be substituted for plain boards for the sides. This type of housing can be carried to any desired height. For heavy service and as furnishing all the possible elements for successful operation, I regard the designs shown in Figs. 127, 128, 129, and 130 as being standard. To the best of my belief this type of housing originated in the Coeur d'Alene district of Idaho. The back timbers which entirely support the housing, are usually inclined in Coeur d'Alene practice, the batter being about 1–1/4 in. to the foot. In preparing designs of my own, I usually make these timbers vertical, unless the service is not a severe one. Figs. 127, 128 and 129 show a design for raising ore and water, and Fig. 130 for dry-ore raising. In the first design, the housing proper may be considered as of a suspended type, since the casing boards end at the boot and are secured to 3 × 10-in. cleats, which are framed into the 6 × 8-in. posts, carried down to the sills of the boot. The boot of the wet elevator is more roomy than that of the dry and this is particularly necessary where the elevator is fed by the spout discharging into the

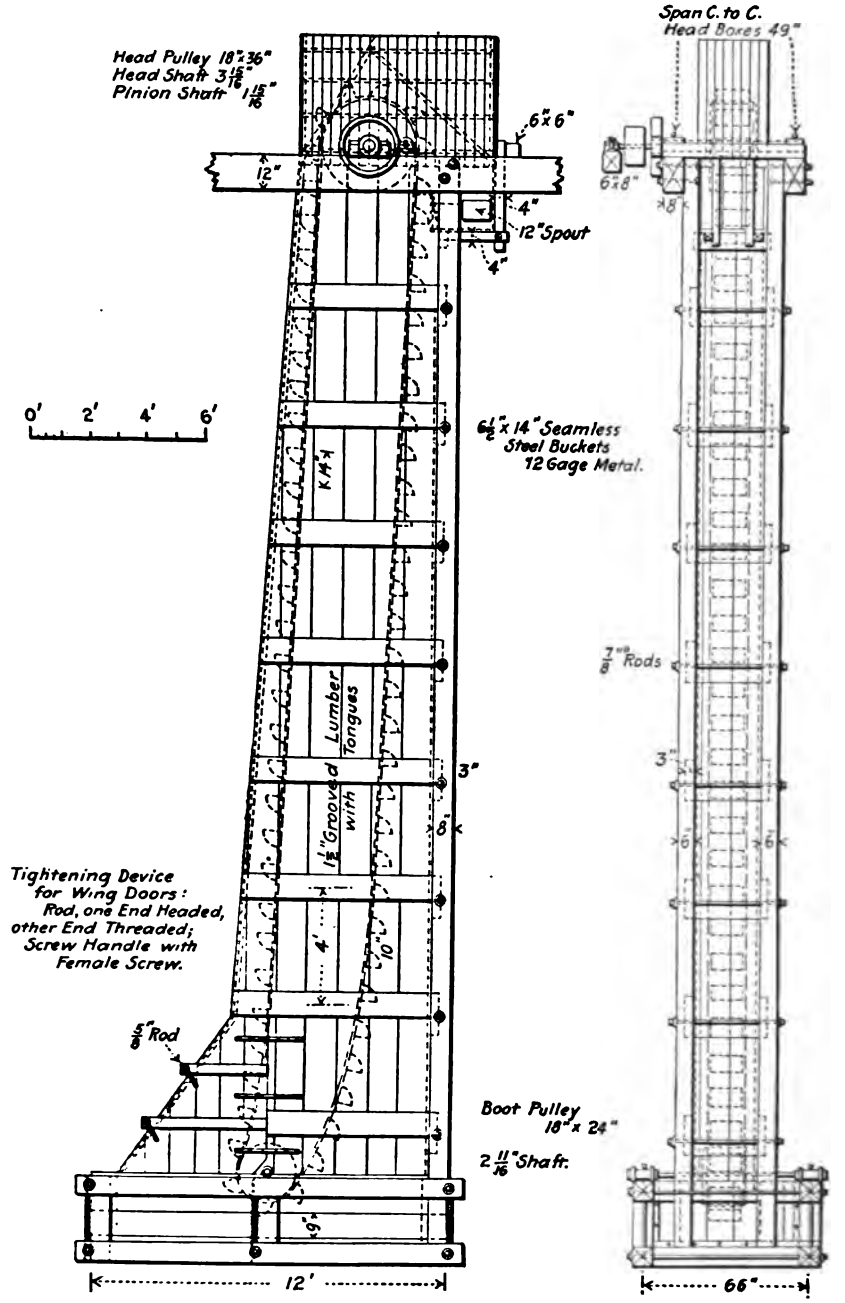
Head Pulley 18"x36"
Head Shaft 3 15/16"
Pinion Shaft 1 15/16"
6"x6"
12"
4"
12"Spout
4"
0' 2' 4' 6'
6½"x14" Seamless Steel Buckets 12 Gage Metal.
K44
Lumber Tongues
1½"Grooved with
3"
8'
Tightening Device for Wing Doors: Rod, one End Headed, other End Threaded; Screw Handle with Female Screw.
4'
10"
⅝"Rod
Boot Pulley 18"x 24"
2 11/16"Shaft.
9"
12'
Side Elevation.
Span C. to C. Head Boxes 49"
6"x8"
8"
⅞"Rods
3"
6"
6"
66"
Rear Elevation.

FIG. 127.

boot instead of its being brought into the elevator in a way that it faces the buckets at the point where it discharges. In the case of the wet elevator, the housing immediately above the boot is extended out so as to prevent scour from the casting up of ore and water by the action of the elevator. This extension is particularly necessary where the elevator is not fed from the front. With front feeding the wing door portion might properly be drawn in and the boot made shorter than shown in the drawings, but this should be done with caution, since there is more or less upcast of ore and water, and the housing should be roomy so that it will not be worn by this action. In elevating dry ore, the boot must be drawn in rather closely around the buckets and pulley, so that an incipient stoppage can be overcome by the buckets setting in motion all the ore in the boot. This permits of the housing being carried down directly into and forming a part of the boot as shown in the figures. The receiver of the dry elevator being shorter, and not so high as that for the wet, can be made in one piece. The dry elevator it will be noticed, has two sets of wing doors. This arises from the fact that the drawing is from an actual design to suit circumstances. The elevator passes through the floor, which is the main floor of a mill. Changing of elevator belts and tightening of the belts can most readily be done from this position, while changes of boot pulleys and clearing out of the boot after stoppages have to be done from foundation floor. The removable slide for access to the boot will be noted. Such a large readily removable section is imperative in dry elevators, which have to be bodily shoveled out after choking. The wet elevator can usually be hosed out around the buckets sufficiently to free them if the elevator becomes stalled. A series of plugs should be provided in the boot of a wet elevator, to allow the water and ore to drain out when clearing the boot. The difference in the size of the belts and buckets of the wet and dry elevators should be noted, the dry elevator usually having a narrower belt and smaller bucket. If the dry elevator be in a closed circuit, excess capacity should be provided. (See Chapter on Rolls.)

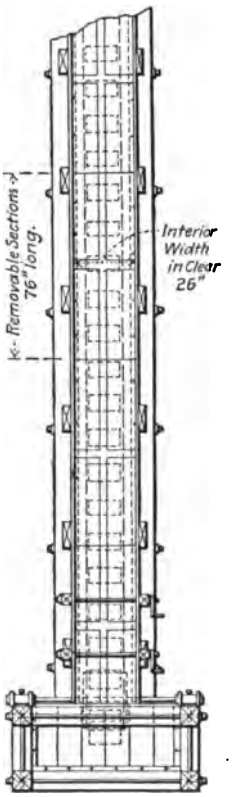

Front Elevation.

FIG. 128.

Feeding Elevators.—Before going on to details of elevators, it will be well to consider the relative merits of front and boot feeding. By front feeding is meant bringing the ore to a height above the boot and to a position facing the belt such that when one bucket has passed the lower edge of the spout, bringing the ore to the elevator, and received its load, there would be at least

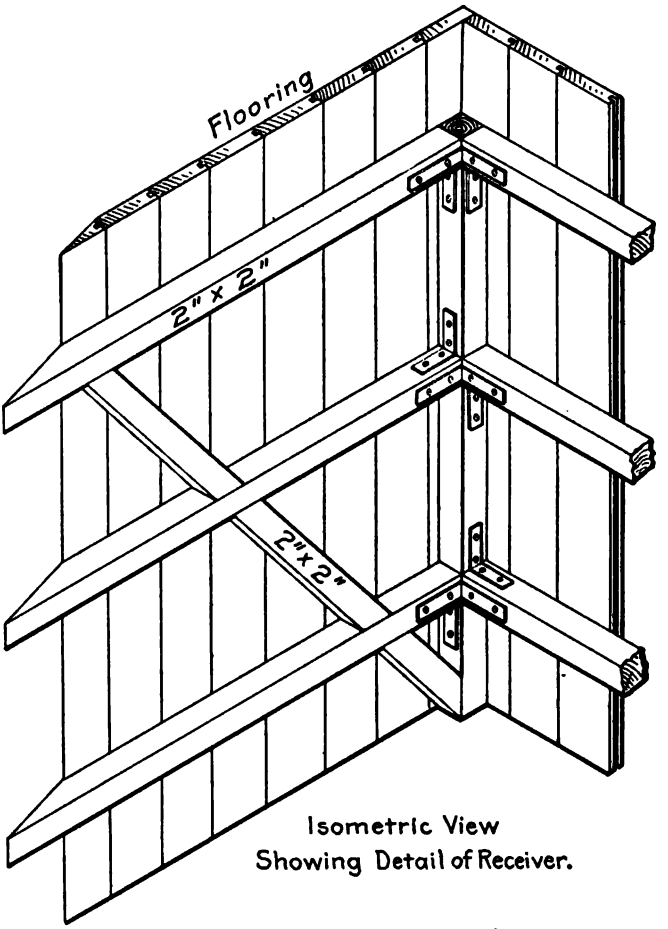

Side Elevation

Vertical Section Showing Grit-proof Collars.

Solid Boot Bearings for $2\frac{11}{16}$" Shaft.

FIG. 129.

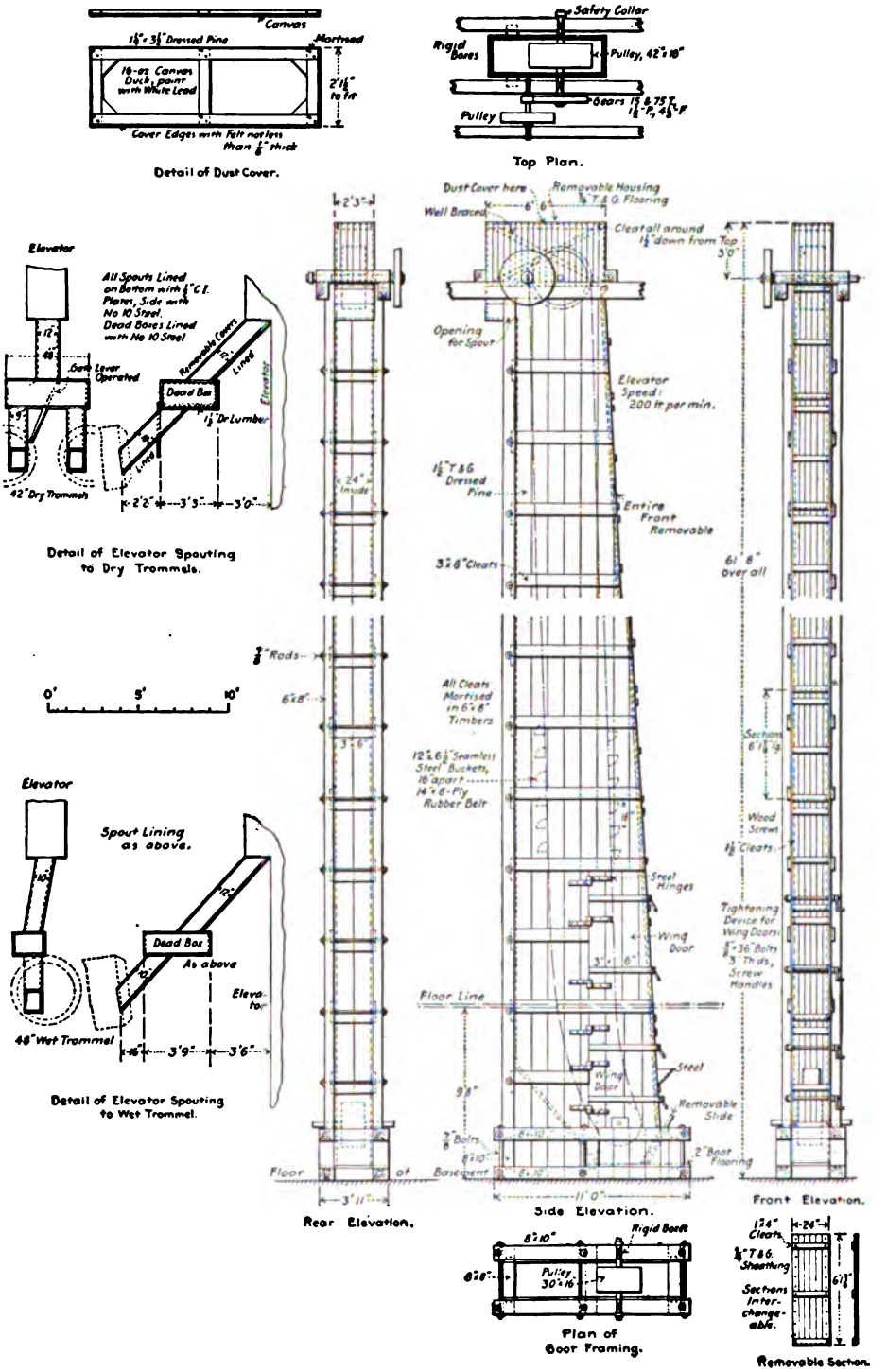
Canvas
Mortised
16-oz Canvas Duck, paint with White Lead
Cover Edges with Felt not less than 1/8" thick
Detail of Dust Cover.
Safety Collar
Rigid Boxes
Pulley, 42"x18"
Pulley
Top Plan.
Elevator
All Spouts Lined on Bottom with 1/4" C.I. Plates, Side with No 10 Steel. Dead Boxes Lined with No 10 Steel
Gate Lever Operated
Removable Covers
Dead Box
Lined
Elevator
1 1/2" Dr Lumber
42" Dry Trommels
Detail of Elevator Spouting to Dry Trommels.
Dust Cover here
Removable Housing
Well Braced
Cleat all around 1 1/2" down from Top
Opening for Spout
Elevator Speed: 200 ft per min.
1 1/2" T & G Dressed Pine
Entire Front Removable
3"x8" Cleats
61' 8" over all
Rods
All Cleats Mortised in 6"x8" Timbers
12"x6 1/2" Seamless Steel Buckets, 16" apart
14"x8-Ply Rubber Belt
Sections
Wood Screws
1 1/2" Cleats
Steel Hinges
Wing Door
Tightening Device for Wing Doors
Floor Line
Steel
Removable Slide
2" Boot Flooring
Floor of Basement
Rear Elevation.
Side Elevation.
Front Elevation.
Elevator
Spout Lining as above.
Dead Box
As above
Elevator
48" Wet Trommel
Detail of Elevator Spouting to Wet Trommel.
Rigid Boxes
Pulley 30"x16"
Plan of Boot Framing.
Sections Interchangeable.
Removable Section.

FIG. 130.

one bucket below which has passed the arc of contact of the belt with the boot pulley. No more loss of head room than the regular bucket spacing need be incurred other than that required in turning the spouting so as to bring it into the facing position, and the loss of head room due to giving the spouting sufficient slope so that material will flow in it. It will be found that the loss of head room from these last two considerations is far greater than the loss of head room at the elevator.

Boot feeding consists of bringing the ore from any angle into the boot at any point in front of the boot pulley. It incurs the least loss of head room. The following principles will serve as a guide to the choice of mode of feeding. For feeding dry ore coarser than 1/4 in., front feeding is necessary. For wet and dry feeding of material finer than 1/4 in., boot feeding can generally be most advantageously employed. If there be but a single spout to carry it to the elevator, and this can be pointed directly toward the front of the elevator, it will be more advantageous to use the front feed, particularly if the ore is dry. For feeding ore and water, the ore being coarser than 1/4 in., it will be more advantageous to employ the front feeding, providing this does not cause the placing of the boot in a deep pit, or a serious loss of head room. Boot feeding causes more tendency to choke up, but this is only serious when feeding coarse ore. It causes greater wear on the back of the belt, due to pieces of ore lodging in the belt between this and the pulley. If there is slippage, this will cause longitudinal tears in the belt, and the rubber cover becomes loosened, and after short use can be torn off in long sections. The most destructive tears in the belt are common to either mode of feeding. These occur immediately above the edge of the bucket where it is secured to the belt and are largely due to the pinching of the belt, as the buckets are thrown out on the crown of the head pulley by centrifugal forces when discharging, and also to pinching of the belt when the buckets take their load in the boot.

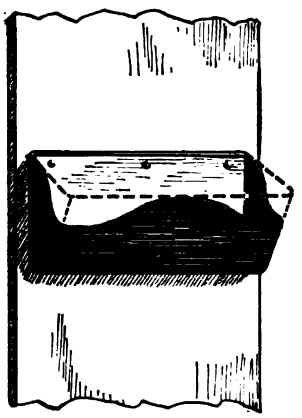

FIG. 131.

In boot feeding the buckets wear down in the typical manner shown in Fig. 131, the attack on the metal being greatest at the front corners. With severe service, this wear proceeds rapidly and soon materially reduces the capacity of the buckets. This action is much faster with wet feeding than dry. In raising sand and water this action is slow and not important. In boot feeding there is in raising ore and water a scouring off of the rubber below the buckets to a depth of one or more plies, but this does not as a rule affect the strength of the belt. In front feeding there is a tendency to wear the front of the belt between buckets, and also to wear holes in the bottom of the buckets. Where the ore is allowed to rush into the elevator from a

high angled spout, such wear, particularly that of the buckets is severe, but by employing dead boxes much of it can be obviated.

Elevator Hoods and Receivers.—An eye should be secured to a timber above the center of the head pulley for removing broken shafts or loosened head pulleys, occurrences of some frequency even in well-designed elevators. For elevators raising ore and water the hood or covering for the top pulleys should be left open at top. If a bucket has fallen off the belt the hiatus in the regular beat of the discharging material is distinctly noticeable. The riding of the belt to one side or the other of the head pulley, or loosened buckets striking on the receiver iron, can only be detected by being able conveniently to see and hear what is going on in the receiver. The lightest wooden cover cannot be conveniently handled by the foreman in making his rounds and in removing it, there is danger of its falling into the receiver, and in use such a cover, even if hinged, becomes water-logged, heavy and difficult to raise. Even if the cover be in hinged sections avoidance of the duty of inspection will be more marked than if there were no cover at all. For dry elevators where an open receiver would be a nuisance on account of the dust, covers consisting of a light frame covered with painted canvas can be employed, and these can be made in one or more hinged sections, if desired, making them more convenient to handle than a cover consisting of a single frame. Following the rules for belt travel which will be given later, the receiver of wet elevators should rise above the center of the head pulley 1–1/4 times its diameter. For example, an elevator with a 48-in. head pulley will necessitate a receiver 60 in. high. For inspecting the interior of the receiver a place to stand should be built on the end at which the belt comes up, provided the receiver is too high to look into conveniently from the platform at the level of the bearing.

There is sometimes an inconvenient spray arising from the top of a wet elevator while in operation, and this can be prevented by two short lengths of board from 12 to 16 in. long, spanning the receiver in the center and resting on two sets of cleats, one pair above the other, so that at will the covered space can be made as much as the length of the two boards or as short as one.

In wet elevators the receiver edge should touch a point in a horizontal line passing through the lowest point of the crown of the head pulley. With belt speeds proportioned to the diameter of the head pulley this rule will be found to give all the drop necessary to insure that all the ore leaves the buckets. In dry elevation the receiver edge can be located by the following rule: Construct a circle of one-half the diameter of the head pulley and with the same center. Draw a 45-deg. tangent to this circle on its lower side, the edge of the receiver will be on this tangent line. It has been recommended to have the receiver edge as low as some point on the 45-deg. tangent line to the lower side of the head pulley when raising dry material; but there seems no reason for this rule unless the belt travel is very small, less than 200 ft. per minute for pulleys of medium size; however, since the receiver of a

dry elevator is but an enlargement of a high-angle spout, such a procedure would entail but little loss in head room. High speed in dry elevators is usually not desirable, as it will wear out the forward end of the receiver, cause dust, and give more capacity than is necessary. At 200 ft. per minute there is more than enough centrifugal force to cause the material discharging from the buckets to advance horizontally a distance equal to the width of the buckets by the time they have reached the horizontal center line on their downward trip. The clearance of the receiver edge should not exceed one-half inch either for wet or dry elevators.

The edge of the outgoing spout from the receiver of a wet elevator should be raised from 3 to 9 in. above the bottom of the receiver so as to permit a protective layer of ore to accumulate. The width of the receiver for either wet or dry elevation will of course be the width of the housing, and this should be as small as possible so as to reduce the span of the head pulley shaft between bearings. If the clearance of the head pulley be made one-quarter of the width of its face, the interior of the housing will be found sufficiently wide for conveniently making repairs. With a head pulley of 16-in. face the interior width of the housing under this rule will become 24 in., and this fixes the width of the receiver. In wet elevation the length of the receiver should be about two-thirds the diameter of the head pulley. For dry elevators the length of the receiver will be approximately the width of horizontal section of the spout leading from it. In wet elevation the receiver should project into the housing a few inches so that any material failing to discharge into the receiver will not cause wear by running down the back of the housing but will fall clear into the boot.

Elevator Shaft and Pulleys.—The size of shafts is one which cannot be determined from the rules for proportioning shafting for beam loading effect and torsion because of the shocks to which the head shaft is subjected. The span of the head shaft should be as small as possible, and to this end the bridge trees should be drawn in to the sides of the housing. Some examples will be given for good proportions of a shaft. For an elevator of 50- to 60-ft. vertical lift, 20 × 48-in. head pulley, 8 × 18-in. *AA* malleable iron buckets loaded to 60 per cent. capacity, and an 18-in. ten-ply belt, a 4–15/16-in. head shaft is required if it be provided with a keyway. If the pulley is forced on the shaft, the hub being reinforced by shrunk-on bands, which is the better practice, the diameter may be reduced to 4–3/16 in. For an elevator of 20 ft. vertical lift, 14 × 30-in. head pulley, light steel buckets, and 12-in. 6-ply belt, the head shaft need not be of greater diameter than 2–11/16 in. The first case would represent the extreme of height, weight of belt and load, etc., and very severe service; while the second would represent low lift, light details and load, and very little or no shock. The size of the head pulley will be largely determined by the capacity desired, because the belt-travel in wet elevation must be proportioned to the diameter of the head pulley. Too small a head pulley will wear the belt more rapidly than necessary. The

boot pulley can be two-thirds the diameter of the head pulley, but the diameter of the boot pulley should never be less than 24 in. for a mill elevator. If boot feeding is employed, the boot pulley should be made with extra thick rim and the arms be extra heavy where they merge into the rim. The head pulley should have a double set of arms where the lift and load is great, and the hub should be of a width nearly equal to that of the face.

Where the elevator raises ore and water the rule which I follow for the width of boot is to make it 2–1/4 times that of the housing proper. This allows for arranging the bearings at a distance from the belt to prevent the entry of grit into them, and where boot feeding of ore and water is adopted, the large boot will assist in bringing the ore to rest quickly and help to stop the scour. Where front feeding is adopted the boot may be of less width and diminishing in width in proportion as the size of ore fed diminishes. The length of the boot will depend upon the length of the housing at the boot, and this, in turn, upon the degree of inclination of the line passing through the centers of the head pulleys.

The reason for advancing the head pulley to a position in front of the boot pulley, as is shown in Figs. 127 and 130, is to secure good contact of the belt with the boot pulley as the belt stretches. It has been found by experience that if the center of the head pulley be advanced from the center vertical line of the boot pulley, and in the direction that the ore discharges—a distance equal to the diameter of the head pulley, then a satisfactory and automatic take-up of the slack will be obtained. After the belt is first put upon the pulleys and drawn up with belt clamps, with a final tension on the boot pulley of not more than one ton, it will have to stretch until this tension is overcome, and will not change its arc of contact on the boot pulley during this time. After this period further slacking of the belt will for some time merely cause the arc of contact to shift. When the belt finally falls away from the boot pulley sufficiently to cause slipping, the clamps can again be put on and a 12 to 24-in. section cut off the belt. For an elevator of 60-ft. lift and 48-in. head pulley the angle made by the centers of the two pulleys, top and bottom, with the vertical is about 3 deg. 49 min.; for a 20-ft. lift and 30-in. head pulley the angle is 11 deg. 18 min. Where the lift is small and the service not severe, as, for example, in raising sand, or sand and water, there would be no objection to inclining the vertical timbers supporting the housing. This will cause more wear, but as the material is fine the cutting effect will not be very great, and a material saving in lumber will be effected. It will be noticed that the housing shown in the figures is perfectly adapted to changes of this kind; that is, if the housing is inclined it must be supported by timbers at the back, and the design provides for this plan.

Elevator Speed.—The proper speed of belt in a wet elevator is very important. Many dicta have been given out as to the proper speed of belts which apparently bear out the results of theory and experience, although

very little proof of either has been clearly presented by any writer on the subject. It may be stated at once that a complete mathematical discussion of the actions taking place at the top of an elevator, causing discharge, is too formidable for presentation in a work on applied engineering, and such results would not be of practical value for they would not tally with experience. The only principle which can be laid down is that the larger the head pulley the greater must be the belt speed.

I will endeavor in the ensuing paragraphs to deduce some formulæ which will serve to make the nature of the problem clear. These formulæ are based on the action of a single particle, for no satisfactory assumptions can be made when a mass of ore and water is considered. Referring to the diagram, P is a pulley of radius r. F is a frictionless plane of any indefinite length secured normally to the pulley, and p is a particle in contact with the plane. In order to see the effect of centrifugal force alone, the pulley may be conceived to revolve horizontally in contact with a frictionless plane, the particle being also in contact with this plane as well as making the contact mentioned. It is further to be assumed that pulley P is revolving with a peripheral velocity V, and p is at the beginning of the consideration of the problem at the point shown in Fig. 132, the problem being to determine its path under the rotation of the pulley. In the differential equation $\frac{d^2\rho}{dt^2} = \omega^2\rho$ the left-hand expression is the ordinary one for acceleration. If ω = angular velocity $= \frac{V}{\rho}$ then since the acceleration due to centrifugal force is $\frac{V^2}{\rho}$ and $V = w\rho$, $\frac{V^2}{\rho} = \frac{\omega^2\rho^2}{\rho} = \omega^2\rho$, the right-hand expression. On integrating this equation the value of ρ becomes r cosh α; that is, the path of the curve is independent of the velocity of rotation of a pulley of any particular size, and depends only on the diameter of the pulley and the angle

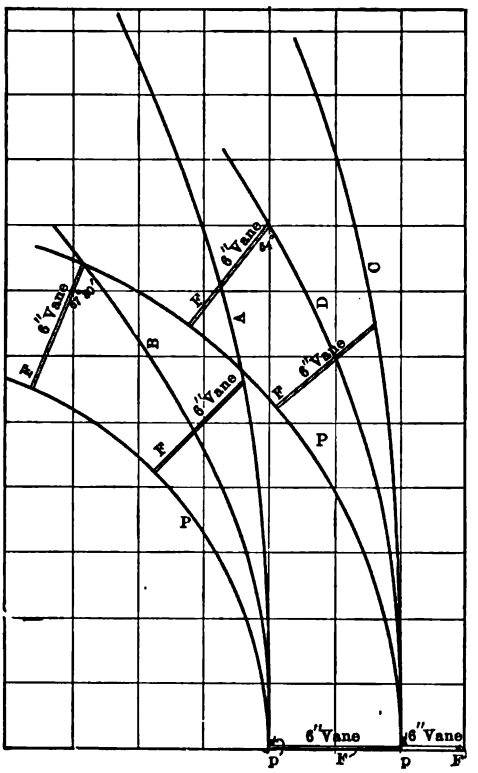

FIG. 132.

through which it has advanced. It will also be evident that the various curves for pulleys of different diameter are symmetrical. In Fig. 123 the curves have been platted for pulleys of 36- and 48-in. diameter (curves *A* and *C*). In considering the effect of gravitation the pulley will have to be conceived to be returned into the vertical position when it will be evident that the downward effect of gravity will reduce ρ by an amount equal to $\frac{gt^2 \sin \alpha}{2}$, or $\rho = r \cosh \alpha - \frac{gt^2 \sin \alpha}{2}$.[1] Now the sole practical condition for discharge is that the particle shall land ahead of the pulley on a horizontal line passing through the center and at a distance along this line at least equal to the semi-diameter of the pulley plus the thickness of the belt, the width of a bucket, the spacing between the bucket and the receiver iron and the width of the receiver iron. For the present purpose the frictionless plane *F* can be considered as limited to length *l* equal to the thickness of the belt plus the width of an elevator bucket, or plane *F* can be regarded as a simple form of elevator bucket. The first problem will be to consider at what point the particle *p* leaves bucket *B*, and what is the angle made by the tangent to the curve at the point of emergence and its tangential velocity at the point of emergence. The tangent to the curve gives the directrix of the ensuing parabolic path, and with the initial velocity furnishes the information for determining at what point on the horizontal line passing through the center of the pulley the particle passes through it. From the theory elaborated it is found that the peripheral velocity of the pulley must be proportional to its diameter. Now if the vane be inclined to the normal, an angle γ, then it must be evident that ρ for any angle α must be less than in the cases considered, and discharge takes place at a point higher upon the crown of the pulley, the directrix of the ensuing parabola is flatter, and the particle falls nearer to the pulley, or if the rate of rotation be sufficiently low, falls upon the pulley and does not reach the receiver; consequently a wide shallow bucket gives the greatest freedom of discharge, whereas, a deep narrow bucket will retard discharge. In one case, the bucket has little capacity, but discharges freely; in the other case it has much capacity but discharge is retarded. The effect of friction has been neglected. So far as the weight of the particle is to be considered, it will be evident that the friction diminishes from the zero position when it is a maximum to zero at the 90-deg. position. The pressure produced on the bucket by the particle from its reaction to the forces acting upon it and the increase of friction due to this pressure can be obtained by finding the resultant force acting upon the particle at any point, and from this finding the value of the normal component at this point. The value of this normal component must increase as *V* increases, but since the centrifugal force and velocity also increase in proportion, the retarding effect is constant for all speeds.

[1] See Curves *B* and *D*.

The practical rule for belt travel I use for wet elevator is D times 100+100, where D is the diameter in feet. For a 36-in. pulley, this would be 400 ft. per minute or 42 r.p.m. For a 48-in. pulley, 500 ft. per minute, or 40 r.p.m.

An elevator which has insufficient belt speed has a characteristic discharge. The loads of each bucket visibly rise out of them separately and appear to lag behind the bucket from which they came. In an overloaded elevator there will sometimes be found a curious selective action in favor of the raising of ore. At the start of operations, ore to water in the ratio entering the boot will be elevated. Gradually, however, the quantity of water raised diminishes until finally the buckets arrive at the receiver filled with a packed mass of ore. If belt speed be too low this action can be explained by considering that the water being less retarded in discharging, will fall entirely into the receiver, while a certain proportion of the ore will fall back into the boot. As the ore in the boot increases under this action, the water will finally overflow the boot, and practically nothing but ore will be raised. Finely ground ore mixed with a limited amount of water will often discharge poorly, particularly if the lift be great and the ore of high specific gravity, such as galena concentrates of sand size, for under these conditions settlement and packing in the bucket takes place. Two remedies may be tried, one to drill fine holes in the bottom of the bucket, causing a downward movement of water through the mass of ore, and preventing the grains from coming sufficiently close together to be much affected by attractive force. The second method, which is more effective, is to point spray pipes upward from points in the receiver so that jets of water can be used to wash out the buckets.

Elevator Belts.—On receiving a new belt, the rubber should be carefully examined. It should be tough, grayish white, and offer considerable resistance to pressure by the thumb. A sliver cut off with the knife should be elastic. Softness and a brownish-black color are evidence of devulcanization. The extra coating of rubber usually provided for elevator belts is of no service if boot feeding is employed, for the coating on the pulley side soon becomes loosened. For severe abrasive wear and front feeding, an extra coating on the bucket side is helpful. The tendency at present is to order belts with standard cover, the thin coating of rubber which gives the finishing surface to ordinary rubber belting. The belt as received at the mill is in a coil securely sewed in burlap. If it is to be put in place at once, a pipe can be pushed through the eye of the coil, and the pipe and belt suspended on a pair of saw horses. Saw horses are set out at regular intervals, on which are placed a line of boards. The belt is then dragged out on the boards, the pipe which serves as a shaft being prevented from advancing by a couple of cleats nailed on the supporting saw horses. When a good length of belt has been laid out, it can be marked with a square and pencil for the bucket spacings. The spacing will be about the width of the belt. With proper belt speed a particle leaving a bucket at the top of the elevator cannot strike the bucket ahead, no matter how close the spacing. Close spacing

is very destructive to the belt, for it increases the number of horizontal tears just above the edge of the bucket. After the belt is laid off with equidistant lines, a bucket edge is placed up to the lines and the position of the holes marked with a pencil. For punching the holes only the best quality of punch should be used. Bemis and Call's punches, especially those with the extra long shanks, are very serviceable. The No. 10 punch is the common size. The operations of marking, punching, placing the bolts and buckets, and screwing up the nuts can be done most rapidly by a number of men working in succession. The nuts are screwed on with the rounded face to the bucket. Before securing the buckets a set should be used to draw the flat head of the bolts up flush with the pulley side of the belt. The nuts can most conveniently be screwed up with a brace of the kind shown in Fig. 133.

For splicing the belt after it has been put in the housing, a butt joint with covering piece is most common, the length of the latter being twice the width of the belt. A liberal number of bolts should be used in this splice.

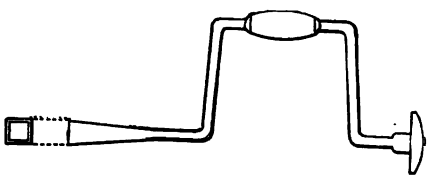

FIG. 133.

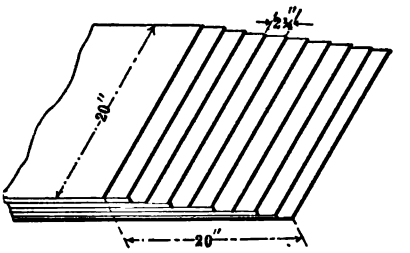

FIG. 134.

Scarf splices of a single character are less commonly used. The scarfing is shown in Fig. 134, each section removed being of one less number than the one ahead of it. The scarf splice offers no advantage over the butt and covering piece splice, and requires more time to prepare. The double scarf would make the neatest junction, but one of the scarfings would have to be cut while the belt is in the clamps in the housing and this would be an awkward task. It is not safe to place a bucket on the covering piece, for fear that it will catch on the edge of the receiver. If an old belt is in the housing it will assist materially in raising the new one, for if the new belt is attached to the old one at the boot, the latter, after being cut, can be used to draw up the new belt, and very little effort will be required, since both up-going and down-coming portions are of the same weight.

If the belt and buckets are being put on the housing for the first time, or a belt has fallen into the boot, or it is desired to replace such a fallen belt by a new one, the wing doors of the elevator can be thrown open and as many of the front removable sections taken off as may be necessary to allow of free passage of the belt upward, and for the hoisting rope. One snatch block should be secured to a permanent eye near the boot of the elevator, which experience has shown to be the best place. Other snatch blocks should

be placed at points so as to lead the ropes to a hand winch. One end of the rope is secured to the belt and the other over the head pulley; the rope is run through the snatch blocks to the winch. Two men will suffice for passing the belt into the housing, or for feeding it, if it lays in the boot, one at the head pulley and a number sufficient to man the winch. When the belt can finally be drawn up from below the boot pulley, clamps are put upon the ends and the screw rods inserted and the belt drawn up tightly. Instead of the rods, two short eyes may be substituted on either side to hold two 1-ton chain blocks. This mode of taking up the slack will be found more expeditious than by employing screw rods. The ordinary power belt clamps will be found entirely inadequate for heavy elevator belts. If more than one width of belting is employed for elevator work, there should be clamps for the different widths made of stout pieces of maple; the screw rods should be heavy, with square machine cut threads, and with similarly cut threads in the nut. The clamps should be recessed to hold the heads of the screw rods, and the square section in the center of the rods should be pierced for vise handles, a device more convenient to use than a wrench. After the slack is taken out, the covering piece can be punched, laid over the butting ends, clamped with wood clamps, and the ends marked through the holes with some red lead in oil. The covering piece can then be removed, the holes punched in the ends of the belt, and the splice bolted together.

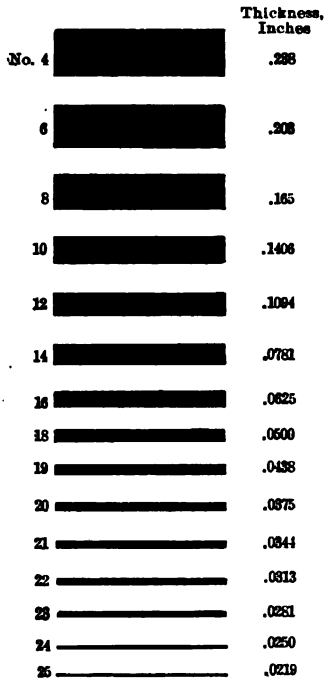

FIG. 135.

Elevator Repairs.—When the elevator is shut down for repairs, the following points should be looked after: The receiver should be examined to see if it needs a new receiving plate; loose buckets should be tightened and worn, distorted or broken buckets should be replaced by new ones. It is a good idea to turn the belt over once and examine each bucket. Patches should be put upon the belt, and the receiver iron moved in to accommodate the extra thickness. Damaged buckets, bolts and other scrap should be removed from the boot.

Elevator Buckets.—Some practical data are given in the accompanying tables to aid in designing. Following the belt rule for speed and the direction for spacing of buckets, conditions can be arranged to suit any desired capacity. Buckets are made of riveted steel, seamless steel and commonly two weights of malleable iron. The *A* form of malleable iron has a plain face and the *A.A.* form a reinforced face. I am firmly of the opinion that

the steel buckets are, everything considered, better than the malleable iron for any service; they are lighter and less destructive to the belt and wear more slowly than the malleable iron buckets. Where buckets are apt to catch on refuse, such as bolts, drill points, or sticks of wood, which lodge in the boot and come from the crushing machine, the malleable iron buckets will be perhaps better because they are more rigid and will not be distorted so readily by being caught by such objects.

DIMENSIONS OF MALLEABLE-IRON ELEVATOR BUCKETS, STYLE A

Length, in.	Width, in.	Depth, in.	Approx. capacity cu. in.	Weight, lb. per 100
10	6	5	160	675
11	6	5	176	690
10	7	5·5	210	735
12	6	5	205	725
14	6	5	235	900
12	7	5·5	260	820
14	7	5·5	310	950
16	7	5·5	360	1100
18	7	5·5	410	1300
12	8	6.5	350	890
14	8	6.5	415	1150
16	8	6.5	480	1275
18	8	6.5	515	1400
18	9	9	710	1850

STYLE AA, EXTRA HEAVY PATTERN, THICK FRONT

Size, in.			Capacity, cu. in.	Weight, lb. per 100	Size, in.			Capacity, cu. in.	Weight, lb. per 100
Len.	Proj.	Depth			Len.	Proj.	Depth		
6	4	3-1/2	42	275	14	7	5-1/2	310	1070
7	4-1/2	4	65	365	16	7	5-1/2	360	1250
8	4	3-1/2	60	375	18	7	5-1/2	410	1450
8	4-1/2	4	75	420	20	7	5-1/2	460	1600
8	5	4	95	475	12	8	6-1/2	350	1200
10	6	5	160	750	14	8	6-1/2	415	1300
11	6	5	176	775	16	8	6-1/2	480	1400
10	7	5-1/2	210	810	18	8	6-1/2	545	1625
12	6	5	205	840	20	8	6-1/2	610	1800
12	7	5-1/2	260	900	18	9	9	710	1900
14	6	5	235	1000	.....	.....	.....	.....	.....

GEARING

	Number of teeth	Width of face, in.	Bore, in.	Hub		Arms
				Width, in.	Diam., in.	
Pinion.....	15	4.0	1-15/16	.....	.....	.....
Gear.....	60	4.0	3-7/16	5-3/4	6-3/4	6
Pinion.....	12	4.0	2-3/16	.....	.....	.....
Gear.....	48	4.0	3-7/16	5-1/4	6-1/2	6
Pinion.....	18	3.0	2-15/16	.....	.....	.....
Gear.....	60	3.0	3-15/16	5	7-3/4	Web

STANDARD STEEL ELEVATOR BUCKETS[1]

Gauges, No. 14 and Heavier

Length across belt	Projection from belt	Gauge	Approx. wt. 100 buckets, lb.	Capacity, cu. in.	Length across belt	Projection from belt	Gauge	Approx. wt. 100 buckets, lb.	Capacity, cu. in.
4	4	14	110	31	12	4-1/2	14	275	146
		12	150				12	388	
4-1/2	4	14	118	35	5	5	14	190	71
		12	162				12	270	
							10	340	
5	4	14	126	39					
		12	174		5-1/2	5	14	200	78
5-1/2	4	14	134	43			12	285	
		12	186				10	360	
					6	5	14	210	86
6	4	14	142	47			12	300	
		12	198				10	380	
6-1/2	4	14	150	50	6-1/2	5	14	220	93
		12	214				12	315	
							10	400	
7	4	14	158	54					
		12	226		7	5	14	230	100
7-1/2	4	14	166	58			12	330	
		12	238				10	420	
					7-1/2	5	14	240	107
8	4	14	174	62			12	345	
		12	250				10	440	
8-1/2	4	14	182	66	8	5	14	250	114
		12	256				12	360	
							10	460	
9	4	14	190	70					
		12	268		9	5	14	270	128
							12	390	
10	4	14	206	78			10	500	
		12	292						
					10	5	14	290	142
11	4	14	222	85			12	420	
		12	316				10	540	
12	4	14	238	93	11	5	14	310	157
		12	340				12	450	
							10	580	
4-1/2	4-1/2	14	140	55					
		12	191		12	5	14	330	171

[1] Adopted in part from the list of the Jeffrey Mfg. Co.

STANDARD STEEL ELEVATOR BUCKETS.—*Continued*
Gauges, No. 14 and Heavier

Length across belt	Projection from belt	Gauge	Approx. wt. 100 buckets, lb.	Capacity, cu. in.	Length across belt	Projection from belt	Gauge	Approx. wt. 100 buckets, lb.	Capacity, cu. in.
							12	480	171
5	4-1/2	14	149	61	12	5	10	620	
		12	204						
					13	5	14	350	185
5-1/2	4-1/2	14	158	67			12	510	
		12	217				10	660	
6	4-1/2	14	167	73	14	5	14	370	199
		12	230				12	540	
							10	700	
6-1/2	4-1/2	14	176	79					
		12	243		15	5	14	390	214
							12	670	
7	4-1/2	14	185	85			10	740	
		12	256						
					16	5	14	410	228
7-1/2	4-1/2	14	194	91			12	600	
		12	269				10	780	
8	4-1/2	14	203	97	5-1/2	5-1/2	14	227	91
		12	282				12	320	
							10	405	
9	4-1/2	14	221	119					
		12	308		6	5-1/2	14	238	99
							12	335	
10	4-1/2	14	239	121			10	425	
		12	334						
					6-1/2	5-1/2	14	249	108
11	4-1/2	14	257	133			12	350	
		12	360				10	445	
7	5-1/2	14	260	116	12	6	12	600	249
		12	365				10	750	
		10	465				8	940	
7-1/2	5-1/2	14	271	124	13	6	14	455	270
		12	380				12	630	
		10	485				10	790	
							8	990	
8	5-1/2	14	282	132					
		12	395		14	6	14	474	290
		10	505				12	660	
							10	830	

STANDARD STEEL ELEVATOR BUCKETS.—*Continued*
Gauges, No. 14 and Heavier

Length across belt	Projection from belt	Gauge	Approx. wt. 100 buckets, lb.	Capacity, cu. in.	Length across belt	Projection from belt	Gauge	Approx. wt. 100 buckets, lb.	Capacity, cu. in.
9	5-1/2	14	304	149	14	6	8	1040	290
		12	425						
		10	545		15	6	14	495	311
							12	685	
10	5-1/2	14	326	165			10	870	
		12	455				8	1090	
		10	585						
					16	6	14	520	332
11	5-1/2	14	348	182			12	725	
		12	485				10	910	
		10	625				8	1145	
12	5-1/2	14	370	199	17	6	14	550	353
		12	515				12	755	
		10	665				10	950	
							8	1200	
13	5-1/2	14	392	204					
		12	545		18	6	14	580	373
		10	705				12	785	
							10	1000	
14	5-1/2	14	414	230			8	1250	
		12	575						
		10	745		19	6	14	605	394
							12	815	
15	5-1/2	14	436	245			10	1050	
		12	605				8	1300	
		10	785						
					20	6	14	630	415
16	5-1/2	14	458	260			12	850	
		12	635				10	1100	
		10	825				8	1380	
6	6	14	285	124	22	6	14	680	456
		12	400				12	950	
		10	510				10	1200	
		8	625				8	1500	
7	6	14	310	145	24	6	14	730	498
		12	435				12	1040	
		10	550				10	1300	
		8	680				8	1625	

STANDARD STEEL ELEVATOR BUCKETS.—*Continued*

Gauges, No. 14 and Heavier

Length across belt	Projection from belt	Gauge	Approx. wt. 100 buckets, lb.	Capacity, cu. in.	Length across belt	Projection from belt	Gauge	Approx. wt. 100 buckets, lb.	Capacity, cu. in.
8	6	14	335	166	7	7	14	360	189
		12	465				12	500	
		10	590				10	650	
		8	730				8	800	
9	6	14	360	187	8	7	14	388	216
		12	500				12	535	
		10	630				10	695	
		8	790				8	860	
10	6	14	385	207	9	7	14	416	243
		12	540				12	570	
		10	670				10	740	
		8	840				8	920	
11	6	14	410	228	10	7	14	444	270
		12	570				12	605	
		10	710				10	785	
		8	890				8	980	
12	6	14	435	249	11	7	14	472	297
							12	640	
11	7	10	830	297	10	8	8	1130	338
		8	1040				6	1350	
12	7	14	500	324	11	8	14	560	372
		12	675				12	770	
		10	875				10	975	
		8	1100				8	1195	
							6	1425	
13	7	14	528	351					
		12	710		12	8	14	590	249
		10	920				12	810	
		8	1160				10	1025	
							8	1260	
14	7	14	556	368			6	1500	
		12	745						
		10	965		13	8	14	620	440
		8	1220				12	850	
							10	1075	
15	7	14	584	405			8	1325	
		12	780				6	1575	
		10	1010						
		8	1280		14	8	14	650	474

STANDARD STEEL ELEVATOR BUCKETS.—*Continued*
Gauges, No. 14 and Heavier

Length across belt	Projection from belt	Gauge	Approx. wt. 100 buckets, lb.	Capacity, cu. in.	Length across belt	Projection from belt	Gauge	Approx. wt. 100 buckets, lbs.	Capacity, cu. in.
							12	890	434
16	7	14	612	432	14	8	10	1125	
		12	815				8	1390	
		10	1055				6	1650	
		8	1340						
					15	8	14	680	507
17	7	14	640	460			12	930	
		12	850				10	1175	
		10	1100				8	1455	
		8	1400				6	1725	
18	7	14	668	487	16	8	14	710	541
		12	885				12	970	
		10	1145				10	1225	
		8	1460				8	1520	
							6	1800	
19	7	14	692	514					
		12	920		17	8	14	740	568
		10	1190				12	1010	
		8	1520				10	1275	
							8	1585	
20	7	14	720	541			6	1875	
		12	955						
		10	1235		18	8	14	770	599
		8	1580				12	1050	
							10	1325	
22	7	14	776	595			8	1650	
		12	1025				6	1950	
		10	1325						
		8	1700		19	8	14	800	643
							12	1090	
24	7	14	832	649			10	1375	
		12	1100				8	1715	
		10	1415				6	2025	
		8	1820						
					20	8	14	830	677
8	8	14	470	271			12	1130	
		12	650				10	1425	
		10	825				8	1790	
		8	1000				6	2100	
		6	1200						
					22	8	14	890	744

STANDARD STEEL ELEVATOR BUCKETS.—*Continued*
Gauges, No. 14 and Heavier

Length across belt	Projection from belt	Gauge	Approx. wt. 100 buckets, lb.	Capacity, cu. in.	Length across belt	Projection from belt	Gauge	Approx. wt. 100 buckets, lb.	Capacity, cu. in.
9	8	14	500	304	22	8	12	1210	744
		12	690				10	1525	
		10	875				8	1920	
		8	1065				6	2250	
		6	1275						
					24	8	14	950	812
10	8	14	530	338			12	1300	
		12	730				10	1650	
		10	925				8	2050	
							6	2400	

APPROXIMATE WEIGHTS OF AVERAGE GRADE OF RUBBER BELTING PER 100 FT.

Inch	2-ply	3-ply	4-ply	5-ply	6-ply	7-ply	8 ply	10-ply
3	22	28	34	40	47	53	60	73
3-1/2	25	32	39	46	54	61	69	84
4	29	37	45	53	62	70	78	96
4-1/2	32	41	50	59	69	78	89	107
5	36	46	55	66	77	87	98	118
6	42	54	66	79	92	104	117	143
7	50	63	77	92	107	120	136	166
8	56	72	88	104	121	137	154	190
9		81	99	117	136	154	174	213
10		90	110	131	151	171	193	236
11		99	121	148	166	188	212	260
12		108	131	156	180	206	231	282
13		117	142	169	197	222	250	306
14		126	153	182	211	238	270	330
15		134	164	195	226	256	290	353
16		143	174	208	242	272	308	377
18		161	196	231	271	308	346	424
20		179	218	258	301	340	385	471
22		197	239	285	331	375	422	517
24		214	262	311	361	408	461	564
26		232	282	337	391	443	500	611
28		250	304	361	422	472	538	657
30			326	388	451	511	575	705
32			348	414	481	545	615	751
34			370	440	512	578	653	798
36			391	466	540	613	691	854
38			413	491	571	616	729	892
40			434	517	612	680	767	939
42			456	548	631	715	805	985
44			478	569	662	748	843	1032
46			499	595	691	767	882	1078
48			521	620	717	800	921	1125
50			542	645	751	850	958	1173

[1] These figures will apply for Power-belting and Elevator-belting without extra cover, the increased weight due to covers of various thickness can be estimated from the table on page 85.

Buckets cannot be loaded to more than 70 per cent. of their capacity, and 60 per cent. is the practical limit. Unless the rate of feeding is quite regular, excess capacity should be provided below a hand-fed Blake crusher, or other machine, where the rate of feed is variable. In such cases it will not be safe to assign to the buckets more than 20 per cent. of their capacity. Where an elevator is in a closed circuit, excess capacity must be provided. It is quite a common error in crushing plants to provide large capacity for the first elevator receiving ore from the crushers, and this is often the proper procedure for the reason stated. But the second elevator in a closed circuit with rolls is frequently given much less capacity than the first, when in reality it should have far more. In raising ore and water, the maximum practical capacity of the elevator, that is, 60 per cent., will often have to be employed, because the amount of water to be raised is usually far in excess of the ore; the load per bucket of the latter is a mere bagatelle, and to obtain conditions of light loading, large buckets, large belt, and generally large construction will be necessary. When large-sized rock and much water are to be raised and excessive wear and tear is to be expected, the loading should be less than 60 per cent. I appreciate the fact that light loading can usually be obtained where it is not needed, and that the first cost of excess capacity will often be quite great, but this will be partially or altogether offset by the lower operating costs and freedom from shutdowns.

Pinions.—Some gearing is given in the table for speed reduction ratios of 4 to 1. A pinion shaft of 1–15/16 in. diameter will usually be of ample size for all but the largest elevators. For these a pinion shaft of 2–3/16 in. diameter will be of ample size, provided the ratio of reduction in rotation is not less than 4 to 1. Small elevators are sometimes driven directly by belting, but this has disadvantages. Extra countershafting will have to be installed to obtain the necessary slow speed of the head pulley. Shocks are apt to throw the belt, and the belt is apt to be thrown on starting up the elevator, for the starting torque is very great. Spare pinions should be kept on hand, and if there are a number of elevators in the mill, it will usually be possible to have the pinions interchangeable, and possibly the pinion shaft and drive pulley. It would be advantageous to have all the details at the head of the elevator interchangeable, but such a procedure will usually lead to a lack of economy in designing, and will be impractical.

Horse Power for Elevators.—The theoretical horse power for raising material in an elevator is usually given by the expression

$$\frac{\text{tons per day} \times 2000 \times \text{vertical lift in feet}}{33{,}000 \times 1440},$$

and the usual rules for horse power add 25 to 50 per cent. of the value obtained by this expression for friction. The best figure which can be obtained will only be an approximation, but a nearer expression is the actual power consumed or the total theoretical, plus 25 to 50 per cent.

plus friction. The latter factor can be obtained by finding the power to overcome the friction in the head bearings from the sum of the following terms, and following the rule for horse power consumed by bearings given under rolls. Calculate weight of head pulley, shaft and gear wheel. Find weight of belt and buckets and total load on the ascending side. The length of the belt can be taken as though it were straight from the tangent points of the pulleys, and adding 2 per cent. Assume that the stretching tension plus the driving tension is 2000 lb. All these factors added together will give the total bearing pressure on the upper bearings, and from it can be determined the horse power consumed by friction in the main bearings. Add 10 per cent. to this for miscellaneous friction, and add the power consumed in friction to the theoretical horse power to obtain the actual horse power. In calculating horse power for wet elevators, the water must not be overlooked, since this is usually by far the greater portion of the load to be raised. This can be illustrated by a typical case from practice: theoretical horse power, omitting energy while in motion, to raise ore and water, elevator No. 4, Sweeny Mill, Sweeny, Idaho, Federal Mining & Smelting Company.

WEIGHT OF ORE AND WATER IN ELEVATORS COMPARED

	Ft.-lb. per min.	H.p.	Vel., ft. min.	Lift, ft.	Ore, tons 24 hr.	Water, gal. 24 hr.
Ore.....	27,664.50	0.84	500	57	350	1,031,040
Water.....	340,242.69	10.31				
Total.....		11.15				

The strength of rubber belting is about 4000 lb. per square inch. The maximum tension in an elevator belt is at the head pulley on the loaded side, and to obtain it, add together weight of belt, buckets, the load of ore and water in them, and the tension, which includes the stretching tension, plus the tension due to driving, or $T = \frac{\text{theoretical horse power} \times 33{,}000}{V}$. The relation of maximum tension to breaking strength is not, however, of practical importance, unless viewed in the light of reduction of section from wear. The belt of few plies will amply satisfy the strength requirements when new for all lifts within 60 ft., which is about the limit of lift for ore mill elevators, and with heavily loaded buckets. A good rule to follow for the proper number of plies for an elevator belt is to divide the width by two.

Sand Pumps.—The Frenier and Abbe sand pumps are convenient and simple devices for raising limited quantities of sands and slimes to a limited height. The Frenier sand pump is described as follows, see Fig. 136: There is a wooden box *B*, which is set below the source of feed, so that the liquid to be pumped drains easily into it, and a pump wheel *A* sets into this box with its shaft supported by two bearings bolted to the sides of the box, so that the center of the shaft is 7 in. above the sand and water, and is so protected that

no sand can get into its bearings. At the upper part of the box is an overflow opening (3) to drain off any surplus water or sand. The wheel *A*, Figs. 136 and 137, is made with a spiral passage beginning from the outside where it forms a scoop, and is coiled around and around until it reaches the center of

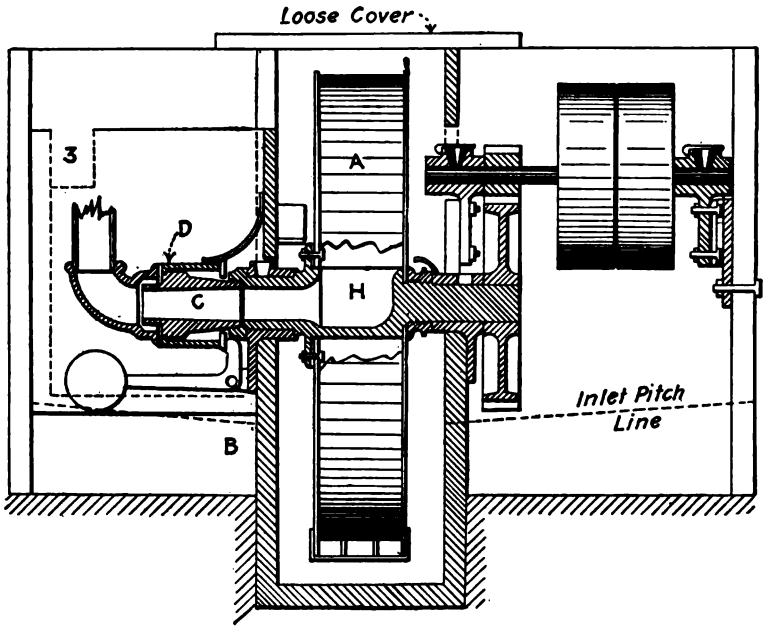

FIG. 136.

the wheel where it connects with the open side of the hollow shaft *H*. One end of this shaft is hollow, and connects with a detachable hollow shaft *C*, which works in a packing box *D*, said packing preventing the sand from getting in contact with the shaft *C*. The Abbe improvement, Figs. 138 and 139, consists in making the receiving tank or chamber round, and the same size as the spiral wheel, and fastening the tank to the pump proper, causing it to revolve with it. The sand and water enters the receiving chamber through a center opening and, as with the Frenier pump, the end of the spiral in the pump portion at each revolution picks up a charge of sand and water. Less power is required with the Abbe improvement since the pump has not to be forced through the sand and water, and no grit can be splashed on the bearings and gearings, as was possible with the original pump.

FIG. 137.

The action of either form of pump is to make a column of alternate sections of air and water.

The weight of the column of air and water in the vertical pipe is largely balanced by the sum of the individual moments of the masses of water in the spiral or

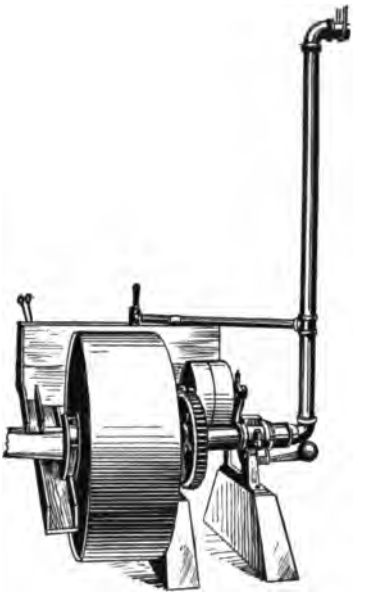

FIG. 138.

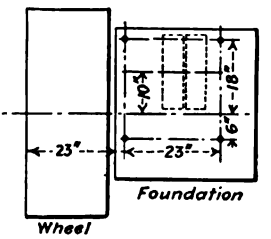

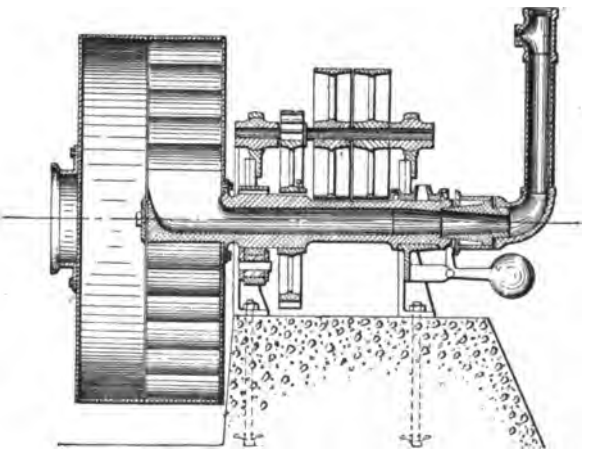

FIG. 139

$wl + w'l' + w''l''$, etc. $= W\rho$, where ρ is the radius of gyration and W the weight of the whole mass. Evidently the power of the pump increases with diameter. The pump delivers in spurts, but it is claimed that this can be overcome by carrying the lift column up to some height above the discharge point, leaving it open that the air may escape, and at the discharge point having a tee and pipe of smaller diameter than the lift column.

SIZES AND CAPACITY

Size No.	Size of wheel in in.		Capacity, gallons per minute	Maximum lift in ft.
	Thickness, in.	Diameter, in.		
1	20	55	60 to 90	22
2	20	47	50 to 80	15
3	14	55	30 to 60	22
4	14	47	25 to 50	15

Lifts at High Altitudes.—The lifts in the above table are for altitudes of 1000 ft. or less above the sea level. For higher elevations, deduct 4 in. for every 1000 ft.

WEIGHTS

Size No.	Weight, wheel	Weight, pump	Shipping weight
1	850	1850	2150
2	700	1650	1850
3	650	1650	1800
4	520	1500	1650

The pump requires only 1 to 2 h.p. according to the number of gallons and height raised.

Speed.—The speed of the wheel is 15 to 20 r.p.m. Maximum speed of countershaft is 90 revolutions for the 14 × 55 and 20 × 55; 100 revolutions for the 14 × 47 and 20 × 47. Pulleys are 18 in. for all sizes.

Sand wheels, outside of very small ones, are seldom employed in concentrating mills. In the South African gold mills and in the Lake Superior copper region they obtain large diameters, the details of construction being intricate and expensive. These wheels are made up to 60 ft. in diameter. Their speed must be comparatively low to prevent ore and water from slopping over a long arc at the top of the wheel. These wheels have the advantage of permanency, little cost for upkeep, and large capacity, for the buckets are practically continuous, being inclined vanes set at regular intervals between flange edges arising from the periphery of the wheel. For low lifts up to 8 or 10 ft., a wheel of this type, made of an ordinary power pulley, with sheet-steel flanges riveted to the edge of the face of the pulley, and with inclined vanes riveted to the flanges, might have some application in the ordinary concentrating mill, as, for example, for raising table concentrates to a loading tank or bin.

Centrifugal pumps are much advocated for raising sand and slime. The

ordinary small centrifugal pump, even when provided with liners and means for creating an inflow of water at the gland, is a failure where the material to be raised is of highly abrasive character. In such a case the destructive effect of the grit is very marked on the shaft at the point where it passes through the stuffing box. I have seen shafts cut through at this point in 48 hour's service, when raising zinc middlings containing a large proportion of pyrites, and despite the fact that there was an indraft of water at the gland. In some of the large Missouri mills, centrifugal pumps have been used to raise comparatively large-sized rock, but as the ore and gangue is galena and limestone, the wear is light. For quartz or harder ores, I would not use a centrifugal pump for any size coarser than slime. Centrifugal pumps can be made to operate more or less continuously with hard ores in a coarse condition of comminution, but they require constant attention, cause frequent shutdowns, and give much worry, and in point of satisfactory service there is no comparison with a bucket elevator.

Air Lift.—The air lift is another device which, as a means for raising fine ore and water, enjoys some vogue, to which it is certainly not entitled. The value of the air lift as a means of raising water is set forth among other literature in Hans Behr's pamphlet on "Mine Drainage" (Bulletin 9, Cal. State Mining Bureau). The data presented in this publication are on Behr's and Ross E. Browne's experimental work. To quote:

"The operation of this apparatus (air lift pump) depends upon the buoyancy of air introduced into the column pipe in bodies alternating with liquid, the air forming virtually a piston more or less complete, and pushing the water ahead of it. . . . The column pipe is an open pipe, the lower part of which requires to be submerged for such a depth that the hydraulic pressure due to immersion will not quite equal the pressure of the compressed air entering the bottom of the column pipe by means of the small air pipe."

The experiments of Behr and Browne showed that if H is the height of unsubmerged column, and h the submerged, that if $\frac{H}{h}$ exceeded 4, no water could be raised whatever, and the efficiencies slowly increased to 40 per cent. approximately when $\frac{H}{h}$ equals 1, being about 30 per cent. when equal to 1–1/2 and 25 per cent. when 2, the efficiencies being the ratio of the water raised to the work of the compressor used in the experiment. For any particular value of $\frac{H}{h}$ the best efficiencies, below $\frac{H}{h}$ equals 1 or less, were obtained when the pressure in the receiver did not greatly exceed the pressure due to submergence. All these conclusions must be perfectly evident. It is quite clear that the compressed air cannot have a pressure much greater than that created by the weight of the submerged column, otherwise the air would go up the outside column; consequently in order to have H great or the effective lift great, h must also be large. This means

that in a mill either great loss of head room must be sustained or the pipe must be let down into the ground for a considerable depth. If the latter course is pursued and the mill should shut down unexpectedly, the lift will have to be dug out—not a very easy task. The device is impractical for use within the mill, and it is difficult to conceive of conditions outside the mill where its use would be warranted.

CHAPTER IX

GRADING AND GRADING DEVICES ACCORDING TO DIAMETER AND VOLUME

Grading devices are necessary in the crushing plant for dividing the work of crushing machines so that all will get the proportion assigned to them by the test work and to lesser degree so that each machine will not receive pieces larger than it is capable of seizing, or pieces smaller than the discharge opening. In the separating mill grading in some form is necessary to the proper performance of the separating machine, as will be shown later, as well as to limit the range of size of material suited to the different kinds of separating machines and their varying adjustments. The characteristic of any form of grading is the making of pieces which do not exceed a certain maximum size fixed by the adjustments of the grading machine. There is also a lower limit of size well fixed in the case of grading machines such as screens, but more or less obscure in the form of grading devices known as classifiers. All the work of grading in the crushing plant is done by screens, and in the vast majority of separating mills all the production of large sizes is done by screens, this type of grading device being by far the most important for any sort of mill work.

Screening consists in eliminating all the grains capable of passing through the openings in a screen by imparting motion to these grains so that they may accidentally arrive over an opening and fall through. The word "accidentally" is used for a reason. Grains of ore or rock are of all dimensions, and this applies to grains of equal volume. If three axes for measurement are applied to the individual grain, the measurements will vary as the axes are rotated. If the grains will pass through the screen openings in any axial position so as to leave a relatively large space around them bounded by the screen opening, then the elimination of these grains can be considered quite easy. On the other hand, there will be grains which will barely pass the screen opening in one axial position, and screening of these grains, or getting them into the undersize will be a difficult, or almost impossible operation. But the actual elimination of grains of this character is a measure of the efficiency of the screening device. The ideal grading device, according to diameter, from a theoretical point of view, would be one which individually would try each grain in a multitude of axial positions for passage through a screen opening, quickly pass it on if it could not pass through the opening, and quickly bring into position another grain for such a trial, the grading device being supposed to have a plurality of openings, all be-

ing similarly employed. The theoretically perfect sizing device can thus be described, although there is no known mechanical equivalent.

In all screening devices employing power for actuation, the ore is fed in at one end and that which fails to pass through the screen opening is discharged at the other, the motion for progression being given mechanically. The ore slides over the surface of the screen in a more or less thick layer and it must be quite evident that the arrival of a grain to a position where it can fall through the screen opening is quite accidental; its possibility of passage through the opening is therefore analogous to the mathematical problem of determining the chance of a sphere of any given diameter cast at random toward any regular arrangement of equal sized and shaped patterns of given area falling completely within such pattern. To put these screening problems in the simplest form, let it be assumed, Fig. 140, that there is a square meshed screen of length of side of opening l, the thickness of wire being neglected. Approaching the borders of a square from any direction, and at a rate of speed whose maximum will be determined later, is a spherical grain of ore of diameter $\frac{l}{n}$, n being assumed to be of any value equal to l or greater. Then, evidently for the grain to fall entirely through the square, that is, within the square, it must pursue some path, marked by its center projected, such that at some point in its path the center projected will fall inside the square of side $l - \frac{l}{n}$, and having the same center as the square of side l. A little reflection will show that the chances of the grain falling through the square are in the ratio of the area of the inner square to the area between the inner square and the outer; or, $\frac{l^2 - \frac{2l^2}{n} + \frac{l^2}{n^2}}{\frac{2l^2}{n} - \frac{l^2}{n^2}}$, which reduces to $\frac{n^2}{2n-1} - 1$

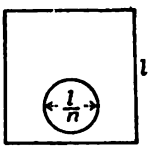

FIG. 140.

The inverse ratio fixes the number of squares the grain will have to pass over before it will pass through a square. If the square be made with side l equals one inch and n be made 8, 4, 2 and 1, the following tabulation of chance of falling through the square 1 in. side, and the probable number of squares, grains of 1/8 ,1/4, 1/2 and 1 in. have to cross before falling through a 1 in. square, can be written:

Size grain	Chance of falling in square side 1 in.	Probable squares 1 in. side to cross
1/8-in.	3.27	0.31
1/4-in.	1.29	0.78
1/2-in.	0.33	3.00
1-in.	0.0	Infinity

The difficulty of eliminating grains of nearly the size of the screen open-

ing is apparent. If values of n and corresponding ones of the inverse ratio be platted a hyperbola will be obtained one end of the curve showing the infinitely great freedom of passage of infinitely small grains, and the other end of the curve, the infinite difficulty with which grains of nearly the same size of opening as the screen have to contend in passage through the screen. The simple analysis given might easily be extended to cover cases where the opening is not continuous, being but a percentage of the area of the screen, and consisting of round or square holes arranged at regular intervals in two directions. In any of these cases the ratios of area through which the grain could not fall, and through which it could fall, would give the factors for determining the chance ratio. The facts brought out by the simple analysis have a bearing on why the work of fine screens is so inferior to that of coarse, and measured in the sense already stated, the more or less ease with which grains of nearly the size of the screen openings pass through these openings. If for values of l, $\frac{l}{n}$ be platted as y, and x as the chance, then the hyperbolas which are obtained are symmetrical, the radius of curvature increases with l.[1] The average value of P or the chance, will represent for any given screen opening side l, the average chance of grains passing through from size l to o. Evidently, P is the area bounded by the curve and the axes Y and X, and this area divided by y. Evidently since there can be no quadrature of the curve between such limits, there can be no actual solution for the average value of x or P, but approximate relative values can be obtained by considering the hyperbolas circles tangent to the axes at distances l. By finding the area bounded by the 90 deg. arcs of the circle, tangent to axes X and Y, and dividing by l, the chance P for openings of different size can be determined. Very evidently the average chance of the ore grains increases as l increases. Another way to state the problem would be that per unit of screen area, the fine screens have less capacity than the coarse, for it will be evident that to get the greater portion of the undersize grains through the fine screens, they will have to have greater extent, and this amounts to the same thing as the first statement. Further, screening devices of the same pattern and of the same size, will have decreasing capacity when provided with successively finer screens.

The maximum velocity which the grain can approach the opening under condition of falling entirely within the square, can be obtained as follows: The equation of parabola with origin at the approach opening of side l is $x^2 = \frac{2V^2y}{g}$, where V is velocity in feet per second, and g the acceleration of gravity. If the grain approaches the opening with path at right angles to a side l, the maximum permissible velocity is obtained when $x = l - \frac{l}{2n}$ and $y = \frac{l}{n}$, substituting these values in the formula, V becomes $\left(l - \frac{l}{2n}\right)\sqrt{\frac{ng}{2l}}$.

[1] l should be taken in a unit sufficiently small to make the curves substantially equilateral hyperbolas.

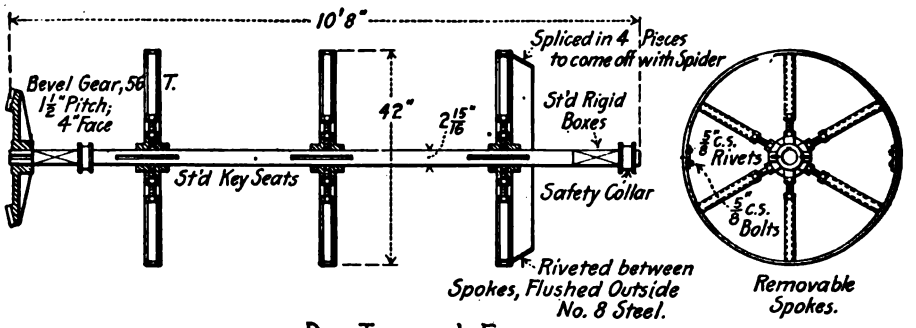

Dry Trommel Frame.

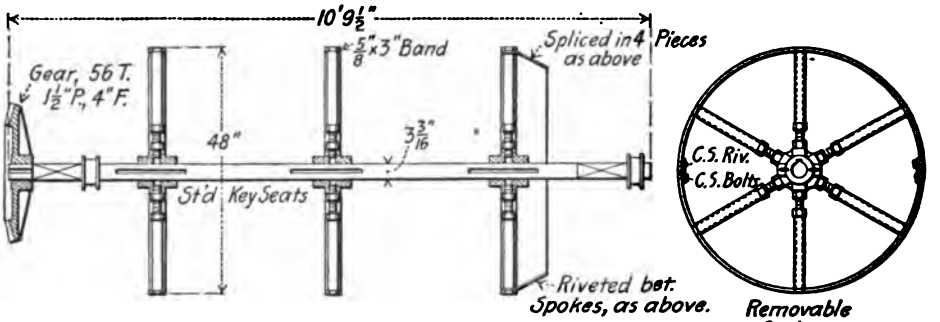

Wet Trommel Frame.

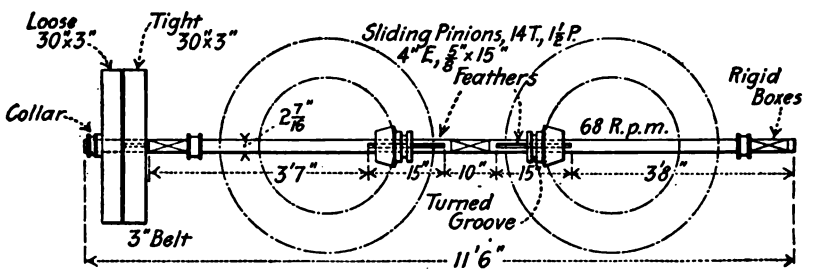

Counter Shaft for Dry Trommels.

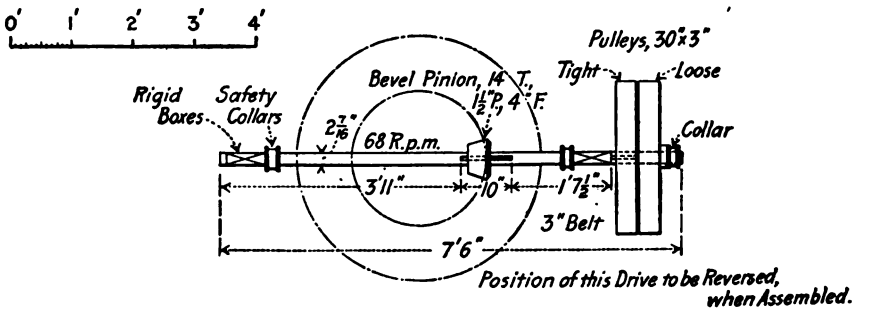

Counter Shaft for Wet Trommels.

FIG. 141.

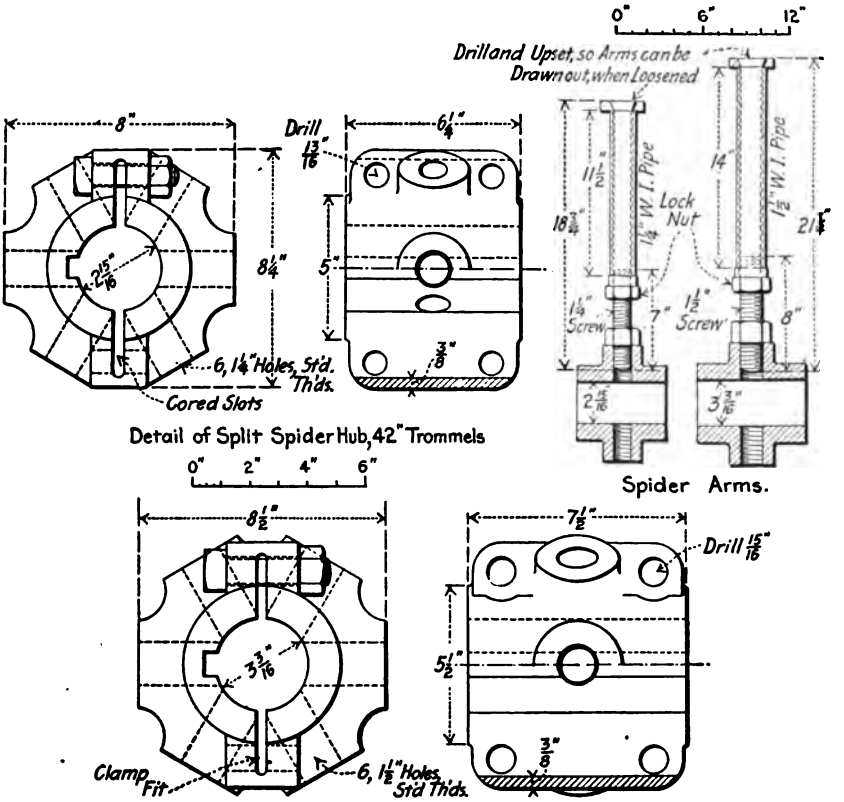
0" 6" 12"
Drill and Upset, so Arms can be Drawn out, when Loosened
8"
Drill 13/16
6 1/4"
8 1/4"
5"
2 15/16
6, 1 1/4" Holes, Std. Thds.
Cored Slots
3/8"
11 1/2"
1 1/4" W.I. Pipe
18 3/4"
Lock Nut
14"
1 1/2" W.I. Pipe
21 1/2"
1 1/4" Screw
7"
1 1/2" Screw
8"
2 15/16
3 3/16
Detail of Split Spider Hub, 42" Trommels
Spider Arms.
0" 2" 4" 6"
8 1/2"
3 3/16
7 1/2"
Drill 15/16
5 1/2"
3/8"
Clamp Fit
6, 1 1/2" Holes, Std Thds.
Detail of Split Spider Hub for 48" Trommels.
2"
Rounded off
18"
1 1/2" x 2"
1/2"
7 1/2"
36"
Shifter Details.
2"
6"
5/8"
Shifter Link.
1" Turned
8 1/4"
10 1/2"
Shifter Yoke.
0" 12" 24"
0" 6" 12"
5/8" x 14" M. Bolt
Taper Hole 3/4" to 15/16"
No. 10 Steel Band, 3" wide
Detail of Screen Bands.
Gear Shifter.

FIG. 142.

When n equals 1, the conditions are obtained under the problem when the chance of the grain going through the screen opening becomes zero. Under these conditions $V = (l - l/2)\sqrt{\frac{g}{2l}}$. The shortest path the grain can take will be one which will bring it tangent to two sides of the opening and the longest when it pursues a diagonal of the opening.

Trommels.—The screening machine most commonly used in the mills is the cylindrical revolving trommel. See Figs. 141 and 142. The trommel is essentially a skeleton mounted on the shaft to which are attached screen plates in the form of rolls or cast perforated plates of steel or special steel, or chilled iron, or brass or iron cloth. The axis of the cylindrical trommel is inclined downward toward the discharge end, the ore or rock being fed in the upper and under the combined motion produced by the slope, and rotation about the shaft, the ore forms a slowly advancing bank in the interior. The undersize grains fall through where the bank is in contact with the screen. The bank occupies practically the whole length of the trommel, is narrow compared with its length, and has a place in the bottom of the trommel to one side or the other of the lowest line of the trommel, depending on its rotation, the bank tending to move in the direction of the rotation. As the trommel revolves, the bank repeatedly rises to a limiting position, and then falls back, but at the same time advances forward a small amount due to the slope of the machine. The path of a particle in the bank is therefore a series of saw teeth, the pitch of the teeth representing the forward movements. The relations of slope and path of grain to number of revolutions per minute and diameter of trommel, has been given by Richards as follows:

"Let W = weight of an ore particle, c, centrifugal force, f, natural angle of friction, or angle between a horizontal and a tangent to the circle at the point where the ore slides, with gravity acting alone, i = increase of f due to c; V = peripheral velocity of the trommel in feet; r = radius of the trommel in feet; g, acceleration due to gravity; s, sliding angle due to g and c combined, which, from the similarity of triangles, is equal to $f + i$. Now since the sides of a triangle are proportional to the sines of their opposite angles $\frac{c}{W} = \frac{\sin i}{\sin f}$ or $\frac{c}{W}\sin f = \sin i$, and substituting in this formula the value for centrifugal force $c = \frac{Wv^2}{gr}$, we get $\frac{V^2}{gr}\sin f = \sin i$, which shows the increase in the angle of friction due to centrifugal force." If $f = 35$ deg., then "When the sliding angle is 90 deg. greater than the angle of friction due to gravity alone (90 deg. plus 35 deg. = 125 deg.) a particle of ore will be carried completely around the trommel."

For a 30-in. trommel, Richards has calculated that the action takes place when the trommel revolves 64 times per minute; for a 36-in. trommel, 58.4 r.p.m.; for a 48-in. trommel, 50.6 r.p.m. A more elaborate mathematical analysis of the movement is given by Louis, "The Dressing of Minerals."

If α be the slope of a trommel, then evidently each movement of the bank measured by a grain rising from the lowest position in the trommel and

sliding back to a point below the first will advance the grain an amount equal to chord of upward path times tan α. The chord can be determined from r and $i + f$. The time ascending the trommel is $\frac{f+i}{360 \text{ deg.}} \frac{}{N}$, when N = r.p.m. On the downcoming path, the particle passes through a portion of an ellipse, of which the minor axis is evidently $2r$ and the major $\frac{2r}{\cos \alpha}$. Since, for the small slopes at which trommels are set, cos α is very nearly one, and since for the length of an elliptical arc, the expression is involved and indeterminate, the ellipse can with little error be assumed to have a circumference equal $\pi \frac{a+b}{2}$, where a is the major axis $\frac{2r}{\cos \alpha}$, and b the minus axis $2r$. Having determined the length of the elliptic arc in the way given, the time t of traversing it is $\frac{L}{\sqrt{2gx}}$, where L is the length of curve fallen through, and x the height fallen through. The whole time in seconds is evidently $\frac{f+i}{6N} + \frac{L}{\sqrt{2gx}}$ for one cycle of path. It is evident that while the advance increases with revolutions per minute, the time increases also, or the velocity of forward advance will vary up to the point where centrifugal force will carry the particle entirely around the trommel. The forward advance increases much more slowly than the increase in revolutions. It has been assumed in this discussion that a grain will start from the lowest point in the trommel, rise to the highest point possible under given conditions, and return to this point when it slides back, but the grain does not come back to the lowest point in the trommel, since the rapidly increasing friction as it slides down the trommel would stop it at some point above the lowest line. According to the theory as so far stated, a single grain should take up the angular positon $f + i$ on the side of the trommel, and pursue a path parallel to the axis of the trommel at such an angular position, the path being a straight line. Where there are a multitude of particles, the top grains must slide down over the lower ones until there is a top-heavy accumulation, which will slide down toward the bottom of the trommel, when the whole action is again repeated, giving the characteristic swinging back and forth of the bank. Where the grains forming the bank are perfectly free from one another, as in dry ore, there appears to be a rotation of the grains about the center of the bank, and without this action, screening is very inferior, particularly if the trommel be heavily loaded. The position the bank will assume on the inner upgoing surface will depend upon the velocity and diameter; other things being equal, the greater the peripheral speed, the higher the lower limiting position of swing. The reason for the rotation of the bank is that, as the grains swing over at the top position of the bank from being crowded by the uprising grain, they must work down over these grains, finally reaching the bottom of the bank, when they will again ascend along the screen and repeat a cycle of such rotation.

Such rotation is more pronounced around the confines of the bank and becomes less toward the center. Undersize grains in the outside of the bank have, by this action, a greater chance to come in contact with the screen and pass through the openings. Wet ore in which the coherence increases inversely as the diameter, displays very little rotation in the trommel, there being almost none at all with wet sand, and should there be a heavy load of sand in a trommel, forming a deep bank, screening is very imperfect. Increase of slope will very materially aid in thinning a deep bank and for large capacity in trommels, the slope should be greater than with a light load. The main inferiority of the trommel lies in the lack of perfect freedom of motion of the individual grain; that is, the undersize grains do not approach the holes in a layer one grain deep. The tumbling action which has just been described, does, however, help to bring the grains in different axial positions over the holes, and thus helps to eliminate those of very nearly the size of the openings.

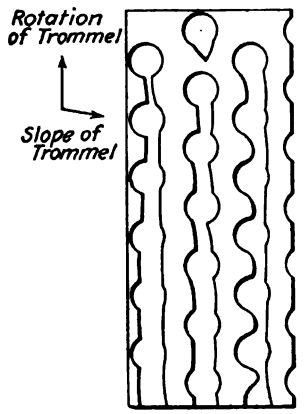

FIG. 143.

Slope for Trommel.—The best slope for trommel can be determined from properly conducted test work. It has been shown in the theoretical discussion of the screen in the earlier portion of the chapter, that unless the grain approaches the opening in the screen with a velocity less than a certain maximum, that it cannot get through, and such velocity becomes less as the size of the grain approaches that of the opening; consequently in trommels the grains ought, theoretically, to approach the screen opening slowly, but if the trommel is run with a small slope, the bank will be so thick that the advantage obtained by slow forward movement is very much offset by lack of individual chance of getting through the screen. The slope of trommels ranges all the way from 1/2 in. to the foot to 3 in. In the absence of experimental data the slope had better be placed at 1–1/2 in. to the foot or about 7 deg. 7 min. The tendency of late years in trommel design has been to increase slope, a favorite figure a decade ago being 3/4 or 1 in. to the foot, and to decrease length. A cylindrical trommel consisting of two sections of plate or cloth is now very popular as contrasted with the three or four sections which were in favor a decade ago. It is being recognized that all screening machines are defective in eliminating the undersize grain near the size of the opening, that the easily eliminable grain gets through the opening near the feeding point and extra length beyond two lengths of plate or cloth, adds little or nothing to the screening efficiency. Also greater slope than used to be considered good practice is found to help thin out the bank and provide for more individual treatment of the undersize grains. The wear on the screening material is also more uniformly distributed where

the slope is comparatively great. If the trommel had no slope whatever, wear would evidently take a series of peripheral paths and would proceed from the lower edge of one hole to the upper of the one below, the end action being to cut the screen into ribbons, but as the slope is increased, the wear tends to become more general since there is a forward as well as peripheral attack. Fig. 143 shows actual conditions of extreme wear on a trommel plate which has been under service in a trommel with small slope.

Capacity of Trommel.—Practice has fixed the best number of revolutions for trommels as 20 per minute for 36 in., 18 for a 42 in., and 17 for 48 in., the latter size being about the limit of size to be found in the mills.

My rule for the capacity[1] of 48-in. trommels when not working in a closed circuit, is diameter of opening in millimeters times 20 gives tons per 24 hours for round holes in punched plate; 25 should be substituted for 20 where there are square openings. This rule is based on 2 to 1 ratio; for example, if in the crushing plant, the ore is crushed to 1–1/2 in., and then passes into a 3/4-in. round-hole screen, then the ratio of sizes will be 2 to 1, but if the ore were crushed to 3 in. and then fed to the trommel with 3/4-in. holes, the capacity then would be much greater, practically to an additional amount in excess of the tonnage of over 1–1/2 in. size. A battery of trommel screens is usually arranged in series one below the other so that the screen with largest openings is at the top of the line, and the screens with successively diminishing openings are ranged in order below. The undersize of the first screen goes directly to the second and furnishes it with feeding material; the undersize of the second is delivered to the third in the same manner, etc. Each screen also makes oversize. All the trommels are arranged on the same sloping line. This is the only satisfactory way of arranging trommels in series, and it should always be adopted unless strong reason exists for a different one. In this mode of arrangement it will only be necessary to see that the uppermost trommel has not a greater rate of feed than called for by the rule, when it will be found that the others below will not be overloaded. There should be no closed circuit in the mill proper. In the crushing plant where this occurs the capacity of the trommel equipment should be twice that shown by the rule for the original rate of feed.

Trommel Preparations.—For heavy revolving grizzlies it is quite common to use chilled cast iron or manganese steel plates, with cored holes as screens. For ordinary trommels, with openings less than 1–1/2 in. perforated steel plate and brass or steel cloth is used. The perforations in the plate can be made round, square or slotted, the usual perforation being round, the slotted being used where the ore has a more or less fixed direction of travel, the long axis being arranged in this direction, providing more space for the undersize grain to get through. Slotted brass and steel cloth are also being made for uses similar to the one just mentioned. The most economical way of punching round holes in point of space is to have the centers of one line of holes

[1] Within certain limits the more lightly the trommel is fed the better will be the screening results. For each 6 in. diameter less than 48 in. 15 per cent. should be deducted from the capacity figure given above.

Table for Punching Steel Plates

This table gives the greatest thickness of steel in which it is advisable to punch round or square holes of given diameters or sizes. Spacing, strain upon the plate, wear of dies and other considerations determine what is advisable. While the table is offered as a convenient guide in ordering, thinner plates will generally answer every requirement, and cost less.

Diameter of hole			U. S. Standard gauge		
Millimeters	Inches	Decimal of an inch	No.	Thickness in inches	Weight per square foot
3/4		0.02952	26	0.018	0.731
1		0.03937	24	0.022	0.894
	3/64	0.04687	22	0.028	1.138
1-1/4		0.04921	20	0.035	1.423
1-1/2		0.05906	18	0.049	1.992
	1/16	0.06250	18	0.049	1.992
	5/64	0.07812	16	0.065	2.642
2		0.07874	16	0.065	2.642
2-1/4		0.08858	16	0.065	2.642
	3/32	0.09375	16	0.065	2.642
2-1/2		0.09843	16	0.065	2.642
3		0.11811	14	0.083	3.374
	1/8	0.125	14	0.083	3.374
3-1/4		0.12795	14	0.083	3.374
3-1/2		0.1378	12	0.109	4.431
	9/64	0.14062	12	0.109	4.431
4		0.15748	12	0.109	4.431
4-1/2		0.17717	10	0.134	5.448
	3/16	0.18750	10	0.134	5.448
5		0.19685	10	0.134	5.448
5-1/2		0.21654	10	0.134	5.448
6		0.23622	10	0.134	5.448
	1/4	0.25	8	0.165	6.708
6-1/2		0.25591	8	0.165	6.708
7		0.27559	3/16	0.187	7.622
	9/32	0.28125	3/16	0.187	7.622
	5/16	0.3125	3/16	0.187	7.622
8		0.31496	3/16	0.187	7.622
9		0.35433	3/16	0.187	7.622
	3/8	0.375	3/16	0.187	7.622
10		0.3937	1/4	0.25	10.163
11		0.43307	1/4	0.25	10.163
	7/16	0.4375	1/4	0.25	10.163
12		0.47244	1/4	0.25	10.163
	1/2	0.5	1/4	0.25	10.163
13		0.51181	1/4	0.25	10.163
14		0.15518	1/4	0.25	10.163
15		0.59055	1/4	0.25	10.163
	19/32	0.59375	1/4	0.25	10.163
	5/8	0.625	1/4	0.25	10.163
19		0.74803	1/4	0.25	10.163
	3/4	0.75	1/4	0.25	10.163
22		0.86614	1/4	0.25	10.163
	7/8	0.875	1/4	0.25	10.163
25		0.98425	1/4	0.25	10.163
	1	.....	5/16	0.312	12.703

midway between the centers of the next row. It will be evident that even if the holes touched one another, the per cent. of open area cannot be greater than 75.54. In practice in order to provide sufficient stock to give good life to the screen, the percentage of open space does not exceed 33. See Fig. 144. The table shows the largest size hole which can safely be punched in plates

TABLE SHOWING WEIGHT PER SQUARE FOOT OF DIFFERENT SHEET METALS

Thickness in fractions of an inch	Number of gauge	Birmingham gauge					Special gauges		Number of gauge
							Sheet zinc		
		Decimal of an inch	Sheet iron	Steel	Copper	Brass	Thickness	Weight	
1/2		0.500	20.141	20.326	23.125	21.400			
7/16		0.437	17.623	17.785	20.234	18.725			
3/8		0.375	15.106	15.244	17.344	16.050			
5/16		0.312	12.588	12.703	14.453	13.375			
	1	0.300	12.037	12.198	13.590	12.840	0.002	0.07	1
	2	0.284	11.395	11.547	12.865	12.155	0.004	0.15	2
	3	0.259	10.393	10.530	11.732	11.085	0.006	0.22	3
1/4		0.250	10.070	10.163	11.562	10.700			
	4	0.238	9.549	9.677	10.781	10.186	0.008	0.30	4
	5	0.220	8.827	8.945	9.966	9.416	0.010	0.37	5
	6	0.203	8.145	8.254	9.195	8.688	0.012	0.45	6
3/16		0.187	7.552	7.622	8.672	8.025			
	7	0.180	7.222	7.318	8.154	7.704	0.014	0.52	7
	8	0.165	6.620	6.708	7.474	7.062	0.016	0.60	8
	9	0.148	5.938	6.017	6.704	6.334	0.018	0.67	9
	10	0.134	5.376	5.448	6.070	5.735	0.020	0.75	10
1/8		0.125	5.035	5.081	5.781	5.350			
	11	0.120	5.815	4.879	5.436	5.136	0.024	0.90	11
	12	0.109	4.373	4.431	4.937	4.665	0.028	1.05	12
	13	0.095	3.811	3.862	4.303	4.066	0.032	1.20	13
	14	0.083	3.330	3.374	3.759	3.552	0.036	1.35	14
	15	0.072	2.889	2.927	3.261	3.081	0.040	1.50	15
	16	0.065	2.608	2.642	2.944	2.782	0.045	1.68	16
1/16		0.062	2.517	2.541	2.890	2.675			
	17	0.058	2.327	2.358	2.627	2.482	0.050	1.87	17
	18	0.049	1.966	1.992	2.219	2.097	0.055	2.06	18
	19	0.042	1.685	1.707	1.902	1.797	0.060	2.25	19
	20	0.035	1.404	1.423	1.585	1.498	0.070	2.62	20
	21	0.032	1.284	1.301	1.449	1.309	0.080	3.00	21
	22	0.028	1.123	1.138	1.268	1.198	0.090	3.37	22
	23	0.025	1.003	1.016	1.132	1.070	0.100	3.75	23
	24	0.022	0.882	0.894	0.996	0.941	0.125	4.70	24
	25	0.020	0.802	0.813	0.906	0.856	0.250	9.40	25
	26	0.018	0.722	0.731	0.815	0.770	0.375	14.00	26
	27	0.016	0.642	0.650	0.724	0.684	0.500	18.75	27
	28	0.014	0.561	0.569	0.634	0.599	1.000	37.50	28
	29	0.013	0.521	0.528	0.588	0.556			29
	30	0.012	0.481	0.487	0.543	0.513			30
	31	0.010	0.401	0.406	0.453	0.428			31
	32	0.009	0.361	0.365	0.407	0.385			32

of any given thickness; the weight of the different thicknesses is also given by the table on the preceding page. For standard perforated metal with round hole one-third of these weights should be deducted for the openings. In choosing perforated plate for the trommel, preference should be given to the plates of medium thickness; since while the thin plates offer less obstruction to the passage of the undersize grain they wear out more quickly than do the thicker ones, and these two opposing factors call for a plate of medium thickness. The following sizes and plates can readily be obtained: 1/8 in. thick, from 28 to 60 in. wide; 3/16 in. thick, from 24 to 72 in. wide; 1/4 in. thick, from 24 to 96 in., 5/16 in. thick, from 30 to 96 in., 3/8 in. thick, from 30 to 96 in., 1/2 in. thick, from 36 to 96 in., 10 gauge thickness, from 24 to 72 in., 12 gauge, from 24 to 60 in., 14 gauge, from 24 to 54 in., 16 gauge, from 24 to 48 in., 18 gauge, from 24 to 48 in., 20 gauge, from 24 to 48 in., 22 gauge from 24 to 42 in., 24 gauge, from 24 to 42 in. The widths 24, 26, 28, 30, 36, 42 and 48 in. are obtainable in all the thicknesses given. For a two-length trommel the 36 in. width makes a trommel 6 ft. long, which is much favored. The advantage of plate over wire cloth lies in its greater strength, lower life and greater freedom from blinding. On the other hand, the percentage of opening is small. The plates are curved by rolling so that the "burr" side of the punching is the screening side. This gives an opening which is slightly tapering, owing to the action of the die in punching, and helps to free the undersize grain after it passes through the smaller diameter at the inner surface of the screen.

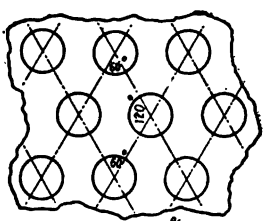

FIG. 144.

Brass and steel wire cloth is much used especially for fine screening, for while it blinds more quickly than the perforated plate, being more flexible, it can be readily beaten out. Of late years owing to the confusion due to the multitude of gauges wire cloth is sold by the leading makers by decimal fraction of an inch for the wire and fraction of an inch for the opening. It is still common, however, to reckon screen cloth by the mesh. For example, 20 mesh is 20 openings to one linear inch, but this does not mean that the opening is 1/20 in. on the side, since the thickness of the wire must be deducted in order to find the actual opening. Practically any desired opening can be obtained and a great range of size of wires for any particular size of opening. A medium size wire should be selected ordinarily, for just as with a punched plate, too large a wire will make the percentage of opening small, while too small a wire will wear out too quickly.

Trommels Substituted for Grizzlies.—In place of grizzlies for use in the crushing plant, heavy revolving screens are used mounted on friction rollers and typical designs are shown in Figs. 145 and 146. These heavy devices are quite expensive in first cost, but have the merit of low up-keep and freedom

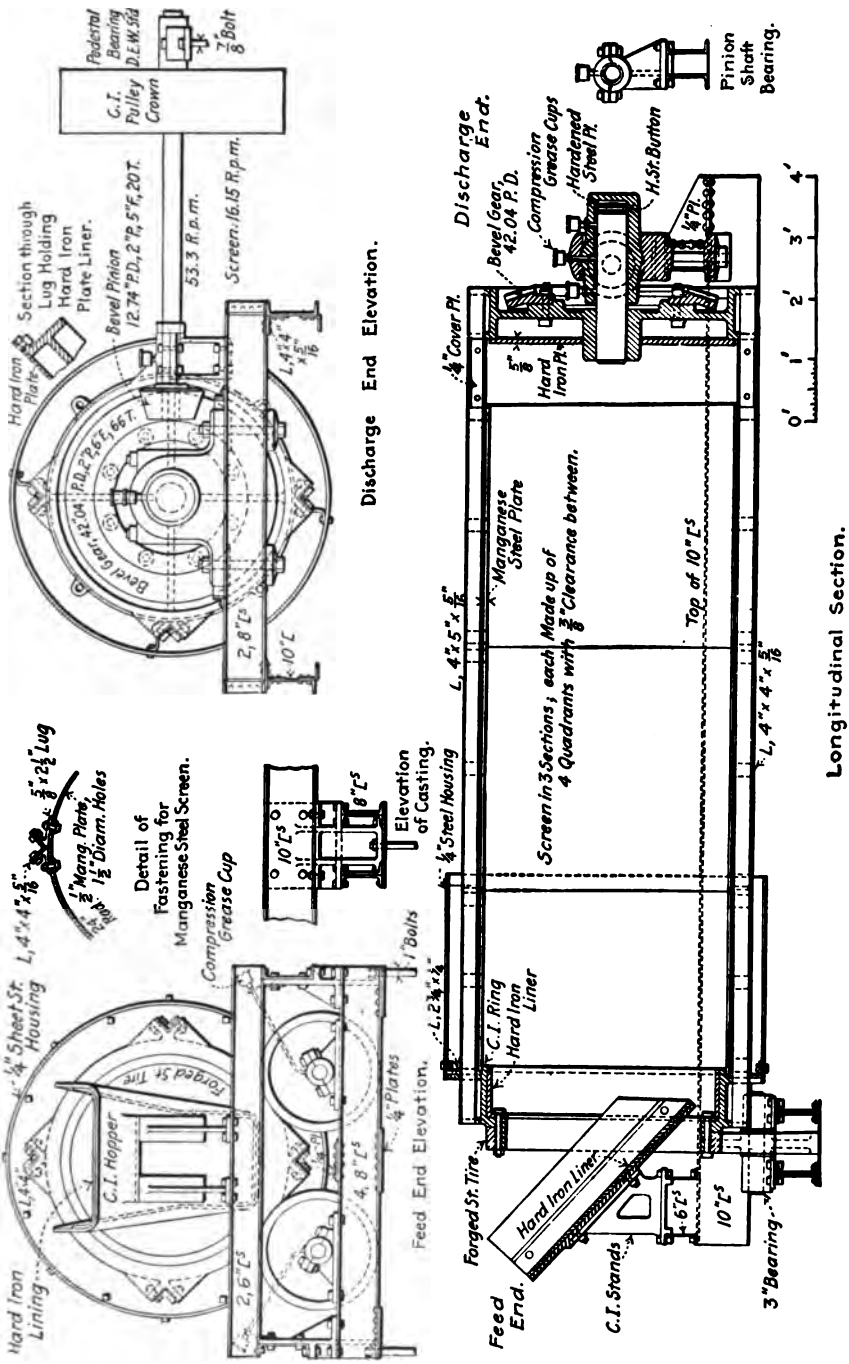

FIG. 145.[1]

[1] Denver Engineering Works.

from vibration. They provide a more cubical product than stationary grizzlies and do closer sizing.

Mechanical Construction of Trommels.—The ordinary trommel of the mill consists of shaft and boxing, spiders and hood spiders, plate or cloth, and tightening bands, and means for driving, and in wet trommels means for washing. At one time I was under the impression that a light trommel could be devised for either wet or dry screening, and which could be mounted on friction rollers and be driven by a pinion gear wheel, or sprocket chain, but the lightest design that could be made for a 48-in. trommel employing cast treads and gears or sprockets, had a weight three times that of a trommel with

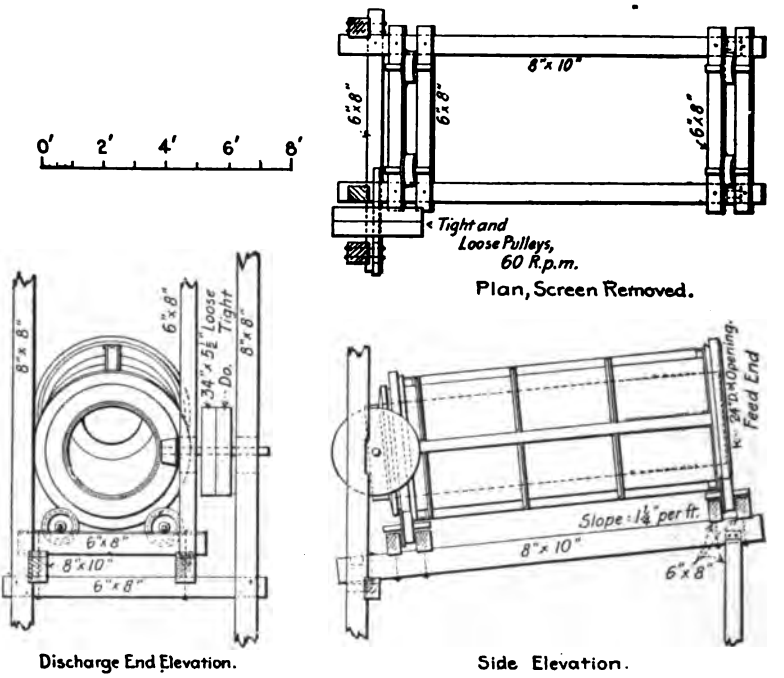

FIG. 146.

spiders and central shaft of the same diameter and effective length. See Fig. 147. It may be that some large manufacturer with ample resources may be able to provide a strong, light machine with friction wheel mounting, the treads and possibly also the gear wheel being steel stampings. The main difficulty encountered in keeping down the weight was that the trommel had to be of extra length to provide room for the treads, gearing and means for protecting the friction wheels and bearings from grit. The latter point was not so essential in dry screening, but was a *sine qua non* in wet screening. Such a trommel would have many advantages, not the least being the ease with which it could be raised by an overhead trolley through means of an ice

tong grapple. A trommel in repair being thus substituted for one out of repair. In addition, where arranged in series, it would be quite a simple

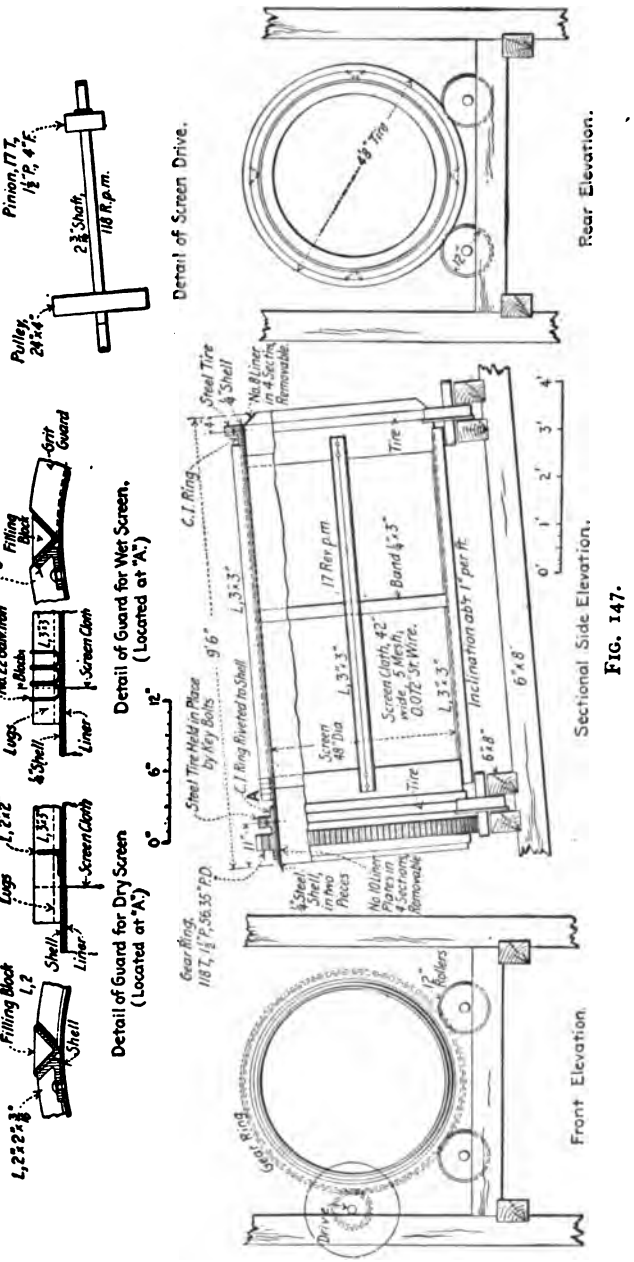

FIG. 147.

matter to arrange the supporting frame so that the slope of the machine could be altered at will. In wet screening wash water could be brought in

directly over the bank where it would be more efficient. Changing screens without removing the trommel would also be a simpler operation than with a trommel with spiders. See Fig. 147.

Spiders should always be split, no details of solid-hub spiders which are still largely used, being shown. The solid-hub spider is particularly objectionable in wet work, for they frequently become so rusted on the shaft that the hubs can only be started with a charge of powder and to remove the central hubs requires that the other hubs be stripped from the shaft. The solid hub would not be so objectionable if it did not frequently become

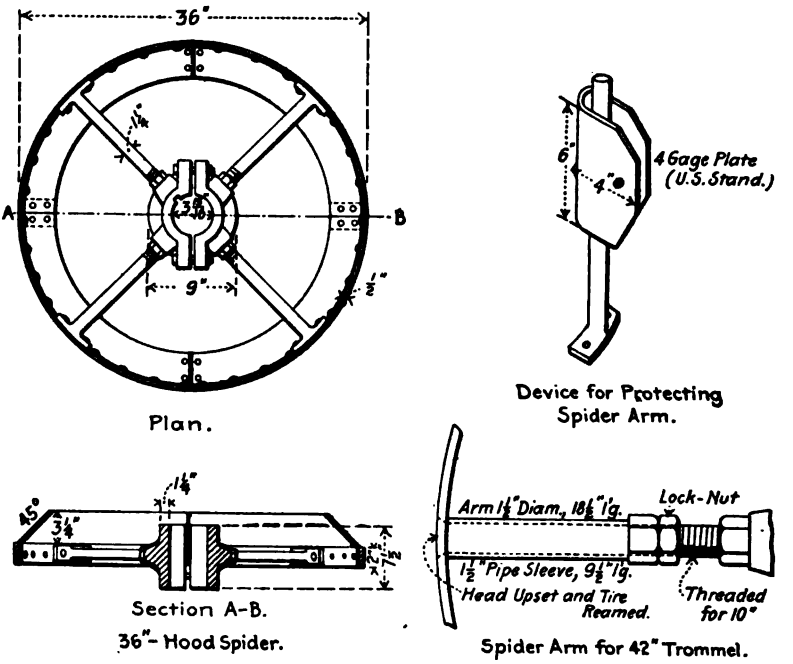

FIG. 148.

loosened on the shaft and badly worn before its condition was discovered. In such an event, the shaft must be stripped to get it off, and the old hub must be replaced by a new. The solid hub spider arms are almost universally of the type shown in Fig. 148 ("36 in-Hood Spider"), the arm ending in a cross at the tire, and being secured to the tire by rivets. In this arrangement, if the arms wear through near the tire where the abrasion is most intense, the only remedy is to remove the whole spider and substitute a new one. After the arms are worn through, they are sent to the blacksmith shop where new crosses are welded on and these are riveted to the tires. Protective pieces, such as that of Fig. 148, are sometimes secured to the arms, but these merely prolong the life of the

arms and inevitably with the continuous operation demanded of mills for long periods, wear proceeds through the covering piece and the arm, necessitating the whole removal of the spider. To obviate this, the type of arms shown in Figs. 142 and 148 can be employed with either solid- or split-hub spiders This consists of a protective pipe sleeve which slips over the arm, the latter being upset at the tire end so as to form a tapering head which sets in a reamed recess in the tire. The arm screws into the hub and is locked at this point with nuts. To prevent the tire from slipping

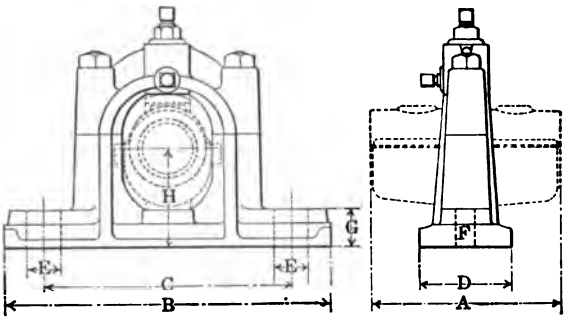

FIG. 149.

BABBITTED—ENDS OF BEARINGS FACED
PRICE LIST AND DIMENSIONS

Diam. shaft inches	A—Inches plain	A—Inches ring-oiling	B—Inches	C—Inches	D—Inches	E—Inches	F—No. and size of bolts	G—Inches	H—Inches plain	H—Inches ring-oiling	K—Inches	Weight. lb. R. O.
1-15/16	7	8	12-1/2	9-1/2	3-1/2	1-1/4	2—5/8	1-1/2	3-1/2	4	.....	30
2-3/16	8	9	13-1/2	10-1/2	3-3/4	1-1/4	2—5/8	1-3/4	3-7/8	4-3/8	.....	40
2-7/16	8-3/4	10	14-1/2	11-1/4	4-1/2	1-1/2	2—3/4	2	4-1/4	4-3/4	.....	55
2-11/16	9-5/8	11	16-1/2	12-3/4	5-1/4	1-3/4	2—7/8	2-1/4	4-3/8	5-3/16	.....	69
2-15/16	10-1/2	12	16-1/2	12-3/4	5-1/4	1-3/4	2—7/8	2-1/4	4-5/8	5-3/8	.....	83
3-3/16	11-3/8	13	18-1/2	14-1/4	6	1-3/4	2—7/8	2-1/2	4-7/8	6-1/16	.....	95
3-7/16	12-1/4	14	18-1/2	14-1/4	6	1-3/4	2—7/8	2-1/2	5-1/4	6-1/8	.....	100
3-11/16	13-1/8	15	21	16-1/2	6-1/2	2	2—1	2-3/4	5-1/2	6-3/4	.....	166
3-15/16	14	16	21	16-1/2	6-1/2	2	2—1	2-3/4	5-11/16	6-7/8	.....	175
4-7/16	15-3/4	18	23	18-1/4	7	2-1/4	2—1-1/8	3	6-1/16	7-1/2	.....	235
4-15/16	17-1/2	20	25	20	7-1/2	2-3/8	2—1-1/4	3-1/4	6-5/8	8-1/4	.....	307
5-7/16	19-1/4	22	28	22-1/4	8	2-5/8	2—1-3/8	3-1/2	7-5/8	9	.....	390
5-15/16	21	24	31	24-1/2	8-1/2	2-3/4	2—1-1/2	3-3/4	8-1/8	9-3/4	.....	500
6-1/2	19-1/2	22-3/4	29	23	9-1/2	2	4—1	3-3/4	8-1/2	10-1/2	5-1/2	605

Sizes 6-1/2-in. and above have four bolts in base, K being distance between bolts on each side of bearing. Weights given are ring-oiling bearings.

down over the arms, the latter is threaded below the pipe sleeve portion and the tire, arm and sleeve held in place by nuts. To remove a single arm, the nuts immediately below the pipe sleeve are screwed down to a lower position, letting the pipe sleeve down and this leaves a space on the arm at the tire on which to use a Stillson wrench, thus enabling a workman to unscrew the arm at the hub.

I have found steel hoods riveted to the regular spider to make a better arrangement than an all cast-iron hood and spider combined, the former

being lighter, cheaper and more durable than the latter. A four-arm and six-arm spider are shown in Figs. 141, 142 and 148.

For a 48-in. trommel 6 ft. long, a shaft 2–11/16 in. diameter will be ample. For a 9-ft. length a 2–15/16 in. shaft will give sufficient rigidity. Plain bearings with plain cast-iron grease cups can be used on the main bearings of trommels, but they will have to be supported on an inclination. The customary bearing is of the type shown in Fig. 149 and adjustable as to slope. For driving the most satisfactory arrangement is the individual drive through a bevel wheel and pinion, each pinion shaft being provided with tight and loose pulley. For a long trommel line containing three or more screens, the arrangement of the countershafting for this mode of driving will be more complicated than in other modes of driving, but it is worth it from the ease with which each trommel can be turned over in making repairs. Direct-belt drive from a slow-turning horizontal shaft has been proposed and successfully used, but it will usually be found that this arrangement requires that the drive shaft be turned 90 deg. to the general arrangement of the mill shafting, and it will generally be necessary to make reduction in speed through a number of countershafts. Further, this mode of driving requires very high crowning, both on the driving and driven pulleys. Sprocket chain driving has most of the disadvantages just enumerated for direct belt driving; in addition special attention is required to take up the slack due to wear on the links, and there is difficulty of disengaging the chains when it is desired to turn the trommel over when making repairs. I cannot forbear repeating again the warning against the transmission of power to a trommel line through gearing, connecting the different screens, the power being transmitted through a single belt to one trommel and this driving the others through the gearing. A print of this arrangement would make it quite clear, but I forbear to take one from any particular manufacturer's catalogue for fear of casting upon him a larger portion of odium than is deserved, since the "merits" of this design, with small changes of detail, are set forth in the literature of many. Its appearance will readily be recognized from the following extract:

"All the old mills of the district were provided with trommel lines driven from a single countershaft fixed above them. This countershaft drove, by bevel gearing, a center trommel, and motion was transmitted to the others by means of gearing. This mode of driving is still to be seen in a few places; in others it has been changed to sprocket, or other forms of drive. In the newer mills individual driving of the trommels is practised. In the old mode of driving each trommel, except the lowest, was provided with three gear wheels; one at the top, an idler in the center and a lower gear wheel. The upper gear wheel was keyed to the end of the trommel shaft, and the lower gear wheel to the reverse end of the trommel below. The shafts rested in bearings, set in slots in the vertical arm of a cast-iron cross. The idler between the gear wheels was supported on a pin inserted in the center of the cross, the latter being supported by bolts passing through the ends of the horizontal

arms and the inclined timbers of the trommel line. The supporting surface for the pin in the cross, on which the idler rotated, was entirely inadequate, and in service, the racking movement produced in the idler speedily loosened the nut which held the pin in the cross and the idler dropped upon the lower gear wheel. Also the teeth were more worn at the edges than in the centers. Then, too, the lower gear wheel received the splash from the launder below it, and grit was transmitted from it to the other gear wheels. In making repairs on one trommel it was necessary to turn over the whole trommel line, and I have frequently seen a great portion of a mill crew exerting all their strength on a crow bar placed in the spokes of the drive pulley, vainly endeavoring to turn over a trommel line driven in this way. Why such a wretched piece of design persists is a mystery to me."[1]

The details of the mode of holding the idler pin in the cast-iron cross are shown in Fig. 150, the part *A* fitting into the cast-iron cross. Since the above was written, my attention has been called to the fact that some makers provide a firm bearing for the idler, but the fact remains that this mode of drive is costly, consumes much power through friction, and interferes with good arrangements of housing and rapid repairing.

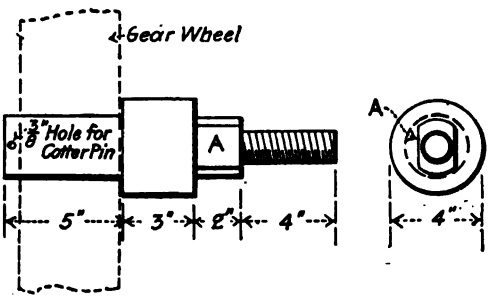

FIG. 150.

With cylindrical trommels the mode of securing the plate or cloth to the spiders is by bands which pass around the plate or cloth over the portion resting on the tire of the spiders. The securing of the trommel plate requires some patience. The thicker plates are always made in two pieces, since to open them sufficiently to go over the spiders would be difficult if made in one piece. This would put a crimp in them which could not be beaten out after the plate was in place on the spiders and a loose fit would result. All trommel plates must be of sufficient length so that they will lap 2 or 3 in. where they come together. In placing a section of plate, log chains will be found convenient. These can be bought in any desired length and have a ring at one end and a hook at the other. When the plates are in place, the chain can be put around them and the hook caught in a link, then a bar can be inserted between the chain and plate and the chain twisted to tighten the plate. The other sections having been similarly put in place and tightened, the trommel bands can be put on and by using the chain

[1] *Eng. and Min. Journ.*, Jan. 1, 1910.

and bar, and turning the trommel slowly and beating the plate and band over the tire, the bar having previously been secured from untwisting by roping it, and at each revolution tightening the band nuts, much slack can be gotten out of the plate and ultimately it will make contact with the spiders with sufficient snugness to insure that it will not slip when in service. When the plate is in place it is additionally secured at the lap by punching holes through the two ends and bolting together with elevator bolts. In placing cloth, unless it be very stout, the means for tightening just described cannot be employed, and about all that can be done is to place the cloth as

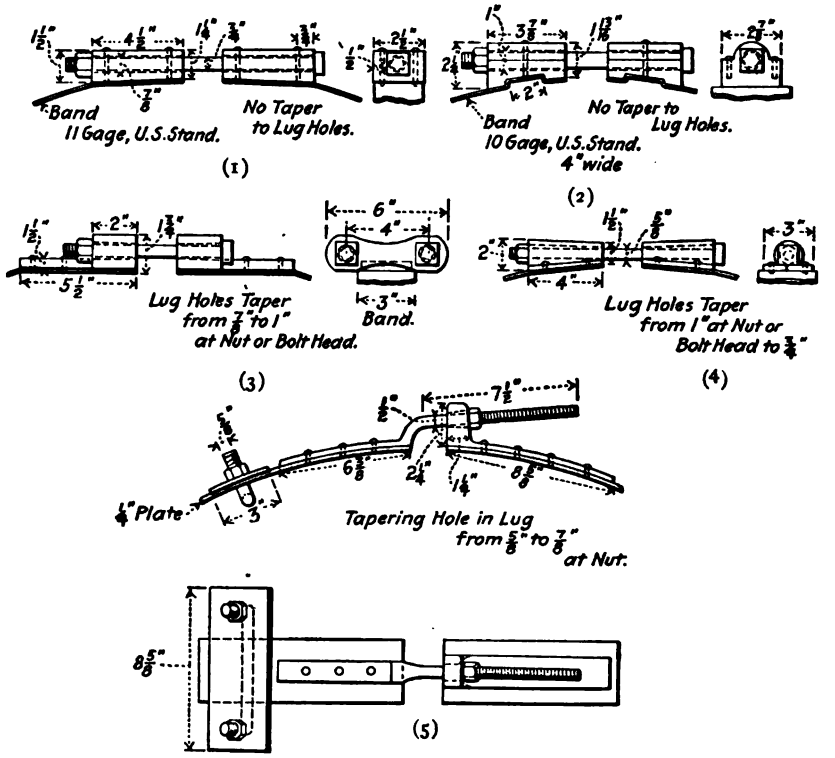

FIG. 151.

tightly as it can be drawn up by hand, or by using a light bar through the screen openings as a lever to draw it up, finally securing it by bands and bolts.

Patching is done by bolting on sections of cloth or plate over the worn places. Since the wear spreads in a peripheral direction, band patches of cloth or plates from 4 to 8 in. wide entirely encircling the trommel and ending in two riveted bent up lugs, pierced to receive a tightening bolt, can be quickly applied and will give better service than a square patch. This kind of patch can be made up in quantity and kept on hand for service.

The wear on trommel plates is so variable, and has so many elements in it, that no prediction can be made as to their life in a new mill. The matter soon determines itself after beginning operations, and the mill superintendent governs the ordering of screens from the facts obtained by actual operation. In many copper mills the chemical attack on the screens is far more serious than the mechanical attack.

Trommel band lugs are shown in Fig. 151; No. 4 I regard as best. A mold will have to be made by the blacksmith in order that these lugs may be fashioned.

In addition to the ordinary inclined cylindrical trommel there are conical and truncated pyramidical forms, with horizontal shafts and their principal advantage lies in the fact that the shaft being horizontal, the means of driving are a little simpler than where the shaft is inclined. In the case of the pyramidical form there are a number of flat sides comprising the faces of the pyramid, and in dry screening it is claimed that the bank is tossed and broken up more thoroughly as it slides down the broken surface formed by the pyramidical faces from the different positions of maximum repose. It is also claimed for this arrangement that the different sections of screen are more readily replaced than the sections of the ordinary cylindrical trommel. This may be true as compared with the placing of plate, but can not be true with respect to placing fine cloth for use with which the pyramidical trommel is especially recommended, since the total time required for the individual removals and replacements would be much greater than a single removal and replacement of fine cloth sections on a cylindrical trommel. Where the wear would be very light, as for example, with clay containing a small amount of grit, much finer wires could be used in the pyramidical screen than with a cylindrical screen, since the unsupported span of the cloth would be less. And if further, a vibrating device be attached to the polygonal screen such as a series of trip hammers to strike the outside of the frame, the light wires will be kept in vibration and aid materially in preventing blinding. Argall has stated that to get really efficient screening under such conditions, the vibration must be sufficiently heavy to perceptibly communicate itself to the shaft, the latter being made sufficiently light to permit of its partaking of the motion communicated to the screen. For ordinary dry screening in cylindrical trommels, I have found it helpful to place two or three longitudinal angle lines inside the screening to assist in breaking up the bank.

Some details of housing are shown in Figs. 152 and 153. Fig. 152 shows the housing for the dry screens of Fig. 141. Fig. 153 is the housing for the wet screen shown in Fig. 141. All the housings are of wood, as this is the only permissible material for making housings. Housings are bound to wear through from time to time, as it is impossible to inspect the interior until the mill is shut down for general repairs. If the housing be made of steel, the only remedy for stopping a leak while the mill is running is a wad of waste, but if the housing be of wood a strip of wood may be nailed over the

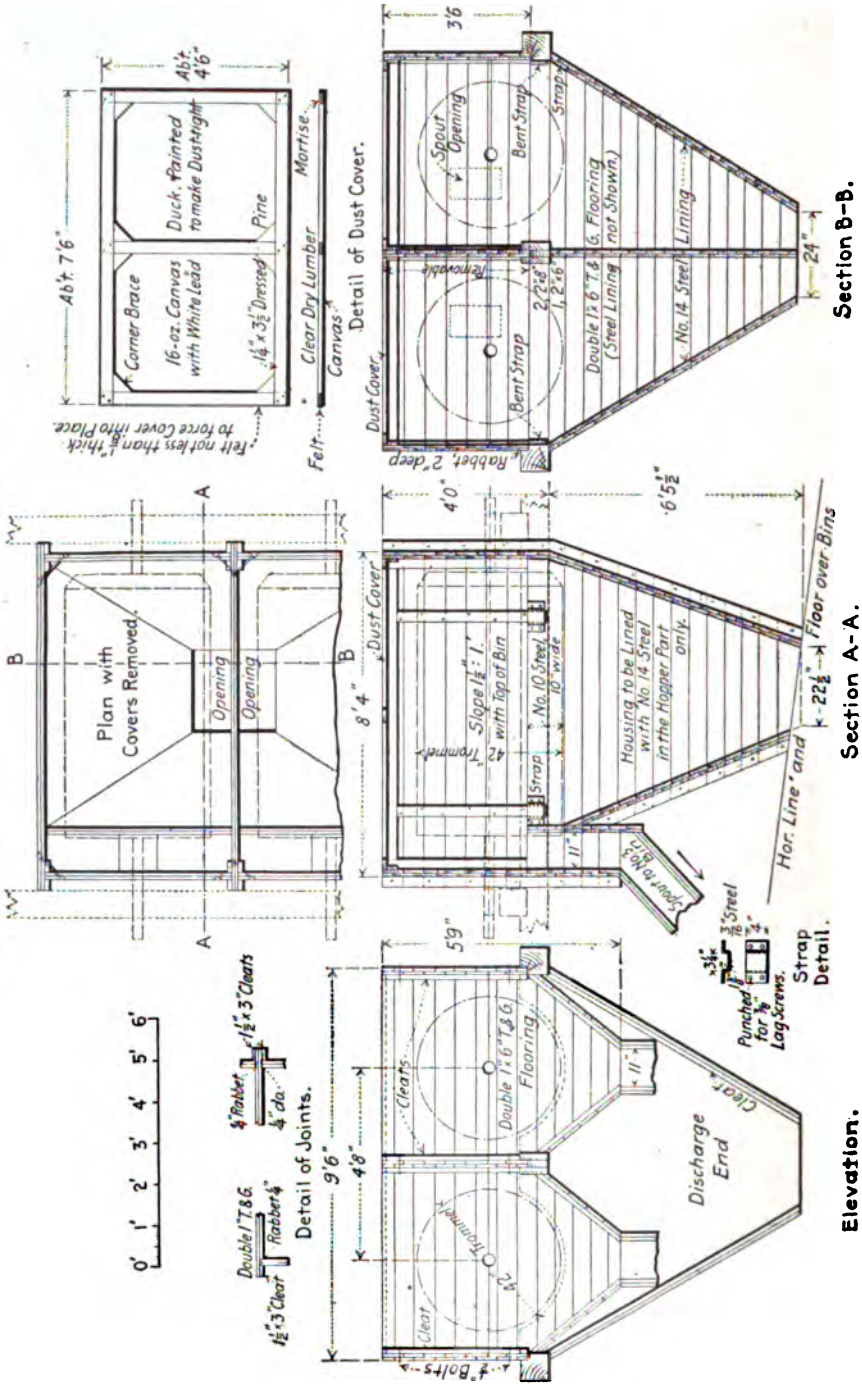
Plan with Covers Removed.
Opening
Opening
Detail of Joints.
Double 1" T.&G.
Rabbet
1½"x3" Cleat
Rabbet
1½"x3" Cleats
Rabbet
Rabbet
Discharge End
Cleats
Double 1"x6" T.&G. Flooring
Trommel
Cleat
Cleat
Dust Cover
Slope 1½":1" with Top of Bin
No. 10 Steel 10" wide
Strap
Housing to be Lined with No. 14 Steel in the Hopper Part only.
Spout to No. 3 Bin
Hor. Line and Floor over Bins
Punched for ⅜" Lag Screws.
Strap Detail.
Detail of Dust Cover.
Corner Brace
16-oz. Canvas with White Lead
Duck, Painted to make Dust-tight
Pine
Clear Dry Lumber
Mortise
Canvas
Felt
Felt not less than ⅛" thick to force Cover into Place.
Ab't. 7'6"
Ab't. 4'6"
Spout Opening
Bent Strap
Strap
Removable
Double 1"x6" T.&G. Flooring (Steel Lining not Shown.)
No. 14 Steel Lining
Rabbet, 2" deep
Dust Cover
Section B-B.
Section A-A.
Elevation.

FIG. 152.

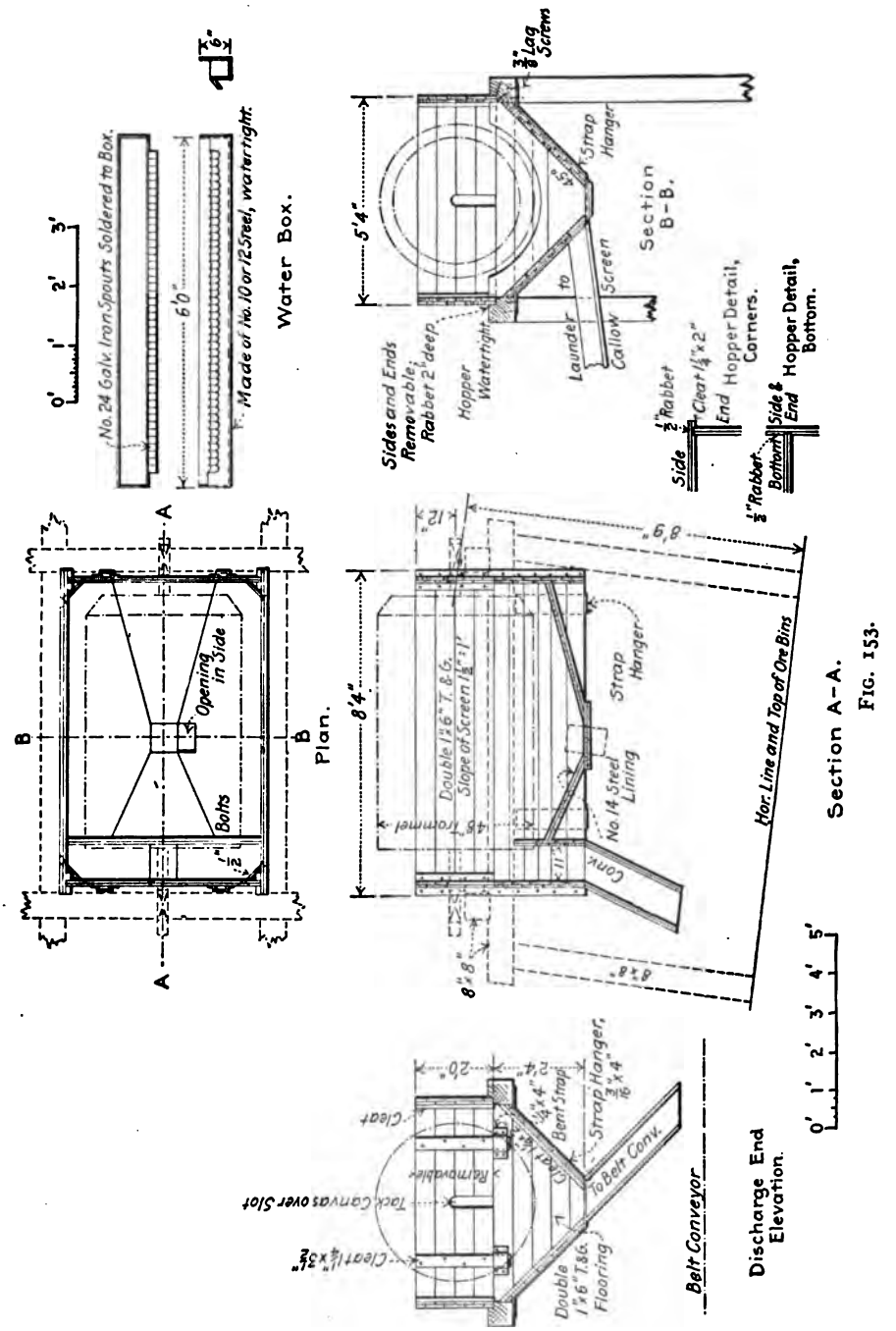
Water Box.
No. 24 Galv. Iron Spouts Soldered to Box.
Made of No. 10 or 12 Steel, watertight.
Plan.
Opening in Side
Bolts
Section B-B.
Sides and Ends Removable; Rabbet 2" deep.
Hopper Watertight
Launder to Callow Screen
Strap Hanger
Hopper Detail, Corners.
Hopper Detail, Bottom.
Section A-A.
Double 1"x6" T. & G. Slope of Screen 1½":1'
No. 14 Steel Lining
Hor. Line and Top of Ore Bins
Discharge End Elevation.
Belt Conveyor
Tack Canvas over Slot
Removable
Cleat
Strap Hanger
To Belt Conv.
Double 1"x6" T.&G. Flooring

FIG. 153.

hole until a shutdown for repairs occurs, when a neat and unnoticeable repair may be made. The permanent repair to the steel housing has to be made with a piece of plate and rivets and is expensive and unsightly. Housings must be roomy; the clearance of the screen should be 25 per cent. of the screen diameter and not less than 20 per cent. on each side. The housing should be removable all around down to the central line of the trommel. If individual driving is employed, the repairing operations may be materially lessened in point of time if there be spare sets of shafts with gear wheels and spiders attached, the whole skeletons being assembled ready for use. One or more I-beams should be mounted over the trommel line so as to furnish trolley tracks leading to a loft floor where spare trommel parts are kept and means for assembling them. As the general repair day approaches, it will be found

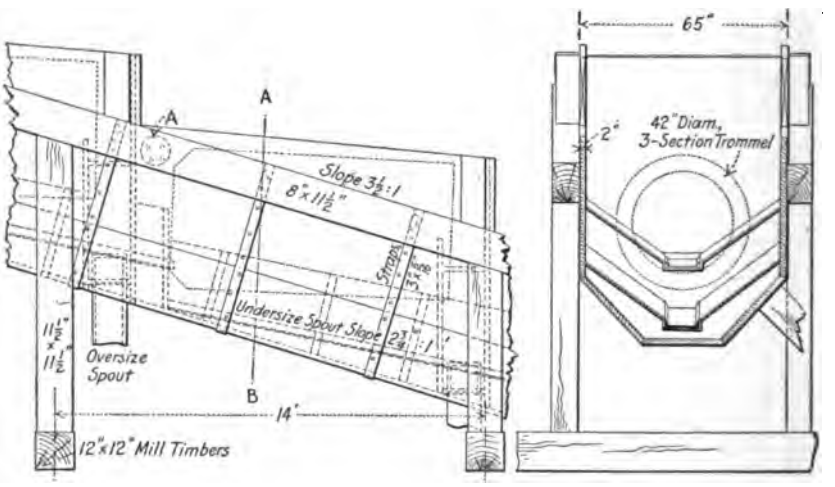

Side Elevation. Section A-B.

FIG. 154.

that certain screens need entirely new cloths or plates; the hubs of certain spiders are loose on the shaft; the arms of certain spiders are worn through, etc., necessitating a general repair, which if done in the usual way, would occupy a number of men all day. Some of the spare trommels will then be recovered and when the shutdown takes place the bearings can be loosened, the worn trommel picked up with chain block and tongs, and taken to the repair loft, and the newly equipped trommel be brought in and substituted for it, an operation requiring less than an hour's time. The slope of the undersized spout of the housing should be 2–3/4 in. to the foot or more for wet work. For dry work it must be at least 45 deg., but as the usual equipment of screens in the crushing plant is but one or two sizes of screens, and these are often not placed in series, much loss in head room will not be suffered.

In addition to Fig. 153 for a single wet-screen housing a view is shown in Fig. 154 of an arrangement of housing for a wet trommel line.

This design presents some excellent features, such as the continuous timbers supporting the housing, which is suspended from it by steel straps, and the simplicity with which the whole arrangement can be supported from the main mill frame. The only bad feature, but one easily remedied, is that the housing rises too high, this design being taken from actual practice where driving was affected by transmitting the power from a single belt through the trommel shafts by gearing, and inclined timbers were employed to support the ends of the gear cross as indicated at *A*. It will be noticed that the centers of the trommels fall below the top of the inclined timber, hence it would be perfectly possible to lower these timbers relatively to the trommel, to furnish a support for the bearings, while at the same time leaving more space above to be closed in with removable pieces. With these modifications the design has much to recommend it.

In wet trommels water is applied on the upcoming side at a point above the trommel by a spray or water box. A spray consists of a pipe occupying the length of the trommel, pierced with holes and provided with a valve for regulating the flow of water, and with a coupling ahead of the valve so that the pipe may be taken off when making repairs. There is also a reducing tee

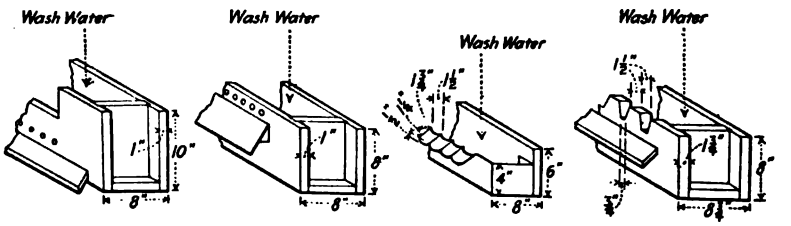

FIG. 155.

and valve, and a short length of pipe ahead of the valve for providing water for washing down the oversize leaving the end of the screen. Unless the water be perfectly free from acids, solids or salts, which will settle or precipitate out in the spray pipe or corrode it, such as ferrous sulphate precipitating in the form of hydrate of iron, or unless the water be under considerable pressure, with any of these impurities, the small spray holes in the pipe will close up. Usually water for washing purposes will contain too much impurity to use in the form of a spray, and resort must be had to water boxes which run the whole length of the trommel and are most conveniently supported on brackets attached to the removable side of the housing. Various forms of box are shown in Fig. 155. The third one shown in the figure, I regard as the best, and the same device is illustrated in the details of the wet trommel. It will be found excellent where there is slime in the wash water, which settles out, filling the box; or where there is much trash in the wash water, for there is little or no obstruction to overflow. The distribution of the water from this box in a thin sheet is excellent.

Water is used on screens to break up the adherence of grains coated with a film of water which would be their condition in wet screening immediately after the ore had entered the trommel, and the bulk of the entering water had drained away through the screen holes, leaving a mass of sticky cohering particles. This cohesion increases as the ore fed becomes smaller in diameter. A further advantage in the use of water lies in its carrying through the screen apertures the fine grains from the top portions of the bank. Water whether introduced from a water box, or spray, will follow mostly down the inside of the screen and flow in a sheet under the bank; this keeps the area in contact with the screen throughly loose, lubricates the sides of the openings, tends to point the grains with their long axis toward the holes, and by lowering the weight of the grains prevents those but little larger than the aperture from lodging firmly in the aperture, causing blinding. In the trommel as compared with the flat screen, water is more usefully applied. In the case of the latter owing to the grains being spread out in a thin layer, the water is not held at the screen to any extent, keeping the mass of ore fluid; in fine screening, with flat screens, when the ore is caused to progress by imparting a reciprocal motion to the screen, or by inclining it sufficiently, so that it will progress by gravity, unless an excessive amount of water be used, the sand will tend to accumulate in balls and clots and proceed over the surface of the screen in this way, very much to the detriment of the work of screening. The fault of the trommel in making a thick bank, in which many undersize grains have no chance or few chances to get through the apertures, greatly offsets the better applicaton of water. Trommels screen better wet than dry, but this cannot be said of many flat screens on the market. The best condition for good and rapid wet screening would be to have the screen submerged in water, but so far no invention has been made for doing this which has been successful in disposing of the under and oversize; either there has been too large a use of water to accomplish this, or if mechanical means have been employed to effect this end, they have been impractical.

The power required for ordinary trommels may be reckoned at 1/4 h.p. for every 2 ft. of length. The water required for wet trommels will be 2 to 2–1/2 gal. per minute for every foot of length.

Flat Screens.—Flat screens, including shaking grizzlies, have theoretical advantages over trommels for dry screening. Shaking grizzlies are only employed in the crushing plant and should properly have been considered under that head, but the balancing of these devices, as well as of other types of shaking screens, is a matter of the utmost importance, and in order to treat it generally, shaking grizzlies have been considered under this chapter, with other types of shaking screens.

Shaking Grizzlies or Screens.—The ordinary shaking grizzly consisting of a number of detachable grizzly bars, set in a steel frame, which is in turn mounted on rollers, or rock legs, can be balanced, but the mechanical diffi-

culties of doing this, owing to the great weight of such arrangements, are so great that it is not attempted. If such a heavy unbalanced arrangement be mounted at some high point in the crushing plant, the vibration or operation may be so destructive both to the machine and framing, as to necessitate the removal of the grizzly. Lighter unbalanced screens, while they do not set up vibration in the mill framing to a destructive degree, though certainly to a disagreeable degree, do damage to the machine itself. If heavy unbalanced shaking grizzlies are mounted on an unyielding framing, or foundation, independent of the main framing, then they can be used. A heavy mass foundation, such as concrete, is better. As between a machine of this kind and a heavy revolving grizzly, the choice should be with the latter.

In order to understand the effect of an unbalanced mass moving backward and forward in the same path, consider the mass W, acting backward and forward in the path a–b, Fig. 156. When either at the point a or b, the inertia of the mass tends to carry the point O where the mass W is secured to the mill frame in the direction of the movement toward a or b, as the case may be, and the framing will partake more or less of the forward and backward movements, or is set in vibration. Now if at a point below O and at a distance from it equal to d, an equal weight W' is secured, and when W is at a, W' is at b', or when W is at b, W' is at a', or in other words, if W' is moving in opposite directions to W and at any point in their paths have equal velocity, then evidently there can exist no tendency to move the framing, since the amounts of momentum M are equal but in opposite directions. For balancing, since $M = \frac{Wv}{g}$ and $M = \frac{W'v'}{g}$; therefore $\frac{Wv}{g} = \frac{W'v'}{g}$, that is, the balance weight can be varied, providing the product, $W'v'$ remains constant. If for example, a screen weighing 500 lb. rests on a rock shaft, and its rock legs of length 1 ft. are extended downward to a counterweight, then the counterweight for an exact balance must weigh 1000 lb. if the length of its leg to the center support is 6 in., for the velocity will only be one-half that of the screen; or the balance must weigh 250 lb. if its length of leg is 2 ft., the velocity will then be twice that of the screen. An almost perfect example of balancing is a well made power pulley, for here under rotary motion, on one side of any line passing through the center is a force[1] $\frac{\alpha}{g} W\rho$ where α is the angular velocity and ρ the radius of gyration of the half mass of the pulley or W/g to one side of the line, passing through the center and moving in one direction, and there is an equal force acting on an equal mass the other side of the line, which moves in the opposite direction; hence there is perfect balance. A trommel presents some analogy to the

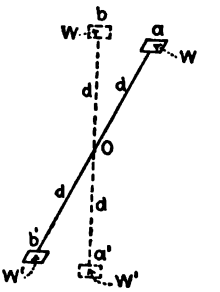

FIG. 156.

[1] The force to create the velocity α in a unit of time.

pulley in its perfect balance. It must be evident that a balanced shaking screen must have its supporting members of sufficient strength to resist the inertia produced by shaking, or, in other words, of sufficient strength not to vibrate under the backward and forward motion. There will be a slight tendency in a balanced screen for nuts to loosen and none in the trommel, but this is merely mentioned as a tendency for it is too feeble to be of any moment. Vibration exists to a destructive degree in an unbalanced screen, since vibration of great frequency and short amplitude are set up.

The force and power required to move the counterweight is not very great and may be less than required to move the screen itself. To understand this let W, Fig. 157, represent the weight of an unbalanced screen, its path being AC, the fulcrum point for support being at O. In its path the screen passes midway the vertical line OG, and evidently the force required to overcome gravity must act through the distance DG, as the screen rises to the position G, but the work required to overcome gravity will be balanced by that given out when a screen falls to C in advancing to D; hence the only net force is $F = \frac{Wv30}{gN}$. Where v is the maximum velocity in feet per second to which the screen obtains and N r.p.m. of the driving mechanism. If a counterweight W' be employed evidently its gravitational work will be balanced in the same way, but in a reverse order, and the total net force required would be $\frac{Wv60}{gN}$. This expression represents the force required, neglecting friction to move the balanced system in any plane and from any angular position of the two connected masses. Now if the unbalanced screen W be in any position in the arc OGH other than the one just described, such as at J, it is evident that force W must be employed to raise it from one position in its path along GH; hence the total force is $\frac{Wv30}{gN} + W$. Now if this expression is equated to $\frac{2Wv60}{gN}$ the expression for force for moving the balanced system, the velocity will be determined when forces are equal, or $v = \frac{gN}{30}$. The energy of the balanced system is $\frac{2Wv^2}{g}$ and of the unbalanced $\frac{W}{g}(v^2 - 2gs)$; equating these two expressions, $s = \frac{v^2}{2g}$, where s is the vertical height, W is raised. It has been assumed that the unbalanced system gives out no energy. On the return of the unbalanced weight, the power consumed in raising it anywhere in the arc OGH will be given out just as in the first case where the screen rested on rock legs, which were vertical when the machine was in the middle of the stroke, provided there are proper mechanical means to this end. But it is to be observed

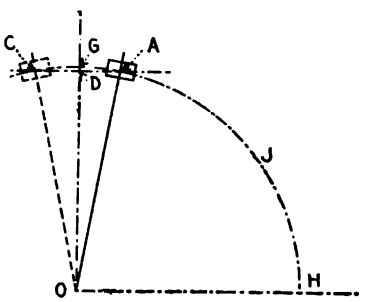

FIG. 157.

that even under the best mechanical arrangements not all the power would be returned, and it is easy to conceive of mechanical details where none of the energy expended would be returned. For example, suppose the unbalanced screen or weight be actuated by a cam placed directly on the drive shaft, then evidently no return of energy expended will be given. If weight or screen is at G, that is, the rock leg is horizontal, then evidently if no energy is returned this position of the weight or screen causes the greatest consumption of energy. As the initial position of the weight approaches H,

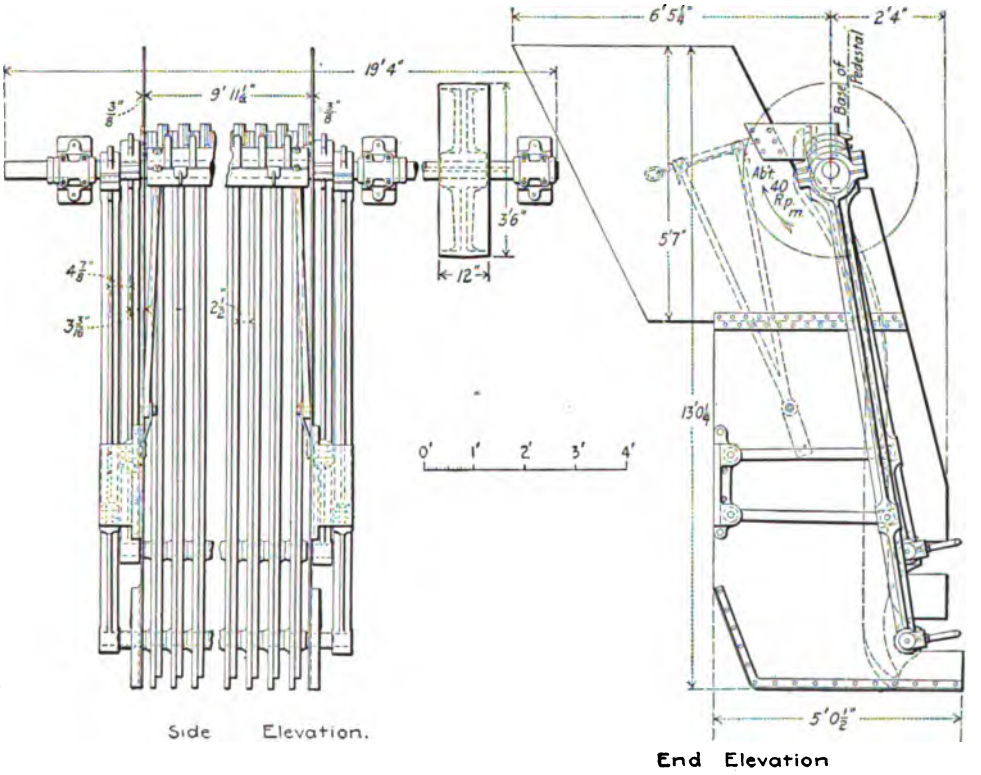

FIG. 158.

a position will be obtained that is satisfied by $s = \frac{v^2}{2g}$ where the power required by the balanced and unbalanced system would be equal, and the same reflection may apply where the unbalanced system gives out only a portion of the energy consumed.[1]

The Coxe shaking grizzly overcomes very readily the disadvantages of balancing the screen and frame as an entirety, by having two sets of bars in

[1] The formulæ above do not apply unless there were reversal of the screen motion. In moving forward the screen starts with a velocity zero, obtains a maximum v_i, the velocity then retards to zero at the end of the stroke.

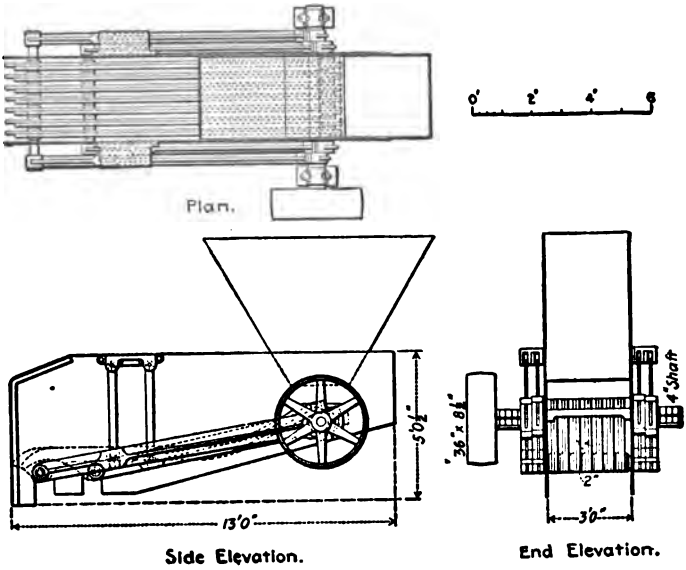

FIG. 159.

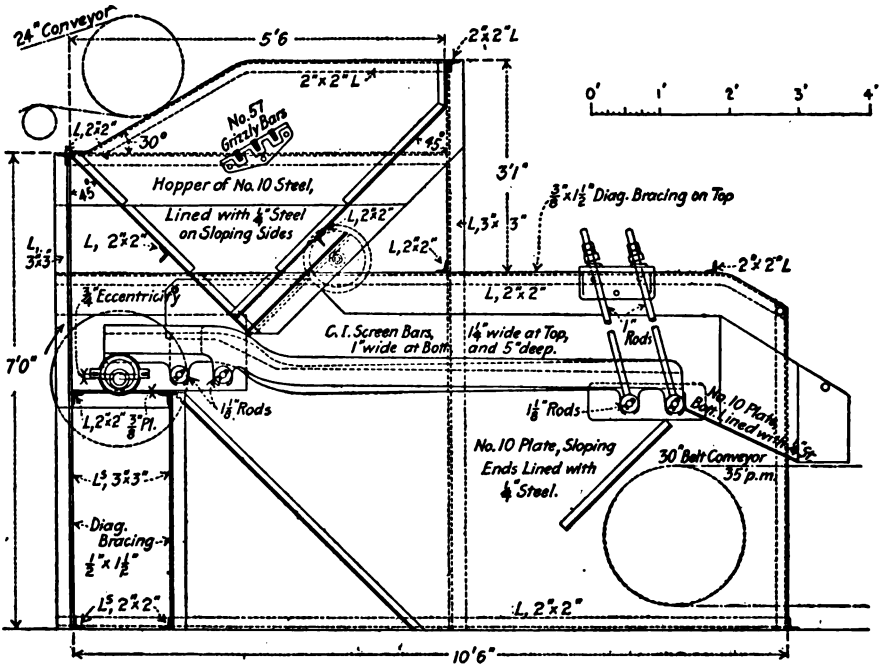

FIG. 160.

balance, one set moving back as the other advances forward, and each set being actuated through two sets of eccentric bars at each side, one pair being actuated by the same eccentric shaft and with eccentrics in the same fixed position; the other two by eccentrics on a second shaft, but 90 deg. apart from the first pair. These grizzlies as a careful inspection will show, see Figs. 158 and 159, have an elliptical motion, the ellipse being much flattened, the long axis of stroke of the bars being 3 in. and the short 1–1/2 in. This results in the material fed being given great forward advance without the bars being placed on a slope. It is impossible for an individual piece large enough to ride two bars being carried backward, for these bars move forward 3 in., and the other pair rising and moving forward 3 in., tend to carry the piece forward, a total of 6 in. for a complete rotation of the two eccentric shafts. Where as in Fig. 160, one set of balanced bars moves backward while the other set moves forward, it would not be so good as the Coxe bars in point of advancing the material, and would have to be set on a slope to obtain capacity. On the other hand, they would probably screen faster

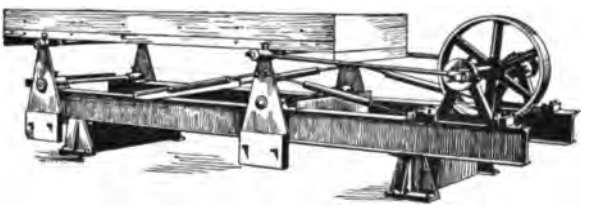

FIG. 161.

and better. The Coxe grizzlies are much used in the anthracite field in Pennsylvania and have a capacity of about 3.65 tons per 24 hours per square foot of oscillating surface.[1] Fig. 159 shows a spread of surface better proportioned for ore mill work. If the capacity is 3.65 tons for coal and slate it will be somewhat greater for ore, which is of greater specific gravity. It will be noted that each pair of bars is in contact and some criticism of the Coxe arrangement can be made if it is to be used with quartz ores, owing to the possibility of considerable wear and friction resulting from grit working down between the bars. I do not believe this would be a serious objection to their use. In any design of this character the bars should be readily detachable so that they can be replaced when worn.

Flat balanced screens are now made by a number of makers, a view of one being shown in Fig. 161, and there seems no good reason why these machines should not take the place of trommels in the crushing plant, provided they are properly housed and the bearings protected against the entry of dust and grit. To this end the bearings should be placed outside the housing and the counterweights might conveniently be placed within the housing, where they

[1] Letter from F. M. Chase, Vice Pres. and General Manager, Lehigh Valley Coal Company.

would be out of the way. If the screen is mounted horizontally it will require a sharp differential motion to advance the grains. A plain backward and forward movement will serve to advance the material, provided the screen is given sufficient slope, but is not as good as the differential movement for turning the grains into different axial positions. A sloping flat screen moved by a plain jig eccentric is a very "dead" screening device. If the screen be mounted on legs which are inclined toward the motion mechanism at the beginning of the stroke, and vertical legs at the end of the stroke, then a differential will be obtained even when the actuating mechanism merely gives a backward and forward movement, for the reason that the screen is uniformly accelerated to the end of the stroke and uniformly retarded in coming back. Such is the arrangement in the Ferraris screen, the screen being mounted on a number of flexible legs. If the driving mechanism of a flat screen be mounted as is the Ferraris screen, and in addition it be actuated by good differential head mechanism, excellent screening conditions will be obtained.

In making tests on a scale too large for hand screen, I have found it convenient to make a rock frame mounted off the floor to hold 3 × 6-ft. screens. The screens are attached to simple cleat frames with handles at either end to assist in placing or removing them from the rock frame. The rock frame legs were inclined away from the end, which was grasped by the hands in shaking the screens, and at the far end the screen was supported by springs and a bumper. At each stroke the screen came sharply up against the bumper. By these means the bed of ore on the screens was kept moving in a lively manner, but not in such a way as to advance it in any particular direction. A few strokes sufficed to remove the undersize, when the light cleated frame with its load of oversize could be lifted out of the rock frame and discharged on to a sheet of canvas laid on the floor. Without the springs and bumper the frame was too heavy to be shaken fast enough to produce a lively motion in the grains fed. The rock frame stood about waist high above the floor.

In the impact screen manufactured by the Colorado Iron Works, motion of the grains is obtained by giving the screen a high slope 45 deg., and rapid vibrations are given by two ratchet or multiple cam-wheels working against springs, the direction of vibration being at right angles to the screen. The effect of this motion is, of course, to assist in progressing the material down the screen, but its primary intent seems to be to turn the grains into different axial positions.

The advantages of flat screens over trommels for dry screening are many. The individual undersize grains are practically independent of and do not interfere with one another in their progress across the screen and hence have the best possible chance to get through the apertures. Again it is quite possible to make the grains in their progress over the screen take a multiplicity of axial positions, an effect deficient in the trommel. The arrange-

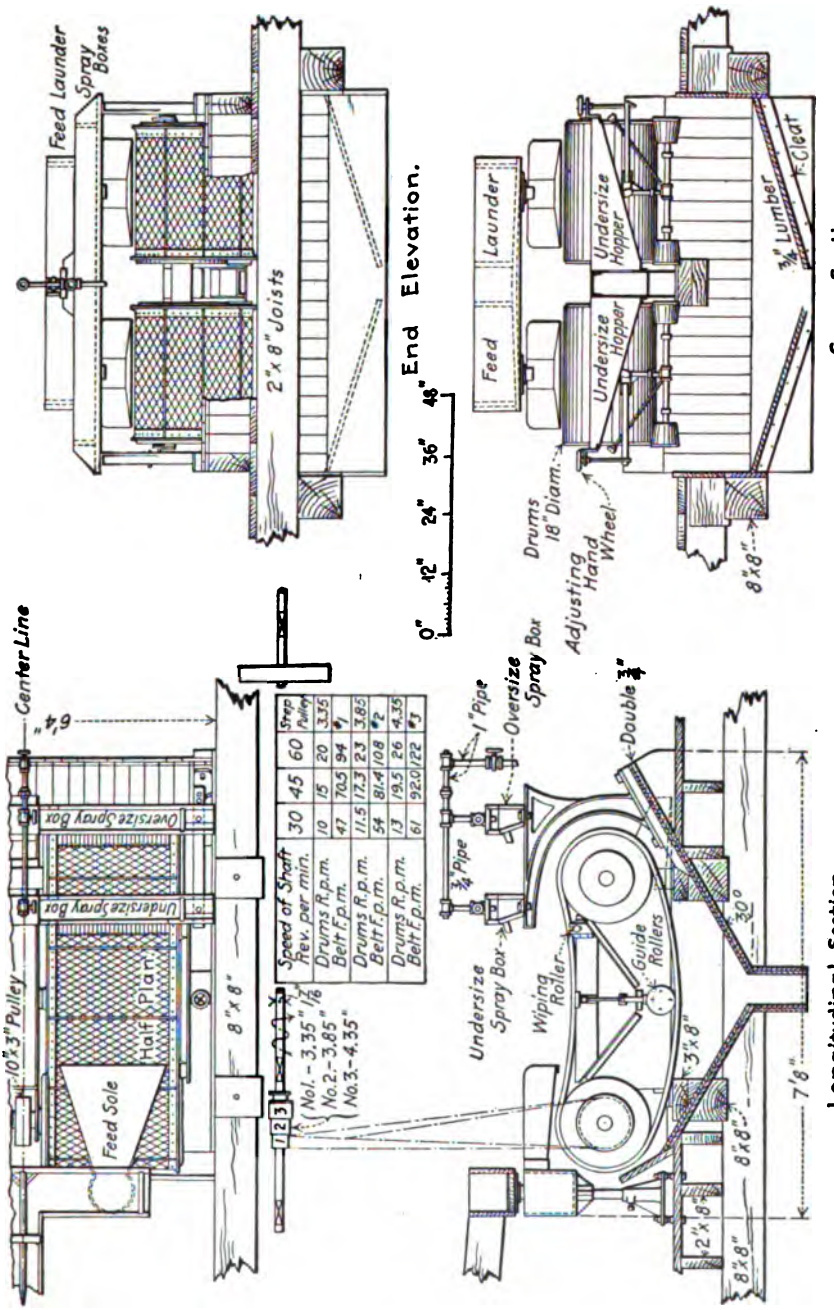
Feed Launder
Spray Boxes
2"x 8" Joists
End Elevation.
0" 12" 24" 36" 48"
Feed
Launder
Undersize Hopper
Undersize Hopper
Drums 18" Diam.
Adjusting Hand Wheel
3/4" Lumber
Cleat
8"x8"
Cross Section.
Center Line
6'4"
10"x3" Pulley
Feed Sole
Half Plan
Undersize Spray Box
Oversize Spray Box
8"x8"
Speed of Shaft
Rev. per min.
Drums R.p.m.
Belt F.p.m.
Drums R.p.m.
Belt F.p.m.
Drums R.p.m.
Belt F.p.m.
Step Pulley
30 45 60
10 15 20 3.35
47 70.5 94 #1
11.5 17.3 23 3.85
54 81.4 108 #2
13 19.5 26 4.35
61 92.0 122 #3
No.1.-3.35" 1/16"
No.2.-3.85"
No.3.-4.35"
1" Pipe
Oversize Spray Box
3/4" Pipe
Double 3/4"
Undersize Spray Box
Wiping Roller
Guide Rollers
3"x8"
30°
7'8"
8"x8"
2"x8"
8"x8"
Longitudinal Section.

FIG. 162.

ments of a flat screen can be made quite simple for repairs and renewals of screen, cloth or plate, and the wear is practically all confined to such cloth or plate. A disadvantage of their use is blinding, but since this indicates active screening it can be looked upon indulgently. The vibration can be overcome by the means that have been already stated. For reasons which have been given the flat shaking screen cannot be used for wet work with entire success.

Callow overcomes many of the objections of flat screens for screening fine, wet material, by having an endless belt screen, see Fig. 162, suspended on two parallel pulleys, or drums, driving being from the rear drum so as to leave the cloth hanging in a curve on top where the feed is received and screened. The feed is received at the rear end in a thin sheet of ore and water, covering the width of the screen belt. The water and much of the undersize at once pass through the apertures of the screen at the point where they first encounter it. The ore then advances toward the head pulley in a dead mass on the screen, it being discharged over the crown of the head pulley. As it ascends the curve toward the head pulley, the final action in elimination of undersize is given by a spray of water, which tends to wash back the undersize to a point where it is out of the influence of the wash water, when it again ascends and may go through the same action and finally pass through the screen cloth. The possible range of the sizes of cloth possible with the Callow is from 16 to 200 mesh. Above a size coarser than 16 mesh the wires will become so stiff that they cannot pass around the drums without a strong tendency to break, and cloth finer than 200 mesh cannot be obtained. Sizes finer than 80 mesh are seldom used owing to the expense of the cloth. The advances made by Callow were first a non-balling means of progressing the ore after it had been dewatered on first encountering the screen; second the improved means for washing described above. For very fine sizes the trommel cannot be used, for the holes would quickly be filled by being smeared over with a sticky paste of undersize grains and after this occurred, screening would cease. Callow's screen was the first practical power machine which gave good commercial results on finely divided wet ore, and it still maintains its supremacy in its field. It will readily be seen that the work of the machine cannot be of a high theoretical order, because there is very little change in the axial position of the grains from entry to exit point. I will say, however, that an examination of the oversizes by an eye inspection, seems to show excellent results, but I am of the impression that if the oversize grains were magnified, say 100 times, the work of the machine would then appear unfavorably as compared with good coarse sizing.

Tests of oversizes by hand screens do not yield results that can be regarded as trustworthy, as will be apparent from the following reasons: Suppose tests are made on the oversize of a screening machine with apertures 1 in. wide. It will be possible on the hand screen with the same size and shape of opening to try the individual grains in different axial positions with the

fingers to see if they will go through the apertures, or, in other words, the efficiency of the testing device for coarse sizes is 100 per cent., but as successively finer sizes are examined, a point in testing is quickly reached where it would be impractical to try the individual grains in this way, since there are too many of them and all are too small to handle. Hence, the testing device is no longer reliable and its reliability rapidly diminishes with decrease in size. With the hand screen properly manipulated the best possible commercial results are displayed and furnish the goal toward which power-driven machines depending on accidental discharge of undersize must work. It has been shown theoretically that the work of fine screens must diminish in efficiency with decrease of size of opening, and hence it could not be expected that the work of the Callow or similar screens, could show results comparable with coarse work, but the point I wish to make is that while the Callow screen and others which attempt to cover the same field of screens, are an advance in the art of screening, the goal will be toward a submerged screen.[1] The field for fine screens has been somewhat limited of late years by advance in the knowledge of the advantage to be obtained by improved forms of grading known as classification. The following designing data concerning these Callow machines is furnished by the makers.

Life of Belts 30-90 Days.—Cost of cloth 0.13 to 1.5 cents per ton of ore screened. Wash water required will not exceed 8 gals. per min. Capacity of duplex machines from 50 to 300 tons per day depending on coarseness of mesh used.

A cloth in which the warp wires are set closer together than the woof, is usually used on these machines, presenting oblong openings, the long axis being parallel to the direction of travel.

For dry screening finely divided and moisture gathering or clayey ores, there are a number of inclined screens on the market, among them being the "Newaygo," manufactured by the Sturtevant Mill Company, and the "Perfect" clay screen, manufactured by the Dunlap Manufacturing Company. The first machine has means for keeping the whole surface of the screen, which is held taut, in vibration. The frame of the machine does not partake of this vibration.

Screenless Sizers.—The McKesson-Rice "screenless" sizer for which patents have been issued to McKesson and Rice[2] covering the field of volumetric sizing, is a machine which is not as yet being sold commercially, but on which tests of a commercial character have been successfully made. Fig. 163 shows a machine for grading coarse sizes up to 6 in. in diameter and Fig. 164, a machine for making gradings below 1/2-in. size. The essential principles governing this machine are first primarily the fact

[1] It is but proper to state that Callow experimented with various types of submerged screens but abandoned such devices in favor of the one described in the text. The principal difficulties encountered with the submerged devices was the entrapping of water above the screen and the bedding down of the ore on the screen.

[2] U. S. Pat. No. 1,044,067, Nov. 12, 1912.

stated in homely language, that a large piece of rock will roll down hill faster and go farther than a small one, an experience with which every school boy is

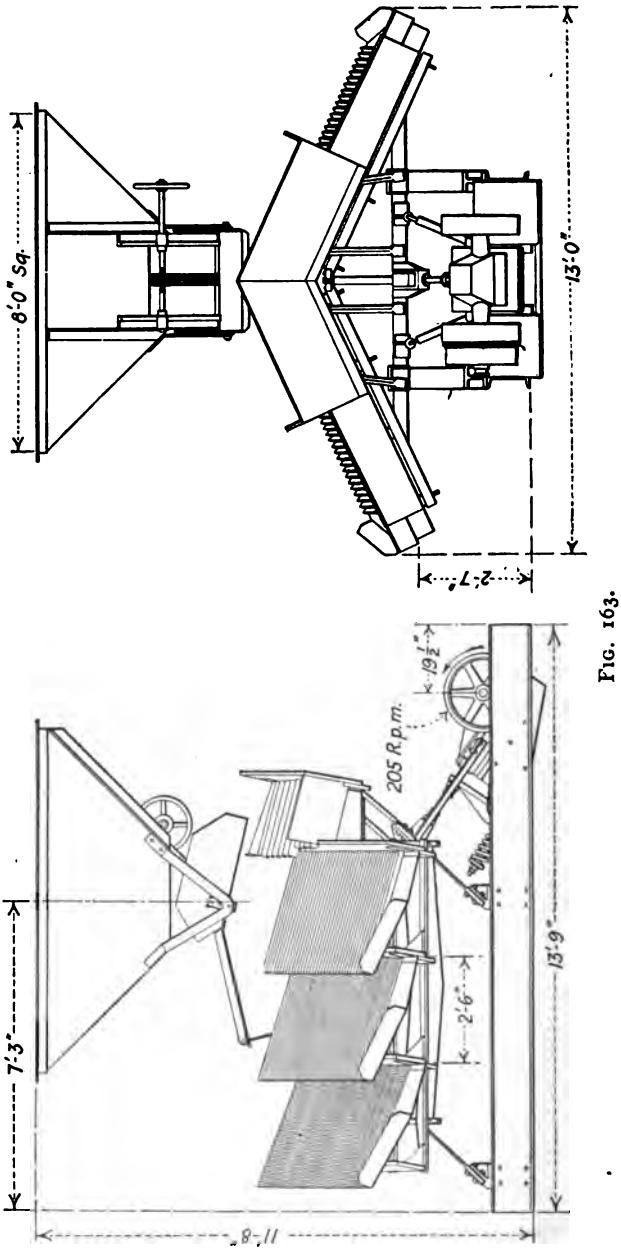

FIG. 163.

familiar. The McKesson-Rice machine consists essentially of an inclined deck which is fed at one upper corner and on which material can be caused to

advance by differential reciprocating motions being imparted to it (in Fig. 163 by a differential head motion) or by the advance movement of a belt as shown in the machine of Fig. 164. At the same time the progressive movement is given, an upward component of motion is imparted to the material fed. In the case of the machine for coarse grading, the deck is mounted

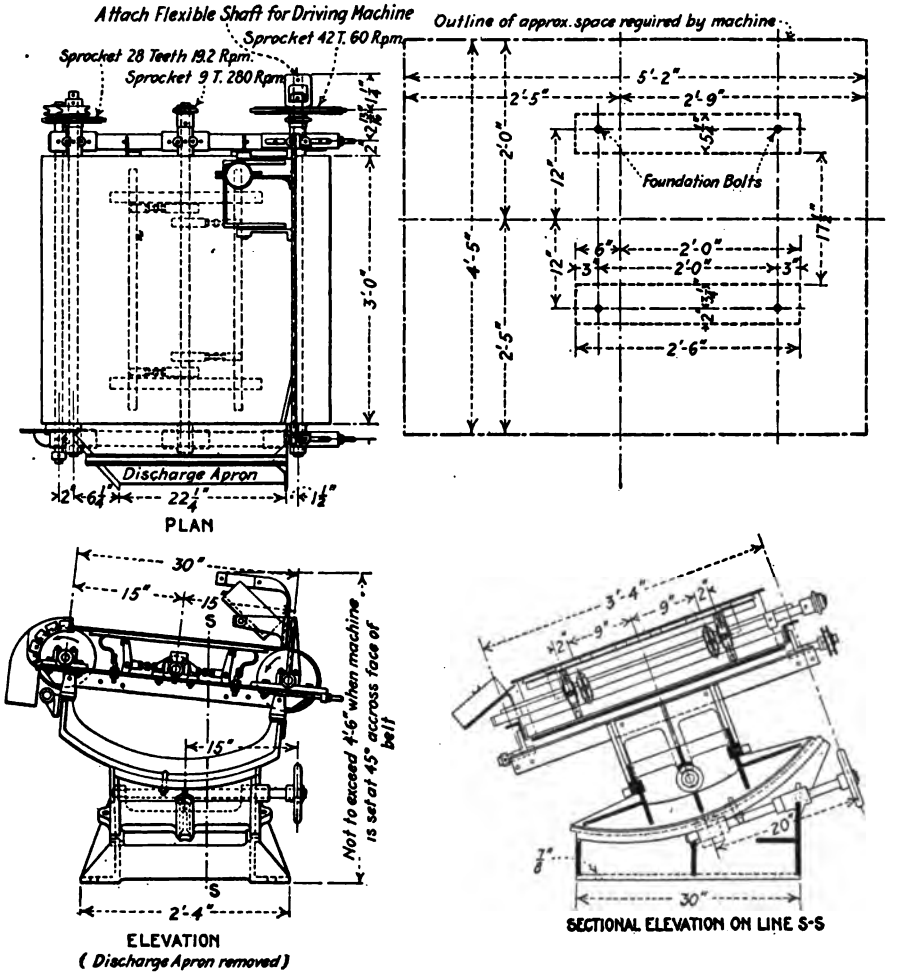

FIG. 164.

on rock legs placed at an angle with the vertical and the head motion at every stroke causes a sharp upward throw. In the machine for treating fine material, the upward component motion is given by toggles.

If an inclined roughened deck or surface be fed at an upper corner such as *A*, Fig. 165, and differential motion be applied to this deck, tending to move it back and forth in a general horizontal direction, then evidently the material, being under the action of gravity as well as the progressive force, will tend to pursue a diagonal path, and owing to the greater resistance offered by the

surface to the smaller grains in their downward fall, these will be carried further ahead on the deck than the coarse; consequently the grains will discharge from the edge *C* to *D*, with the coarsest at *D* and successively finer sizes toward *C*. An inclined roughened surface with proper means for progressing and agitating the material would give a grading machine which would yield commercial results, it being only necessary along the edge *C–D* of the deck to put in division planes at proper points to obtain any desired number of range of

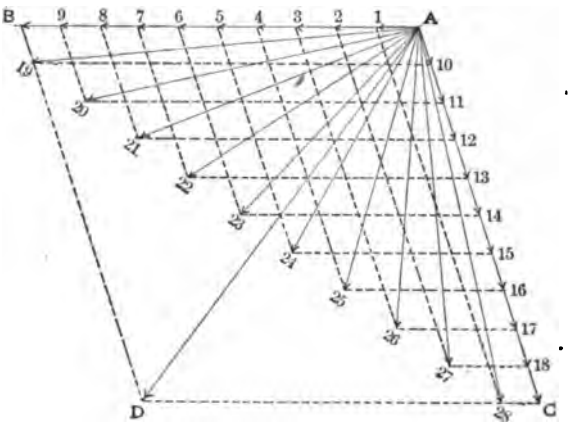

FIG. 165.

sizes. But to make the grading more perfect and to spread the discharge line, and thus reduce an overlap of sizes at the division planes, McKesson and Rice have introduced certain other elements of design. First the plain roughened surface is replaced by a corrugated one, the corrugations being generally parallel to the forward or progressive component. The first effect of such corrugation under agitation is to produce the interstitial action described later under concentrating tables, the fine material going to the bottom of the corrugations and proceeding forward, while the coarse remains on top of the fine in the corrugations and proceeds more nearly down the table than along it. In the fine grading machine the large grains in an individual corrugation at the moment of rolling may be considered to be resting on an inclined bed of fine material, and just as on the simple roughened plane, they roll down faster than do the fine; that is, they are more effected by the gravitational component than the fine. In the coarse grading machine the passage of the large pieces transversely from one corrugation to the other seems to depend largely on whether the vertical resultant line of gravity falls inside or outside the edge of the corrugation. If outside, the large piece will leave the corrugation for the one below. See Fig. 166. In the coarse grading machine the general direction of the individual corrugation is upward from the horizontal line of progression and at certain intervals, depending on the number of sizes desired, the general plane of the deck formed

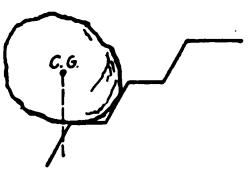

FIG. 166.

by the edges of the corrugations, is broken into a plurality of such planes which are inclined to one another. In Fig. 163 each set of corrugations gives a range of size, the one nearest the feed point yielding the coarsest material, and the others successively finer material. In addition the successive sets of corrugations diminish in depth and pitch. The effect of inclining the corrugations is to cause the coarser pieces to roll back, while the fines continue to advance. The effect of narrowing the corrugations is to crowd out the coarse material while the fines continue to advance. The same effect would be obtained if the corrugations were continuous and with regular inclination from end to end, but with gradually diminishing depth and pitch; but such a construction has been found mechanically impractical so far. It would have the advantage that the division into sizes would not be arbitrary and could be changed as well.

In adapting the type of machine just described to the careful preparation of fine sizes, the inventors were confronted with the dust difficulty, it being found that the progressive motion given by a head motion mechanism, such as is used on concentrating tables, would not cause the dust to advance in the corrugations. For fine sizes consequently, the inventors use the belt machine shown in Fig. 164, the material being advanced positively by the movement of the belt. The advantages secured by diminishing the depth and pitch of corrugation from *end to end* of the machine cannot be obtained with the belt machine, as it would of course be impossible to provide this effect with a moving endless belt.

The upward component of motion imparted to the grading surface is necessary in order to turn the grains into different axial positions. The machine tends to deliver grains of approximately equal average diameter or equal volume. Rolling friction is practically the whole underlying principle of action. The work of the machine so far as the eye can judge is, all things considered, as good as the best which can be done by screens. The use of screens to check or test the work of this machine would be an absurdity. The application of the sizer in mill work would be in the preparation of the numerous sizes necessary for magnetic and electrostatic separation and for dry concentration. The machine may possibly find application in the crushing plant where its use might reduce the rate of feed in closed circuits, or it may have a use in jig mills for preparing sizes for jigs. For these uses the upkeep may be less than with screens and closer sizing be practical.

	Coarse Grading Machine	Fine Grading Machine
Range of size.....	6″–0″	1/2″–0″
Horse power.....	3	1–1/2
No. of strokes.....	205	300 (vert.)
Belt travel.....	.....	40′ per min.

Capacity	Coal	Rock	
6″–1/2″	60 tons hour.	100 tons hour.	1/2″–10 tons hour.
3″–1/2″	45 tons hour.	75 tons hour.	1/4″– 7–1/2 tons hour.
1–1/2″–1/2″	30 tons hour.	60 tons hour.	1/8″– 4 tons hour.

CHAPTER X

SEPARATION OR CONCENTRATION PROPER. COARSE SEPARATION

So far in this work devices have been described which are preparatory or auxiliary to the actual work of separating. Nearly all the machines which have been described are used in the crushing plant. Grading in some form is necessary and to a measure to be laid down at a later point in this chapter. In the chapter on testing, it was shown at what point in the unlocking of an ore it would be profitable to begin separation.

Jigs.—For ore crushed to 1 in. (25.4 mm.) or finer, and down to sand sizes, there is one machine which can cover this whole field and in the upper range of sizes from 12-mesh opening up there is no other machine which attempts to compete with it. This machine is the wet jig existing in two forms, the Harz or fixed-sieve jigs or similar forms, and the movable-sieve jig, one form of which is exemplified by the Hancock.

A jig of any type is a device for giving pulsations to a mass of ore which is being treated by it. In the Harz jig the mass of ore rests upon a fixed screen in a box filled with water, and opposite to the screen is an up-and-down moving plunger which forces water up against the mass of ore on the screen on the down stroke of the plunger, and allows the mass to come back to the screen as the plunger moves up. The Harz jig is by far the most commonly used type. All we know about its action, except that of suction due to water drawn down through the mass of ore after it has returned to the screen, and tending to pull the finer grains through the interstices created by the larger by the continuance of the upward motion of the plunger and water, can be stated in a few words.

It has been found by experiment and theory that of two grains of the same specific gravity, the larger one will fall the fastest in a fluid like water, and this is due to the fact that the resistance with a small grain varies as the surface exposed, and with a large grain the resistance varies as the cross section of the grain, but since the downward resultant impelling force of grains of the same specific gravity is proportionate to the volume of the grain, the larger will fall faster than the smaller. In order to understand how friction affects the very small grains, let A and B be two very small cubical grains of edge l falling in a fluid; let them be considered to be bound together by a string of no sensible dimensions passing through the two grains with sufficient tightness to prevent the grains from separating. Now evidently under such circumstances, the grains fall as one grain of length $2(l)$, and the friction

will be proportional to $2(l)^2 + 4[4(l)^2] = 18(l)^2$. Now if the two grains be pulled apart while falling, the friction will be increased to an amount proportional to $2(l)^2$, since two additional faces are created and the double grain will fall slower. If the string be broken, we have two separate grains of smaller size falling slower than the single larger one, which was the point to be proved.

It has been found by theory and experiment that of two grains of the same size, but different specific gravity, the heavier will fall the faster. This must be evident from the principle of Archimedes, which states that a body loses a weight in a fluid equal to the weight of the fluid displaced, and as the lighter grain loses a greater amount of its downward impelling force, which is the weight of the particle, minus the weight of water displaced, the latter being equal in each case, its velocity will be less than that of the heavier grain.

If two grains, Fig. 167, *G* and *M* of the same volume, but different specific gravity, *M* being the heavier and *G* being worthless, be at equal distance above the screen of a jig as at points *AA* and they be given an upward pulsion by a fluid such as water, then they ought to arrive at the end of the pulsion at some such position as *BB*, but since both will fall to a certain extent and *M* falls faster than *G*, at the end of the upstroke *G* will be at some position *C*, and *M* at some position *D*. On the downward return following the upward movement, both grains will be aided by their downward impelling force, but since this gives to *M* the greater velocity, it will take the position *E* and *G*, *F*. By a number of cycles of operation just described *M* will ultimately reach the screen, while *G* will still be at some distance above it. If now while falling relatively to one another, the two grains are subjected to a sidewise current, such as is produced by the flowage of ore and water through a jig, then evidently *G* will be more affected laterally than *M*, and may be caused to flow entirely away and to waste, while *M* though not reaching the screen in a position vertically under its original one, but ahead of it, can be drawn through the holes of the screen, or removed by some other means and a separation is thus effected by one of the principles enunciated. The same effect evidently would be obtained if the fluid was flowing continuously upward with a velocity greater than the fall velocity of the *G* grain, but less than the fall velocity of the *M* grain. The *G* grain would rise and *M* fall, and if this action took place in a tube of finite length the *G* grain would overflow with the water at the top of the tube, and the *M* grain by suitable means could be recovered at the bottom. If instead of the grains being of the same size the *M* grain be made successively smaller, a point will be reached owing to the opposition of the fluid to the

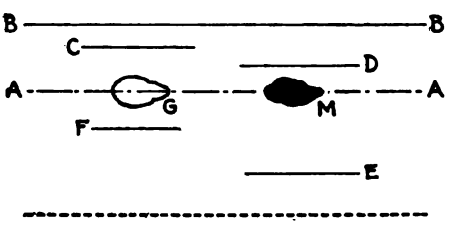

FIG. 167.

passage of this grain becoming increasingly greater as it becomes smaller, when it will have the same fall velocity as the G grain, and evidently when this point has been reached, no separation can take place under the two principles which have been enunciated. It will at once be seen why grading is necessary to the action of the Harz jig.

If x be the ratio $\frac{Dia.\ G}{Dia.\ M}$, when the velocities are equal, then evidently if the feed to a jig be the oversize of a screen with openings y, then the screen next above must not have openings exceeding xy. The opening xy will provide G grains, which are not more than x times larger than the M grain. The permissible practical variation in size of dissimilar grain in point of specific gravity, owing to conditions to be described later, is much narrower.

Equal Settling.—In order to find the ratios of concentration, or ratio of equal settling diameter for various commercial valuable minerals and worthless gangues of lighter specific gravity, the theory of settlement of solid bodies in fluids will be discussed from a theoretical point of view and then the modifications of the theory from practical consideration and experiment, will be given.

Let an irregular shaped grain G, Fig. 168, be immersed in a fluid at any depth h, let s' equal its specific gravity in terms of water; let s equal the specific gravity of the fluid in terms of water and w, the weight of 1 cu. in. of water; then sw is the weight of a unit of fluid; let D be the depth of water on a small square surface of the grain, sufficiently small so that it may be considered horizontal. Let dl be one side of this surface and hence the area be $(dl)^2$. $(dl)^2$ is also a similar element of surface on the under side of the grain and vertically below the first. Then the pressure on the upper elementary surface is $Dws\ (dl)^2$ and on the lower $(D + t)\ ws\ (dl)^2$, t being the vertical distance separating the elementary surfaces. The difference in pressure or the force tending to force the grain upward for the element of volume $(dl)^2 t$ is the difference of these two expressions, or $(D + t)\ ws\ (dl)^2 - Dws\ (dl)^2 = tws\ (dl)^2$. Now $t = \frac{v^p}{(dl)^2}$ where v^p is the volume of the little parallelopiped $(dl)^2 t$. Substituting this value the elementary upward force is wsv^p. For the whole grain the total upward force of buoyancy is $ws \int v^p + v^{p'} + v^{p''} + +$ or wsV, where V is the volume of the grain, and this is the same as saying the grain loses weight to an amount equal to the weight of fluid displaced. The latter way of stating the principle is convenient to remember, but may lead to confusion of thought unless the mode at which it is arrived is kept clearly in mind. For example, suppose there be a mass of grains of specific gravity 3 in water specific gravity 1. In this case the water is not the fluid in the sense

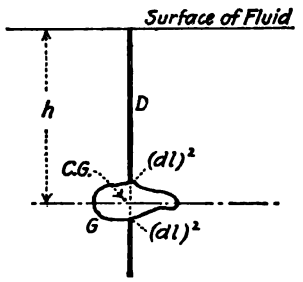

FIG. 168.

of buoyancy, but the combined solids and the water form the fluid and if the solids occupy 52.36 per cent. of the total volume, the specific gravity of the whole mass is 2.05, and the upward buoyant force is over twice as much as it would be if the liquid were considered as water; the significance of this will appear later. For the unbalanced force, or the force acting downward, for solids of greater specific gravity than s, we have $F = Vws' - Vws = \frac{Vws'a}{g}$; $s' - s = \frac{s'a}{g}$ or the acceleration a becomes $g\frac{(s' - s)}{s'}$, the force F, the resultant downward force, may be written $Vw(s' - s)$, the fundamental left-hand expression for determining the velocity of solids falling in fluids, and it will be noted at once that for two grains of the same size, but of different specific gravity, the force is independent of the size and depends only on specific gravity.

The formula for acceleration is susceptible to important analysis where grains of different specific gravity are of the same volume. If s becomes zero, $a = g$, the acceleration of gravity in a vacuo. Taking $s = 1$ and $s' = 5$, which would be a heavy commercial mineral, the acceleration becomes $4/5g$. If the value of s' is 3 for a light mineral, a becomes $2/3g$, or the velocity of the heavy grain tends to be $1\text{–}1/5$ times that of the light. If $s' = 2$, $s = 5$ and 3 respectively, the accelerations become $3/5g$ and $1/3g$ respectively, or the velocity of the heavy mineral tends to become $1\text{–}4/5$ that of the light. A reason will be understood for the observed experimental fact that of two equal sized grains of different specific gravity, when in a mass of the two minerals and water, the heavier will tend to increase its relative rate of fall over what it is in water alone.

In order to find the actual velocity of fall, the unbalanced force must be equated with the expression for resistance, for it has been found that the resistance increases with the velocity, hence under the acceleration produced by the effective portion of gravity, a velocity is quickly reached when the latter equals the resistance, and the ore grain then moves downward with uniform motion. Since the resistance is given by an expression involving V, which becomes the velocity of the uniform motion, on equating the expressions and transforming, the velocity of uniform downward motion can be obtained.

The knowledge of the resistance offered by a viscous fluid to the passage of a solid body through it, is far from being perfect. At high velocities, since there is a continual pushing aside of the fluid by a mass of cross section A, and with a velocity V it would be expected that the energy consumed would be all or a portion of the energy given out by a flowing stream of cross section A and velocity V. In addition to this there would be a force required to overcome the viscosity of the fluid, and since the surface of the grain and the velocity with which it is moving are the origin of this viscosity, it would be expected that it would be proportional to both these factors. Now at high velocities the retardation produced by viscosity is so small a portion of the

total impedence that it can be neglected, and only the pressure produced by the moving grain need be considered. This is found to vary with the shape of the grain; for example, a smooth shuttle-shaped grain, moving downward with its long axis parallel to the direction of motion, offers no resistance or practically no resistance to the fluid, for the anterior pressure created by the down movement is balanced by a minus posterior pressure, and there exists no tendency whatever to set the fluid outside of such a body in motion. If, however, a flat grain be falling in a fluid, and with its long axis at right angles to the direction of fall, then since its advance causes the fluid to flow in a multitude of radial lines across the anterior face of the grain, and this sets in motion the fluid beyond the edge of the grain, the anterior pressure is largely used up in producing fluid motion and very little is recovered in minus posterior pressure.

The force required to move a mass of liquid across section A must then be equated to the effective portion of gravity and will exactly equal it when uniform motion has been obtained, and when multiplied by a factor m, depending on the shape of the grain. Now $v = (2gh)^{\frac{1}{2}}$ but since the pressure $p = \frac{m\pi D^2wsh}{4}$, $h = \frac{v^2}{2g}$, substituting, $p = \frac{mv^2\pi D^2ws}{8g}$. This is a formula applying to a sphere of diameter D. For a sphere, experiment and theory places the value of m at 0.5. Now on equating to this value of p with 0.5 substituted for m, the left-hand expression as given on page 305 and transposing, v becomes $32.2\left[\frac{D(s'-s)}{s}\right]$, which gives an answer in inches per second, the diameter D of the grain being also in inches or fraction of an inch. $v = 2.67\left[\frac{D(s'-s)}{s}\right]^{\frac{1}{2}}$, when the velocity is desired in feet per second, the diameter remaining as before in inches. When $s = 1$, the formula becomes for water $v = 2.67[D(s'-1)]^{\frac{1}{2}}$. When the diameter of the grain and the velocity are expressed in meters $v = 5.11[D(s'-1)]^{\frac{1}{2}}$. All these expressions apply to the sphere.

The respective formulæ for cubes are for feet per second, $v = 24.5[L(s-1)]^{\frac{1}{2}}$, where L is the edge of the grain in inches or fraction of an inch, and $v = 3.91[L(s-1)]^{\frac{1}{2}}$, when velocity and diameter are both desired in feet. In the case of the cube m is 1.28. The dynamic pressure exerted by a plane being pushed through water is theoretically $2wA\frac{V^2}{2g}$, but experiments show that it is always less than two times $wA\frac{V^2}{2g}$ owing to the recovery by posterior pressure, but in experimental work, values as high as 1.75 have been obtained.

It will be seen that since the resistance of a grain varies as the square of the diameter, whereas the volume increases as the cube of the diameter, the resistance will be greater for small grains than large. Rittinger, who was the first to deduce a formula for fall of grains in water in the form $F[D(s'-1)]^{\frac{1}{2}}$ gives as a practical value for V in meters $2.44[D(\delta-1)]^{\frac{1}{2}}$, where D is also in

meters. There is a quite close accordance experimentally with values given by this formula down to the point where the velocity is so small that the mass of the fluid is not set in eddying motion. From this formula equal settling ratios of quartz with various minerals can be calculated. The majority of gangue minerals are quartz or substances of the same specific gravity as quartz; hence the ratio given will be correct for ordinary jigging problems and would correspond to the value x given on page 304, or what is called the free settling factor, and would be the controlling factor in jigging if separation were entirely due to free settling. Rittinger's ratios for free settling quartz are:

Sphalerite	1.85	Cassiterite	3.32
Pyrrhotite	2.14	Wolframite	3.64
Chalcocite	2.64	Galena	4.01
Arsenopyrite	2.82	Native copper	4.56

For galena and quartz Richards has found that the laws of resistance according to the square of the velocity, show marked discrepancies below diameters 0.13 mm. and 63 mm. per second velocity for galena and 0.20 mm. diameter and 28 mm. per second velocity quartz. These may be regarded as the critical sizes and velocities for these minerals. Below these sizes the resistance may be expected to vary more nearly directly as the velocity. These small grains are out of the range of jig work, but it will be convenient at this point to complete the theory of their fall rather than at a later place when machines for separating them are discussed.

The resistance of a small spherule is given by the expression $6\pi rkV$, where k is the coefficient of inner viscosity and r the radius of the spherule. The mathematical steps for obtaining this expression are too involved for presentation here. It will be found set forth at length in Kirchoff's Mathematical Physik, or in Lamb's Motion of Fluids. It is a formula derived from measuring the dissipation of energy in overcoming the viscosity of a fluid. The left-hand side of equation is as before the effective residuum of gravity which written in the absolute system is $\frac{4\pi}{3} r^3(s' - s)g$; therefore, $V = \frac{2}{9k} r^2(s' - s)g$. Experimental results for confirming the formulæ for large and small grains have been given by Richards. It will be noted that the principles enunciated in the early part of the chapter still hold, the heavier grain falling faster than the lighter and the larger grain faster than the smaller, but the relative velocities, where the resistance varies only as the velocity, will favor the larger grain.

It has been shown that where there is a mass of ore in a fluid such as water, the change in specific gravity due to the presence of the ore, favors the settlement and separation of heavy grains smaller than those shown by or indicated by Rittinger's ratio. It will be evident further that since the heavier grains are hindered by their neighbors in taking a direct path to the screen, their average velocity in reaching the screen is very much less than their free set-

tling velocity, and hence the relative settlements will be more nearly in direct proportion to specific gravity. This will be quite plain if velocity is considered to be reduced almost to zero, when the opposition to motion is also reduced almost to zero. The grains would then fall with velocities almost strictly according to specific gravity. As the velocity increases, size of grain becomes an increasing factor of retardation, but the ratio of equal settling could never become as low as under free settling conditions. A third factor in the increase of the ratio is the convergence of the interstitial opening from the top of the bed to the screen when the jig is in operation. At every down stroke of the plunger the grains rise and tend to spread out or separate themselves from one another to a degree which increases from the screen upward. In a rough sort of way the horizontal spreading apart of the grains may be considered to cause cones of open space vertex downward. Down these cones the smaller grains will drop farthest before being arrested by grains bounding the cones, and the heavier grains in this sort of action will crowd out the lighter ones of equal size and report at the screen, and such grain will be smaller than could obtain under free settling condition. Munro has shown by experiments with tubes of finite diameter, that as various sizes of grains are tested for fall in them, they diminish in falling velocity as they approach the diameter of the tube when the velocity becomes zero. This effect being due to the increase of friction between the grain and the liquid between it and the side of the tube, as the cross section of the liquid becomes smaller. Evidently in moving downward, in such interstitial passages, the smaller grain is less affected than the larger. Munro draws certain conclusions from his experiments, which do not seem to be warranted by actual jigging results.

Richards by his experimental work has combined all the increase in the free settling ratio due to the reasons given and arrives at what he denominates hindered settling factors of quartz and the following minerals.

HINDERED SETTLING FACTORS

Sphalerite	2.127	Cassiterite	4.698
Pyrrhotite	2.808	Wolframite	5.155
Chalcocite	3.115	Galena	5.842
Arsenopyrite	3.737	Copper	8.598

The relation of specific gravity to hindered settling ratio is shown in the accompanying curve, Fig. 169,[1] and will give the screen ratio for quartz and single pure minerals of different specific gravity. If two heavy minerals are to be separated one from the other, as well as quartz, then the hindered settling ratio of the lighter one must be divided into that of the heavier to find the screen ratio, if the hindered settling ratio of the gangue and the lighter of the two minerals is less than the first ratio. For example, the working screen ratio for a mixture of chalcocite, galena and quartz is not 5.842

[1] "Denver Engineering Works."

or 3.115 but 1.875, the ratio of the hindered settling factors of the two heavy minerals.

A jig with a fixed sieve was introduced about 1830, being first used in Cornwall by Captain Petherick. M. Berard about 1850 introduced the first continuous discharge for removing the material accumulating. The use of multi-compartment jigs with fixed sieve originated at Clausthal and on this account jigs with fixed sieves are termed Harz jigs. Where with fixed sieve jigging the concentrate or middling is drawn through the sieve the latter having holes with apertures larger than the largest pieces fed to it, a bed of coarse material interposing between the ore fed and the screen, the term English system has been applied. The other method of allowing the

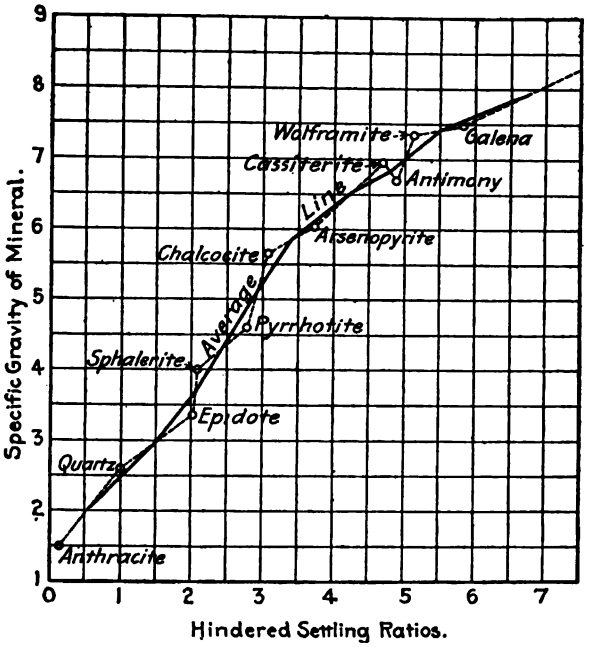

FIG. 169.

concentrate to accumulate on a screen with apertures smaller than the ore fed is termed the Continental system. In the Missouri field the English system is often employed to make rough separation, the middling resulting from this operation being further cleaned on what is termed a "finishing" jig. In the United States the Continental system is commonly used on the screen gradings and the English on the classified gradings.

Jig Construction.—Harz jigs are made with wooden, steel or iron frames. A cast-iron frame (Fig. 170) properly designed would make the best frame, but for heavy tonnages and large sizes it runs into great cost and weight. The effect of the pulsing action on a wooden jig is to loosen the boards and cause them to leak to an unsightly degree, and very often to an amount affecting the work of

the jig. For jigs making a large amount of *hutch* (the material which works through the screen into the body of the jig), and where this hutch is not allowed to flow continuously from the bottom of the jig, the ordinary cast-iron or steel jig sold by the makers is too shallow below the screens to have sufficient storage capacity. The cast-iron jigs are not very deep, and are hoppered, and since the hutch always lies with a perfectly horizontal top and readily flows out of the jig when the jig is opened, such hoppered jigs have their

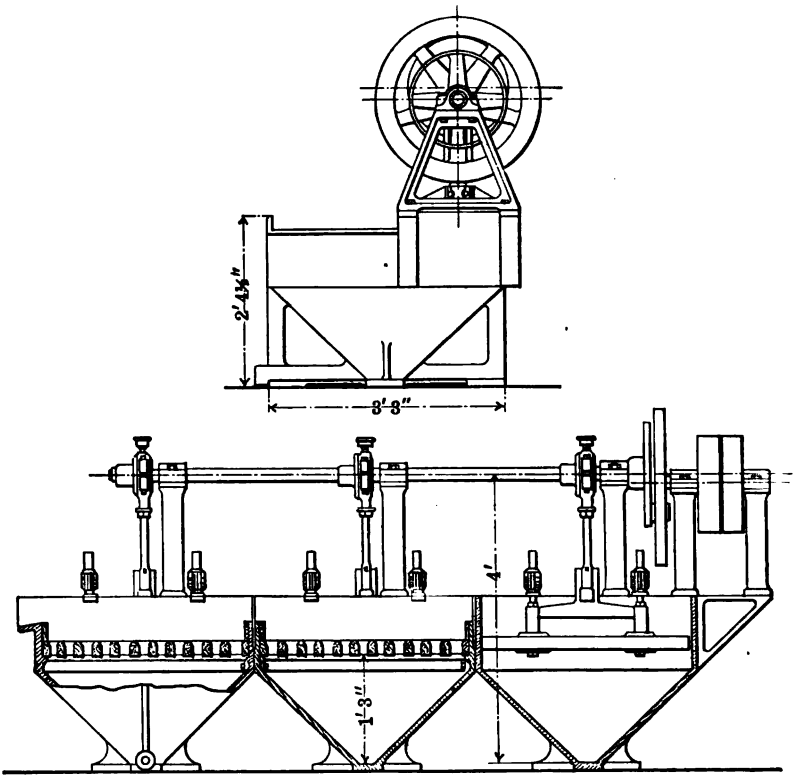

FIG. 170.

capacity cut down by the hoppering. For jigging coarse sizes of over 1/4-in. diameter, the hutches have to be run intermittently. The hoppered bottom has the only possible advantage of giving the water a tendency to reach the screen in parallel lines and at right angles to it. To attain this action in greatest perfection, round bottom jigs have been proposed and used. It is plain that without hoppering the flow of water will be greatest on the side of the screen nearest to the plunger, and that owing to the friction of the jig tank, the filaments of water leaving the plunger from the side farthest from the screen will reach the screen with very little motion, making the action dead on the side of the screen farthest from the plunger. This lack of action is more or less present even when the jig has double hoppering. I have failed

to note this effect to a practical amount. If there be no feed on the screens, and the jig is started up full of water, a sharp crested wave forms in the center of the screen which swings violently from side to side. This wave seems to be due to the meeting of the filaments having the longest path and those of the shortest path. In actual operation with a bed of ore on the jig, differences of effect of the pulsion can only be observed around the borders of the screen where the motion appears to be slightly more sluggish than in the central portions. That is for all practical purposes regardless of the shape of the underbody of the jig and up to the point where the water reaches the screen, the action of the plunger is merely a displacement. As the plunger goes down a certain amount of water rises through the screen and a like portion falls back on the return of the plunger. It is important, however, to have the partition between the screen and plunger of sufficient depth. The partition should be carried down to a depth of not less than one-half the width of the screen below the top of the screen.

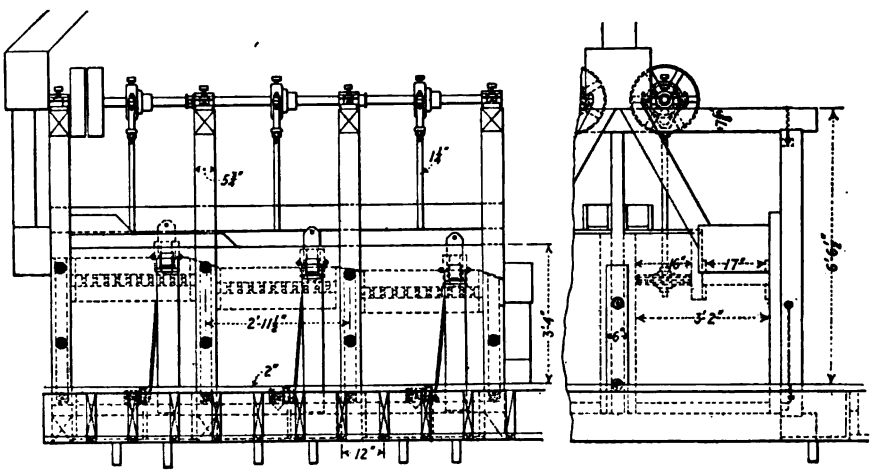

FIG. 171.

For large sizes, the wooden Harz jig more nearly fills the conditions for good operation than ones of iron and steel. The metal jigs are always bought complete; hence a description of the proper arrangements of this type will be omitted. A description of Harz wooden jig practice will be given, not necessarily complete, since the details advocated are the result of my own experience, and I fully recognize that many similar details or other details not mentioned, worked out by others, and with which I am not familiar, may be equally as good or better than the ones prescribed. Referring to Fig. 171, showing an actual construction, it will be better to have the length and breadth of the plungers equal to the net area of the screen, although in the drawing the width of the plunger is 1 in. less than the net area of the screen. The screen is secured to the screen frame, which rests on cleats below, and after the screen and frame are in place it is secured by cleating all around.

The cleats plus the cleat liners are of the same thickness as the stock used in the sides and end of the screen frame, and the net dimensions of the screen are those measured inside the cleat liners. For the size jig shown the bent timbers are too light. They are dressed 6 × 6 in.; they should be 7 × 8 in., and the cap timber and sill timber 7 × 8 in. also. Even heavier sticks can be used to advantage on large bull jigs, and will be found to give added life to the jig. If jigs are made smaller than the size shown in Fig. 171, smaller posts and caps may be used, but nothing smaller than 5 × 5 in. should be employed or lumber of less than 2–3/4-in. thickness. The method of securing the caps to the posts is poor. The posts should be grooved on the inside for the whole length at a point to escape the cross rodding, and the rod should pass through the caps and sills. To save floor space it is convenient to make the jig in pairs, but the center post should be 6 × 6 in. and not the light one shown in the drawing. The tank lumber is of the right weight. The cross partition boards are mortised into the longitudinal boards. The longitudinal partition dividing the plunger and screen portions is mortised into the cross partition boards. Only the best straight grained and straight sawed, tongue and grooved lumber, should be used, Oregon pine being the best. Three sets of cross rods should be used at each bent. It is customary to put these through in the grooving of the lumber, the rod taking the place of the tongue, but the boards should be bored from end to end at another point, for it is impossible to prevent unsightly leakage around the rods when they rest between the boards. The boring will require great patience and skill and exact measuring, but the results attained will be worth all the care.

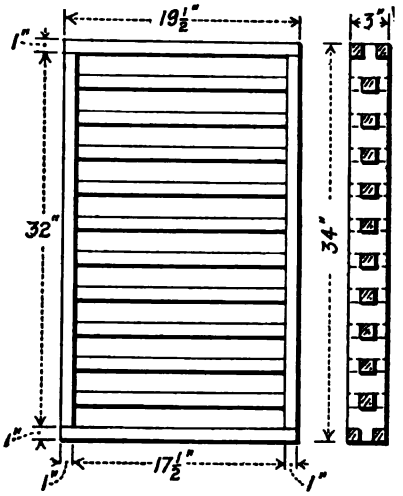

FIG. 172.

In order that the jigman may have a convenient height to stand and perform the necessary operations about the screen of the jig, the whole jig may rest on the main mill timbers, and the floor be built around the bottom of the jig in the manner shown in the figures. When the jig is completed the outside should be given two coats of white lead in linseed oil, colored gray with a pigment. Lamp black is commonly used as a pigment, but this gives a bluish gray which does not match the color of slimy water; a yellow-gray pigment should be selected.

Screen Frames.—A well-made screen frame is shown in Fig. 172. Brass cloth is most commonly used for jig screens, and is secured to the frame by

single or double pointed nails. The finer the cloth, the closer must be the spacing of the cross slats. Because of the blank spaces created by the slats, I prefer for coarse screens perforated sheet steel; those with square openings being better than those with round openings. Although these square-opening screens have a smaller percentage of opening than cloth, they are stiffer and do not require the supporting slats to be placed so closely together, and some of the open space lost is regained from this cause. The plate is less damaged by "scratching," the operation of rubbing the screen with a chisel-edged bar to unblind it. In the Missouri field cast-iron jig grids with long slot openings are used and from the point of durability this form of screen

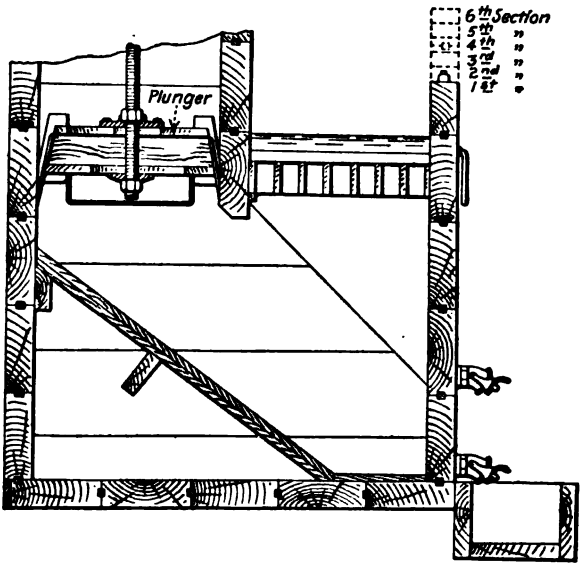

FIG. 173.

has much to commend it. Various devices have been proposed for reducing the width of the blank spaces caused by the screen frame, such as making the frames out of steel and the cross bars being narrow steel strips. The modes of securing the screens to the metal bars have not proved entirely satisfactory.

Plungers.—Plungers are made with strips of wood in alternate layers, the grain of the wood crossing one another in the different layers. Pieces 3/4 in. thick and four layers deep make a good strong plunger. The plunger is secured to the plunger rod by large, round cast-iron washers and nuts. Plunger compartments are wood and steel lined, a detail not shown in the figures. The plungers should always be set so that the top surface when at the highest position of the plunger is lower than the screen. In some continental jigs the eccentric is provided with a slide and pin, and the rod below the pin has a true up and down motion. This practice, I believe, is becoming obsolete on

the Continent. It has never been used on American Harz jigs, a straight rod being provided between the plunger and eccentric, and the former having a rocking motion in its up and down pulsions. This requires the plunger to have a loose fit, but the clearance should be made small, so as to make the action of the plunger as positive as possible. The proper clearance can best be determined by experiment, starting with 1/4 in. clearing all around. The suction produced as the plunger rises, pulling the water through the screen, lowers the capacity of screen-fed jigs materially and produces a large amount of sandy hutch, if these jigs make their own bed, which is too rich to throw away, and much of which could be eliminated in tailings if the ore was of such a character as to permit of making tailings. The American Concentrator Company makes a plunger (Fig. 173) with a flap all around, the flap being secured to a plunger with tapering ends and sides. On the downstroke the plunger is forced against the sides and ends of the plunger compartment and makes a seal. On the upstroke the flaps fall away, and the suction of the plunger is practically destroyed. Devices of this kind are not popular with millmen, they being thought to add a complication not compensated by better results. The plunger rod of the American Concentrator Company's jig runs in fixed guides, and the plunger has pure vertical movements. With the ordinary plunger arrangements the sealing on the downstroke would be imperfect if this device were used.

The *dead box* is the distributing box at the feed end of the jig. The front of the dead box should be mounted with a horizontal front strip, or dam, so as to allow a protective pocket of ore to accumulate in the dead box and to secure evenness of distribution of feed across the whole width of the jig. Dead boxes are sometimes placed with the discharge edge flush with the bed of ore in the jig, but this is poor practice, for the bed in the first compartment should be loosened up as much as possible by the impact of the entering stream of ore. The discharge edge of the dead box should be 2 or 3 in. above the surface of the ore bed. To help distribute the ore, a baffle can be inserted in the dead box parallel to the dam, a little distance behind it, but in front of the point where the stream of ore and water from the spout impinges.

Plain boxes with grease cups should be used for jig bearings. An eccentric of good pattern is shown in Fig. 171. These eccentrics are provided with a gauge for indicating the stroke obtained from the different settings. After the eccentric becomes worn, the readings of the gauge are unreliable. For obtaining the exact stroke of the jig, I have found the simple devices shown in Figs. 174 and 175 convenient. They can be made by the blacksmith and carpenter at the mill. The metal piece will be readily understood from the figure. The portion with the thumb screw is slipped on the plunger rod while the jig is running and tightened at a little distance above the cover of a plunger compartment. The hinged pencil end is at right angles to the axis of the plunger rod. The ends of a strip of paper are slipped in the slots *A* and *B* of the wooden target, Fig. 175, and in registering the

stroke the target is pushed up to the vibrating pencil point, which will make a band of lines on the paper to be measured with a rule for length of stroke.

Hutch discharges are shown in Figs. 171 and 176. The gates of Fig. 171 leak badly under wear. The gate of Fig. 176 is excellent. Where the hutch discharges constantly a little experimentation will have to be undertaken to find for each particular size jig the hole large enough to dis-

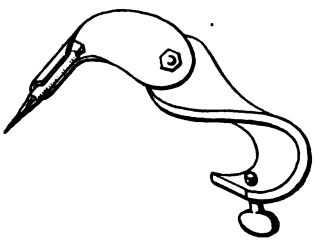

FIG. 174.

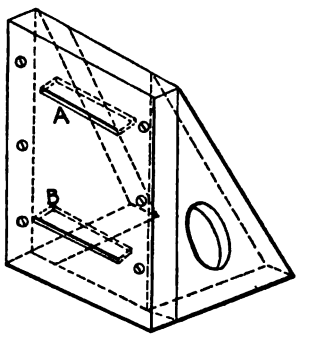

FIG. 175.

charge without choking, but not too large to cause waste of water. For jigs discharging hutch intermittently, a single large hole is all that is necessary.

In testing Harz jigs in the mill for the rate at which different products are being made and for their assay value, there will be no trouble obtaining the top discharge products. Those from the concentrate and middling discharges can be obtained by slipping in bent pieces of tin, forming a short spout and having suitable receptacles for the samples resting on the floor below. For catching the material discharging at the end of the jig, the board forming the top and front of the spout can be pierced in the center with a 2- or 3-in. hole, and a wooden flap exactly closing the spout can be hinged below the hole. On the snap of the stop watch, the flap can be closed down, and all the over-flow of the jig will then run through the hole in the spouting, and into a receptacle. When the flap is raised it will not interfere with the discharge of the overflow. If the jig is so set that the hutch discharge is well above the floor and the hutches discharge continuously, no difficulty will be encountered in sampling the hutch products. If the hutch discharge boxes are sealed or closed in by the floor, it will be more convenient to catch the samples below. If the hutch discharges intermittently, the entire hutch material must be drained as much as will run at regular intervals. These intervals need not be

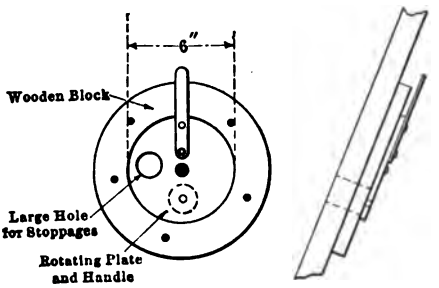

FIG. 176.

so close as the intervals for taking the other products, and they will be governed by the rate at which the various compartments are making hutch and the conveniently handled size of the receptacle for this material.

Capacity.—The equipment of jigs for a mill will, for the sake of uniformity, usually comprise machines which are identical in all dimensions except length, but the length is a matter of number of compartments. The fine jigs have more compartments than the coarse, the latter having 2 to 4 compartments, while the fine ones have from 3 to 6. One reason for the greater number of compartments for treating finely divided ore lies in the fact that there is more mineral of commercial value free in the fine sizes than in the coarse. Since the degree of unlocking is greater an extra number of compartments are needed to catch the concentrate. The size of American jig compartments range from 12 × 24 in. to 24 × 48 in., but the usual size is about 18 × 36 in. The average ratio of length to width is about 1.75 to 1. In giving an outline of jig separation, it was stated that without the forward current produced by the general flow of ore and water through the jig, there would be no continuous flowage of heavy material in one direction and light and worthless in another, or no continuous separation. If, however, the heavy portion is very nearly of the same specific gravity as the light, as it would be in the last compartment of a jig, making concentrate, middling and tailing, the concentrate having been removed in the first compartments, and middling on the later ones, then the forward current in the last compartments would tend to sweep both the heavy and the light grains to waste. There should be sufficient cubical contents to the compartment to check the force of the forward current, providing that the lightest grain of value will settle, or what amounts to the same thing, the rate of feed to be such as to provide this condition for any jig of given size.

In many mills treating sulphide copper ores, no middling in the sense just mentioned is made. The jig takes out as much concentrate as possible, and all material overflowing the jig, which is called tailing but is really middling, is reground and retreated on jigs or concentrating machinery suitable for sand and slime grades. In this case the cubical dimensions of the last compartment is still the governing factor for determining the size of compartments of a jig, but it is not nearly as important as it is in the first case, owing to the wider separation of the specific gravity of the material which is finished and the material retreated. The different compartments should increase in size from the feed to the overflow end, but they never do, because it would add a complication to the design. The effect is not harmful from the point of separation. The compartments near the feed end are only unnecessarily large for the work they have to do. It is becoming recognized, however, that over large concentrate compartments are harmful where jigging soft, heavy materials. The effect is particularly noticeable with the large sizes of galena ores, where the proportion of concentrate is small, and consequently in a large compartment the lower layers of concentrate

forming the portion of the bed moving toward the discharges has a very slow movement. It is quite common to see the pieces of discharging galena rounded like marbles. If these pieces were originally cubical, then the loss in fine galena must be at least 47.6 per cent., since this is the percentage difference in volume between a sphere and the smallest enclosing cube. It is possible to save some of the fine galena, but it is an expensive operation to do it. To catch the fine galena which goes to waste with the tailing, the stream of the latter must be lead through dewatering devices, such as a tank with an inclined endless belt with drag flights, or a tank with an inclined elevator, the buckets being of a shallow lip pattern and pierced so that they will drain. If the space for such an apparatus is limited, settling capacity can be increased by having pointed boxes near the tank for settling the high-grade slime, for with limited settling capacity in the dewatering tank some sand will be carried over and this must be eliminated before settling the high-grade slime. The separated slimy water should not be used for washing on the concentrating machines if the solid matter in it is of a shipping grade. Jig tailing water apparently crystal clear, often contains sufficiently finely divided solids, which will pay to settle and ship.

A second factor in the capacity of jigs is size of ore fed. More of the coarse material can be run over jigs of the same size than fine. Fine jigs are frequently fed with gradings from classifiers, the concentrate being made by being drawn down through an artificial bed of heavy material placed in the compartment. In the middling compartments discharge is also through a bed and screen, the former usually being made of the ore itself. This mode of discharging products is slow and requires a large compartment, or a number of them to obtain a moderate capacity. It must also be evident that the more finely divided the ore, the faster is its forward flowage, and the slower the rate of settlement.

As a purely empirical expression, I would recommend in lack of other data that the capacity of a jig in tons per 24 hours be taken as per square inch of a single compartment. This is given by the expression $\frac{(d)^{1/2}}{100}$, d being the average diameter of ore fed in millimeters. To find the whole capacity of a jig, multiply the value obtained from the expression by the area of a single compartment. For example, what is the capacity of a jig receiving feed which is the undersize of a 20-mm. trommel and the oversize of a 12, and which has 18 × 32-in. compartments. By the rule, the capacity per square inch is 0.04 tons per square inch per 24 hours, or the capacity of the jig 23.0 tons per 24 hours.

In speaking of settling capacity of compartments, only cubical capacity has been mentioned as the determining condition, but since the upper layers of the bed have a much greater forward movement than those of the lower, it will be nearer the truth to speak of the capacity for settlement in terms of the area rather than the cubical contents. After the grading arrangements

are laid out on the basis determined by test, and the rate of flow determined, the size and number of the jigs can be determined by the above rule, if the test work has not given this additional knowledge. Carefully conducted test work will also fix the number of compartments for the different jigs. The ratio of length to width of 1.75 : 1 is good practice. Wide compartments are somewhat more preferable than long ones, but it is difficult to get an even distribution of water from the plungers over the wide ones.

Removal of Concentrate and Middling.—Coarse jigs, those receiving screen ore from 25 mm. to 3 mm., make their own bed, the screen used on the jig being of little smaller effective aperture than that of the lower trommel, limiting the size of the grading for the particular jig. Since there is much fine material in these gradings, owing to the imperfection of the work of the trommel, some of it will work through the screen and make a hutch product, which must be tapped one or more times during a shift and sent back in the main flowage stream. The concentrate and middling are removed by

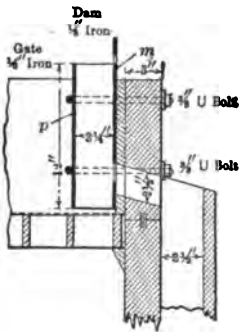

FIG. 177.

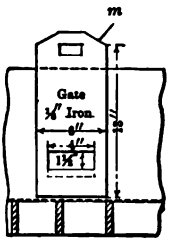

FIG. 178.

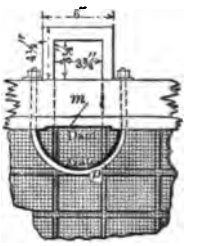

FIG. 179.

flowage to discharges, the common type being shown in Figs. 177, 178 and 179. These are commonly placed on the side of the compartment near the lower end, but a better place would be in the center of the end of the compartment. The pen p is set down in the bed with a clearance just sufficient to allow the largest grains to pass under it. By raising and lowering the dam m with its slotted opening, the grade of the concentrate can be controlled. When the jig is first started, the slot is closed with a piece of burlap to hasten the accumulation of the lower layers of the better material on the screen. When the richer grains have driven out the poorer ones in the bottom layers, the dam can be opened, when the pen will be found full of concentrate or middling, of the grade of the lower layers.

If s is the specific gravity of the material in the pen, and d its depth, then $sd = s'd'$, where s' is the average specific gravity of the column in the bed outside the pen and d' its depth; d is always less than d', and s always greater than s'. If after releasing the dam there is no change in the grade of concentrate entering the jig, then concentrate or middling of a uniform grade will

continue to discharge, and the dam will not need any adjustment. If, however, the grade increases, s becomes greater and there is richer flowage. Now if it is desired to maintain the concentrate at the grade which obtained when the dam was first opened, the latter must be lowered. This will increase the difference in head between the pen and the bed, and the flowage will increase very materially, and an extra increment of lower grade material will be added to the flow of concentrate or middling to take care of the flowage caused by increased velocity due to increased head, and this would continue until conditions were again balanced, or until sd, where d is less than before $= s'd'$, where s' is less than before. If a higher grade of concentrate is desired at any time, the dam is raised, concentrate stops flowing and s' must increase to a point where the bed column will be heavy enough to raise the pen column and cause it to overflow; and after the pen is cleared of the grains already in it the richer material will flow until conditions are again changed.

Suppose a jig to have a depth of bed of 4 in., and the material fed to have a range of specific gravity from 2.7 to 7.7. If the jig be discharging 7.7 concentrate, then the height of the concentrate column is 1 in. + 2.02 in. = 3.02 in. as a minimum, neglecting the work to be done in moving the concentrate to the discharge. The bottom layer of 1 in. may be regarded as common to both the pen and bed columns. The average specific gravity of the bed column is 5.2. Since the grains will grade from 2.7 specific gravity at top, to 7.7 at the top of the common bottom layer, and $d's' = 15.6 = ds$, d must be equal to 2.02 in., and the depth of the concentrate column is as above, 3.02 in. The depth of the bed in the jig is 4 in. The differences in these results caused by the presence of water has been neglected. Suppose it be desired to draw off a middling product of specific gravity 3 and owing to the removal of concentrate in the neighborhood of 7.7, the material entering the middling compartment ranges in specific gravity from 2.7 to 4. Then, as before, the lower layer of 1 in. is of average specific gravity 3, and ranges from 3 at the top of the layer to 2.7, giving a specific gravity for the bed column of 2.85 making a total height for the pen column 3.85 in., which is within 0.15 of the depth outside, since $d's'$ equals 8.55, or d equals 2.85 in., or the depth in the pen column 3.85 in.

If there is a large body of middling to be moved toward the discharges, the impelling head will be quite feeble and this head will decrease as the specific gravity of the middling decreases, and will not be sufficient to provide for both velocity and friction head necessary to discharge the middling. Moving the dam down in an attempt to increase the head, will have the sole effect of reducing the grade of middling and cause much tailing to discharge with the middling. Suppose the middlings be prevented in discharging until it has attained a specific gravity of 4; then the actual depth of the pen column is reduced to 3.51 in., the bed remaining as before, 4 in. depth.

The difference in head between the two columns has nothing to do with the actual moving of the middlings toward the discharge, but a great differ-

ence in head indicates better conditions for moving a product toward a discharge. The source of the head for overcoming friction in moving any product toward a discharge and providing the velocity head in addition is the velocity of the stream at any section in such movement out of the jig. Moving a large body of middling requires high velocities from section to section. The kinetic energy of the stream of middling will vary as the square of the velocity, but as the resistance at high velocities will also increase as the square of the velocity, increasing velocity arising from greater bulk of middling will not be of any advantage. On the other hand, the greater the specific gravity of the stream the more energy will be available for overcoming frictional resistances and the more velocity will be available for creating a velocity head. If middlings are removed in successive compartments the bulk of material removed in the last compartment will be very much smaller than the bulk resulting in attempting to remove the middling in a single compartment. The specific gravity of the middling removed in the last compartment will be somewhat less, but the loss in energy from this cause is less than the gain in reduced frictional resistance due to the decrease in velocity. With slow creeping velocities the resistance may be expected to vary more as the velocity directly and not as the square of the velocity.

In a single compartment there must not be too wide a range of specific gravity. Most ores are not pure mixtures of single heavy minerals and a worthless mineral or gangue. Even where there is only a one-mineral separation to be performed, the material fed to the jig contains grains with percentages of metallic value ranging from that in the purest heavy material to gangue pieces containing nothing whatever. The rich pieces are easy to recover, but the lightly mineralized ones are very difficult to remove and require that the ore be well and closely sized before it enters a Harz jig, and that it be progressively eliminated in different grades of middling of a multi-compartment jig. The entire elimination of all the middling grains will be impossible, but it can often be done with greater perfection than is found in the mills. Information for accomplishing perfect elimination may be obtained from proper test work before designing the mill. This test work will show how many compartments are needed for each grade fed to the jigs, and whether it will be possible to make one middling, or several, and at the same time clean tailing.

The difficulty of eliminating the last middling grain lies not only in the lack of energy of the middling stream, but also in the fact that it is under the influence of the flow of ore and water in the jig, the water causing much more current than the ore. The water tends to increase toward the discharge end of the jig. The tendency of the middling grain is to flow forward rather than downward. Middling discharges ought therefore to be placed in the end of the compartments, and there seems no reason why the discharges should not occupy the whole width of the jig at the end of the compartments. There are some patented discharges of this kind on the market.

In 1910 I wrote:

"The greater part of the work of experimenters in jigging has been done with pure or very nearly pure mixtures of minerals. Jarvis reports in his paper on jigging that 'The results indicate that in order to separate sphalerite and quartz a jig of at least three compartments should be used since small differences in the specific gravity of these minerals require a longer time to effect the separation. In the case of a heavy mineral, such as galena, one or two compartments will effect a perfect separation.' I agree to this statement provided the test ore comes from narrow seams of pure ore in a pure gangue. Unfortunately ore seldom occurs this way.

"At Wardner the ore body is typically an aggregate of fissures, the centers of which are nearly pure galena. From the centers out on either side the percentage of galena gradually lessens until finally an unmineralized quartzite is reached."

I will add parenthetically that the quartzite has been badly shattered in all directions, and heavily replaced by siderite, and this in turn by the sulphides; the ore usually fades out in the iron carbonate, as this replacement in turn fades out in the quartzite.

"The centers of the seams yield ore which could be sorted out underground. Next to these zones is ore which could be sorted out in a surface sorting plant, or yield coarse concentrates. Then follows a jig middling zone and finally a tailing zone. The error of too few compartments is best seen in the two-compartment bull jigs which make middling as well as tailing. In Fig. 180 I have attempted to represent the distribution of the lead in 100 lb. of bull jig feed which assays 8.53 per cent. lead. I have made the curve of the diagram in broken lines for simplicity in calculation. For each (even) per cent. the abscissæ shows the number of pounds of material. For example, there is 0.25 lb. of 40 per cent., etc. The sum of these abscissæ equals 100 . . . The area of any particular part of the diagram will furnish the number of pounds of material in that part. For example, there is 5 lb. of material from 40 to 80 per cent. Suppose it is desired on the bull jig to make a 50 per cent. concentrate, then out of the 100 lb. of feed it will be necessary to remove all the ore from 80 to 36 per cent. assay grades inclusive. This will amount to 6.375 lb. of concentrate, having an average specific gravity of 5.7, the whole feed sample having a specific gravity of 3.46 high because of the content of galena and spathic iron . . . Passing into the second compartment there will be 93.625 lb. of ore containing 5.7 per cent. lead, and having an average specific gravity of 3.30. The specific gravity of the heaviest grain entering this compartment will be 4.9. By making the concentrate of little lower grade, it would be possible to make the richest grains passing into the second compartment have a specific gravity of 4.2, which according to Dana is the specific gravity of the purest sphalerite. I feel inclined at this point to make the statement that if three compartments are necessary for sphalerite, four are necessary for galena."

Owing to the fact that the Wardner camp is so far from the smelters, the freighting costs are heavy, and it is necessary for the shipping products to contain over 40 per cent. lead. In camps near the smelters the lead content in concentrates may be as low as 15 per cent. Where it is possible to ship so low a grade of concentrate the work of removing middling in the second

compartment of a two-compartment jig would be very much less than under Coeur d'Alene conditions, and it is quite possible that two compartments would be ample, but as is evident, the reason for this is quite different from that given by Jarvis.

"At the bottom of the diagram I have cross-hatched an area which shows graphically the pieces of 2 per cent. and lower grade. The average grade in this block is 0.78 per cent. lead, and the weight . . . 50.092 lb. I assume that out of the

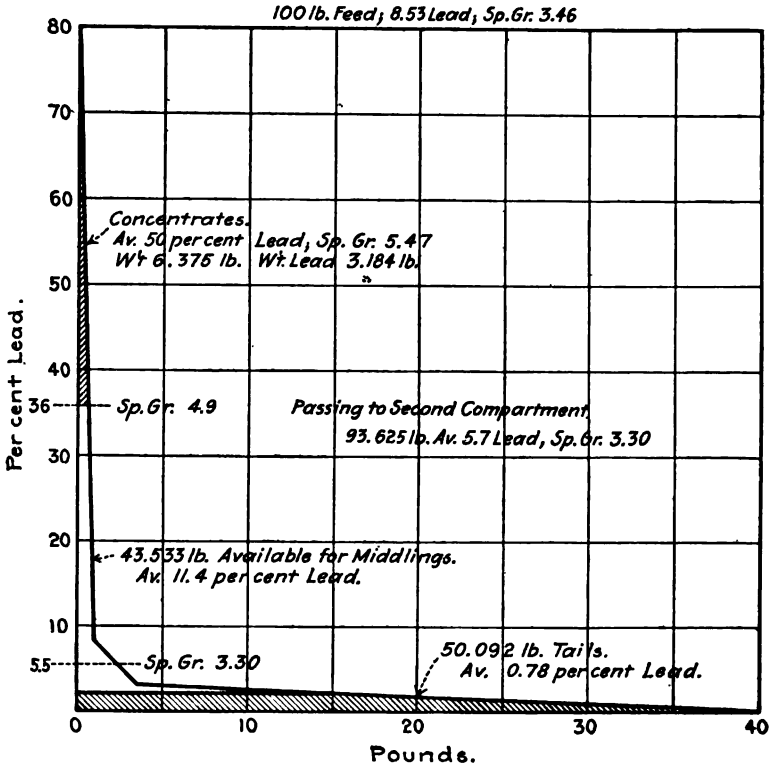

FIG. 180.

original 100 lb. of feed this weight and grade of material is the tailings, or rather that it is desired to work to this limit."

Here is an actual case as discussed under the relations of the pen and bed columns. The material entering the second compartment has an average specific gravity 3.3, the heaviest 4.9. The work called for is to draw off at one operation all the grains from specific gravity 4.9 down to specific gravity 3.1. It cannot be done and I believe the limit of what can be done is to remove all the grains from 4.9 to 3.3, or from 36 to 5.5 per cent. lead, the balance being removed in a third compartment. This would be the same as saying that the limit of removal is the grain which has a specific gravity equal to the

average specific gravity of material entering a compartment. A concept of the meaning of this statement can be gotten by considering the mass of grains in the second compartment a liquid of specific gravity 3.3; then evidently no grain of specific gravity less than 3.3 will settle through the mass.

Close Sizing.—In discussing the screen and jig ratio in the early part of the chapter, hindered settling ratios were given for pure galena and quartz, but it must be plain that in difficult jigging problems, such as the one described, these experimental values obtained from pure minerals are not of much moment, since the real jigging problem is the removal of all but the lightest middling grain and of a specific gravity but little greater than the tailing. This would call for a screen line with successive screens of apertures but little smaller than the screen above. The trommel with largest opening used in the Coeur d'Alene region is about 20 mm. The next size called for by the hindered settling ratio for galena is 3.4 mm. But the usual succession of trommels in that region is 20, 12, 9, 5 and 3–1/2 mm.

In most mills the object to be obtained by close sizing is almost entirely defeated by poor screen work, and of late years the tendency has been to use fewer screens and larger ratios. The main reason for poor sizing work is overloading due largely to the screen and jig being in a closed circuit.

Where large amounts of middling or concentrate are to be removed, it might pay to have the screens of sufficiently large aperture to permit these products to discharge through the screen. If the material were very coarse, mechanical means would be necessary for removing the hutch, unless there were a superabundance of water. I suggest this mode of jigging for working a low-grade dump. Here the operation of jigging would be the removal of a low-grade concentrate just sufficiently high to pay to grind and concentrate to a finished product on sand and slime separating machinery. Since a large tonnage and small cost equipment is a *sine qua non* of a dump mill, it would require jigs of a large capacity, and the removal of large volumes of middling for regrind through the screen could be more easily effected than through top discharges. The difficulty of discharging through the screen would lie in blinding, and the nice regulation of inflow of material to the variable rate at which the hutch would pass through the screen apertures.

Jigs below the screen sizes have artificial beds usually prepared from the concentrates for screen-fed jigs. The size, kind and depth of bed will have to be determined in the individual case. With deep beds only the richest material gets through the screen. The greater the specific gravity of the bed, the richer and finer the material which will work through it. The coarser the bed, the more freely material will work down through it, and hence capacity is obtained at the sacrifice of grade. The bed ought to consist of material of about the specific gravity of the product to be removed. Iron and lead shot have been used for bedding and have the advantage of permanence. The first material must be removed from the screens if the mill is

shut down for any considerable period, for otherwise it will rust into a solid, immovable mass.

Material is most frequently graded for the fine sizes by classifiers into which the underflow from the lowest screen passes. In the classifier the underflow is subject in the successive compartments to rising currents of water which diminish in velocity from the first compartment to the last. The classifier usually discharges three or four sets of gradings from as many compartments, and an overflow which is treated on sand and slime machinery. The classifier is usually made double, the stream from the last trommel being split before entering the classifier, and each of the corresponding pair of gradings have a jig to treat them. The theory of fall of bodies in fluids has already been discussed. If light and heavy grains of ore are subjected to an upward current of water, there will be a grain of a certain size of each of the grains of different specific gravity which will have a fall velocity equal to that of the rising current, and all smaller than satisfies this balance will rise and all greater will fall. The first grading from the classifier will resemble a sized product, but the heavy pieces will contain some which average smaller than the small gangue particles. In the other compartments the gradations in size will appear sharper. There will be a range of gangue grains, with comparatively large ones at top, then will appear the mineral of next higher specific gravity with a top grain smaller than the top gangue grain, but extending down to terminal grains which average smaller than the gangue, and like gradations with successively smaller top grains and bottom grains can be noted as the specific gravity increases. As the successive currents diminish, the top and bottom grains of each kind become successively smaller. It would be expected that the lower terminal sizes would be quite marked with any given upward current, but such is not the case, owing to the friction of the rising water with the sides of the compartment creating down currents from eddies and from the down-going and up-coming grains creating similar eddies. Free settling classifiers are used in jig work, and in this type the cross section of the compartment is much larger than the cross section of the stream of ore removed in the compartment if it were closely crowded together. This provides nearly free fall for the individual grain.[1]

The difference between the free settling and hindered settling ratio, and the factor of suction by which, using a bed on the jig, with sufficient interstitial space so that the small heavy grains are drawn through while the large gangue grains go on to waste, provide the sole factors for separation on jigs fed with classified gradings. On the jigs receiving feed from the first compartment of a classifier, and possibly the second, there will usually be top discharges to take off concentrate too large to work through the bed. The jigs for treating the finer gradings have no top discharges, everything being made through the bed. The middlings are removed in the same way as the

[1] Absolutely free fall does not exist in any Classifier.

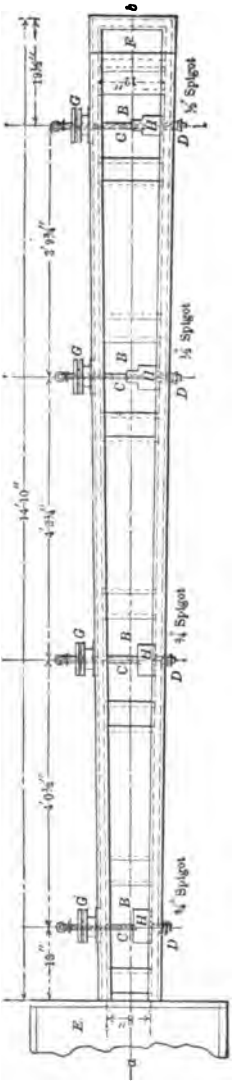

FIG. 181.—Plan of Richards-Coggin hydraulic classifier.

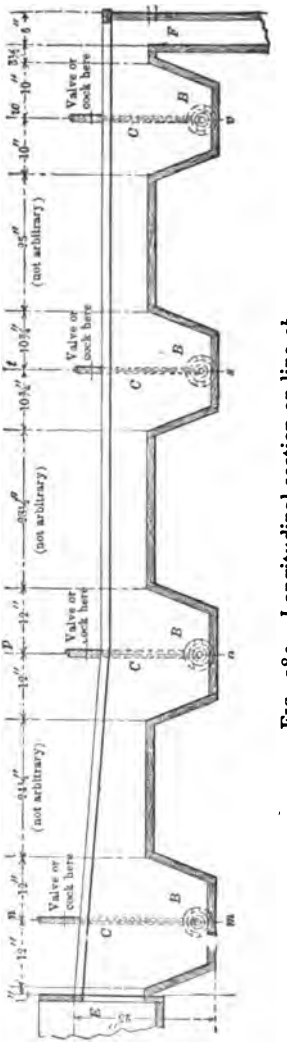

FIG. 182.—Longitudinal section on line *ab*.

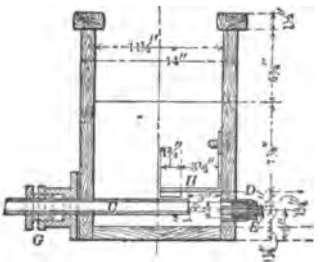

FIG. 183.—Section on line *vw*.

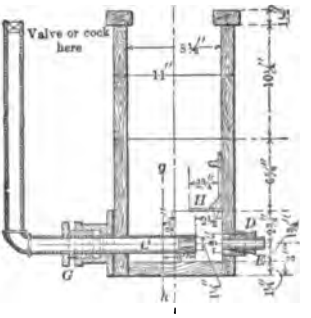

FIG. 184.—Section on line *mn*.

concentrate, only that it is not customary to provide an artificial bed, it being formed by a portion of such coarse material as enters the compartment.

Classifiers for Jig Work.—There is a multitude of classifiers of the free settling type. A good classifier for jig work is the Richards-Coggin shown in Figs. 181, 182, 183, and 184. Richards in his work on "Ore Dressing" gives the capacity of a Richards-Coggins three-compartment classifier as being 75 tons per day. In another mill the capacity of a four-compartment classifier was 58 tons per day, and a third classifier had 45 tons capacity and used 60 gal. of rising water per minute. In other mills the capacity ranged from 30 to 75 tons per day of 24 hours. Classifiers should have a supply of water independent of the supply for the rest of the mill. The supply pipes leading to the classifier should be of sufficient size so that the regulation of one compartment will not affect the work of the others.

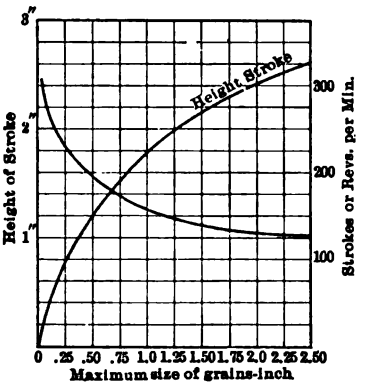

FIG. 185.

The average relation of number of revolutions and length of stroke to maximum size of ore fed for a Harz jig is given by the curves of the diagram, Fig. 185. The larger the pieces treated, the more stroke must be given to open the grains of the bed and give the heavier pieces chances to settle through the lighter. The number of strokes per minute cannot exceed the relation $30\left[\frac{g}{2s}\right]^{\frac{1}{2}}$. For example, for a 2.5 in. maximum size, the proper stroke is 2.60 in. or 0.22 ft.; substituting this value for s in the formula, the maximum possible number of strokes is 188 per minute. This formula is obtained by doubling the time required for the particles of water to return to a state of equilibrium under the influence of gravity, after being pulsed upward by a down movement of the plunger. Where there is no suction the water has zero velocity at the end of the stroke, but this would only be possible at the end of the down movement of the plunger, if the latter was suddenly abolished, the water being allowed to return to a balance with diminishing velocity. The pull of the ordinary plunger causes the water to go down through the bed with a uniform velocity; hence the suction.

The larger the maximum pieces treated, the deeper must be the bed. It will be evident that to support a concentrate pen column, of only 2 grains depth, will require a longer bed column for large grains than small. For general conditions a practical rule may be laid down, that depth of bed in inches equals $2\text{-}1/2 + \frac{d}{10}$, where d equals the diameter of the largest piece in millimeters. The proper depth can easily be gotten by experimentation, provided there is sufficient drop between the screens, and this should not be less

than 2–1/2 in. A high drop is advantageous in getting the heavy grains at once near the screen free from the scouring and stirring up action, as the ore enters the compartments, the heavy grains remaining down and the light rising.

Water for Jigs.—The average use of water may be expected to be in gallons per minute $\frac{\sqrt{dia.\ feed\ (mm)} \times total\ spread\ in\ screen\ surface\ (inches)}{3.03}$. The horse-power will be nearly equal to $\frac{\sqrt{dia.\ feed\ (mm.)} \times area\ (sq.\ in.)}{5000}$.

Water is used far too lavishly in Harz jig practice. On the coarse jigs, free use of water is advantageous in overcoming the effect of suction, but it also tends to wash away much valuable middling. Since the tendency of the water is to increase in volume and velocity toward the overflow end, water should be introduced at a point under the plungers, although it is very frequently distributed from a longitudinal box running the length of the jig over the plunger compartments, a hole being provided in the box over each plunger with a piece of metal mounted on a pin hinge to permit of the openings being adjusted for any desired quantity of water. The water flowing into one compartment from the one above replaces to some extent the water lost from the plunger. The effect of this water is to deaden the action of the jig and is not nearly so effective in separation as water pulsed through the screen. It is true that large quantities of water increase the capacity of the jig very materially, but they do so at a sacrifice in quality of work.

Having determined from the test work what is the safe tonnage to feed to a jig of any given size and with careful use of water, the results attained in practice will often fall below the experimental figures, owing to reckless and indiscriminate use of water by the jigmen.

Movable Screen Jigs.—Power jigs in which a screen is caused to vibrate up and down in a tank of water are seldom used, except for small, transient or test operations. This form of jig has to be shut down at regular intervals to remove the material which has accumulated on the screens. Hand jigs with movable screens are very convenient for transient operations, such as cleaning up a dump or for mine lessees operating on a small scale. The dimensions of a hand jig are shown in Fig. 186.

Pulsator Jig.—The Richards pulsator jig has the advantages of compactness, with greater capacity per unit of screen surface per single compartment than a Harz. The rate of travel of concentrate and middling toward the discharges is much faster than with a Harz, and the jig has advantages with soft ores. It should do its best work in separating very heavy, single materials from quartz, and where the heavy mineral has been largely unlocked by light crushing. It is not recommended for classified gradings.

Jigging without Grading.—Of late years there has been some progress in the design of water jigs, which will do good work without close grading.

In large mills the number and cost of upkeep for grading screens are so great that a number of mills have turned to the new jigs. As has already been pointed out, the aim of jigging in all sulphide copper mills has been to remove

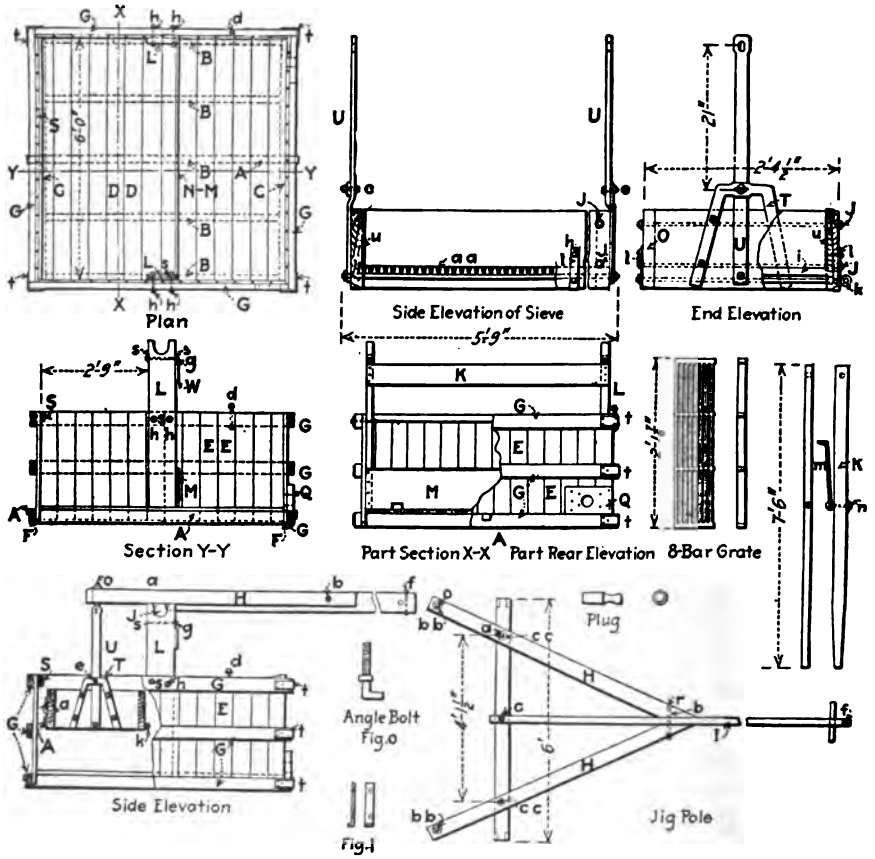

FIG. 186.

all concentrate grains, the balance being subjected to grinding and further concentration, it having been found that while a tailing low in metallic contents can be made, it is worth too much to be thrown away. Under these circumstances, close sizing is unnecessary, and a number of copper mills have abandoned Harz jigs and re-equipped with jigs of a Hancock type. The first jig of this kind was invented by H. R. Hancock, General Manager of the Moonta Mines in South Australia. In the United States this jig is manufactured by Allis Chalmers, the general arrangements of the jig being shown in Fig. 187. The jig is built in two sizes, the larger being 25 ft. long

by 4 ft. 2 in. wide and 5 ft. 9 in. high over all dimensions, and the smaller being 18 ft. 6 in. by 4 ft. 5 in. by 5 ft. The larger jig has 6 hutch compart-

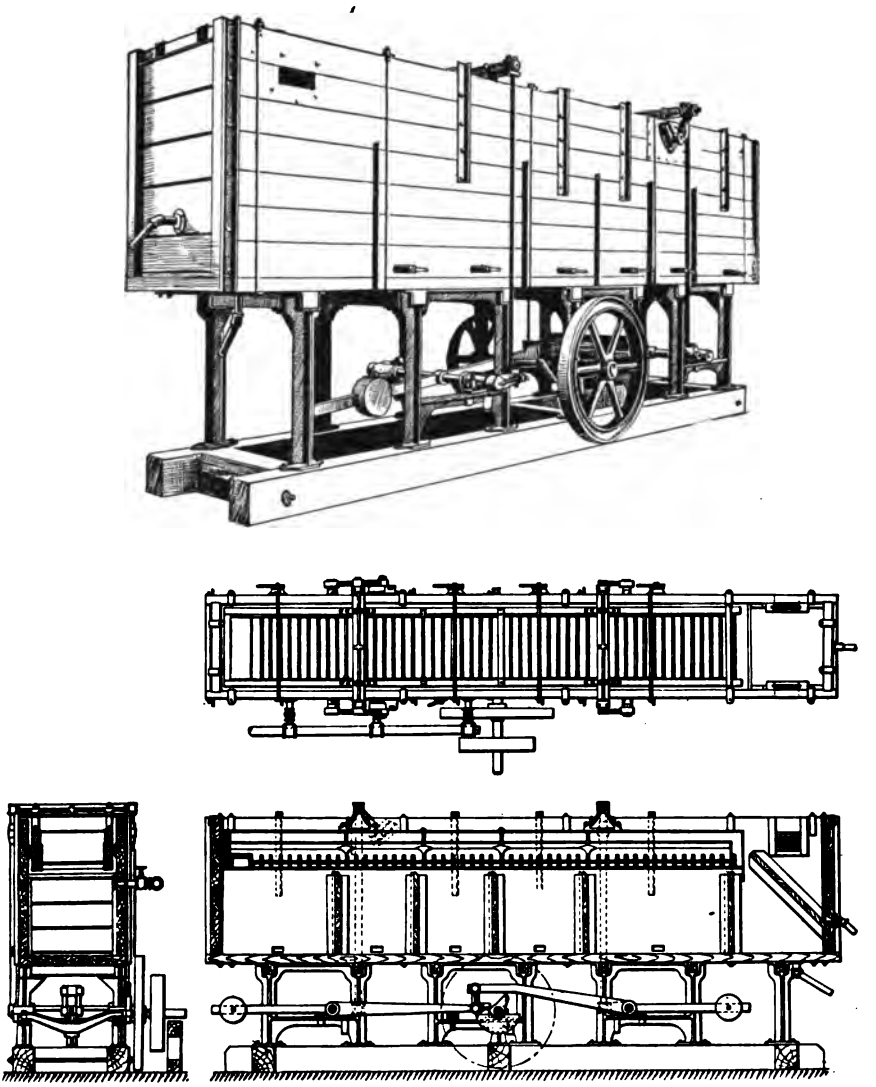

FIG. 187.

ments, and the small one 5. The sieve is movable and has a forward and back movement, as well as up and down movement. The forward component gives great capacity, owing to positive advance of the ore by

mechanical means, and introduces the interstitial factor of separation, which is explained under the head of concentrating tables. The up and down component gives the same effect as in the Harz jig and the combined stroke movement tends to separate all the heavy mineral, regardless of size, for a large range of sizes. In other words, the separation in any compartment tends to be according to specific gravity, regardless of size. The drawing down of the fine pieces into the hutches of the first three compartments would produce a suction effect if means were not provided for regulating it, and this is done by streams of water introduced under the screens. The first compartment hutch has the finest screen, is operated with a bed, and produces the finest concentrate. The second compartment contains a coarser screen and bedding, and makes a coarser concentrate. The third compartment has a screen with holes larger than the maximum sized piece fed to the jig, and either makes its own bed, or is provided with very coarse bedding. The interstitial factor has more influence in settlement than the factors described in the theory of Harz jigging, and it would be expected in practice that the capacity of the jig in making concentrates would be very great, which it is. The middling hutches are bedded with lighter material than the ones for concentrates. The last hutch has screen openings larger than the maximum piece fed to the jig. The advantages claimed for these jigs are large capacity and small horse-power. The large size jig has capacities as high as 800 tons per 24 hours and the power (4 to 5 h.p.) is less than for an equal capacity of Harz jigs. Very much less water is used than with the Harz jigs for the same capacity, since the ore is moved mechanically, and the only water required is for separation, and for keeping the hutches clear. The machine apparently cannot handle material much coarser than 9 mm., but as this is within the upper screening limit of many ores it is not a disadvantage. A wide range of size can be treated, but it is quite questionable if it can be used on ores having much light middling, and would seem as though the tendency of the machine would be either to make a low-grade sandy middling, or a high tailing. At the Federal Lead Company's plant at Flat River, Mo., where the Hancock displaced the Harz jig, the screen line formerly consisted of 9, 7, 4 and 2 mm. trommels, 48 in number. There were 132 Harz jigs occupying a floor space of nearly 15,000 sq. ft., and requiring about 250 horsepower to drive. The Hancock jigs, nine in number, which have taken their place, have a capacity of 400 tons each, and receive feed, ranging from 9 to 1 mm. The average tails from these jigs contain about 0.7 per cent. lead. The decrease in floor space effected by them, 11,000 sq. ft., and the saving in power, 300 horse power, which includes reductions in the power to drive the jigs, and from doing away with screening and auxiliary machinery, which was necessary with a Harz jig equipment. The Hancock jig concentrate is 4-1/2 per cent. higher than the Harz jig concentrate. Increase in mill capacity effected by the change is 50 per cent., and the milling costs have been

decreased 25 per cent. The feed to the jigs contains about 3-1/2 per cent. lead, and a screen analysis of the tailings gives the following results:

HANCOCK JIG TAILING, 0.685 PER CENT. LEAD

Screen size, mm.	Weight, per cent.	Assay lead, per cent.	Value, per cent.
+ 9	3.9	1.46	8.3
+ 8	4.6	0.70	4.7
+ 7	6.0	0.48	4.2
6	11.3	0.78	12.8
4	31.3	0.80	36.5
2	23.1	0.37	12.4
70 mesh	18.8	0.33	9.1
− 70 mesh	1.0	8.35	12.0

The troubles which have developed with the jig on the Southeastern Missouri field have been the tendency of the coarse concentrate to work into the middling compartment, the escape of fine mineral into the tailing box and variations in the depth of bed, with changes in the grade of ore. Very little artificial bedding is employed in the way of ore, iron shot or slugs. The bulk of the lead lost in the tailing, as the analysis shows, is due to the presence of true middling. There is also a limit to the free lead which can be removed by the jig and which is manifest by the 70-mesh material. At the Great Falls plant of the Anaconda Copper Company, the limit of free mineral, in this case copper sulphide, is 0.91 mm. Considering the low content of the feed to these jigs and the ease with which they are unlocked in light crushing, there seems good metallurgical reasons for their adoption in place of Harz jigs, and from the commercial side, the gain in their use is immense. In the Flat River district the Hancock jig used about 800 gal. of water per minute.[1]

The Woodbury jigging system, the units of which are manufactured by the Power and Mining Machinery Co., has been successfully installed in a number of mills. The main novelty of the jig is the slime baffle, use of which has been mentioned in the chapter on Testing. The jigs used are of the Harz pattern.

Air Jigs.—Jigs using air as a pulsing medium, work under the disadvantage that they require closer sizing to accomplish a separation. The resistance that air offers to motion is so slight, and the velocities obtained are so small, since the distance fallen through is so small that the resistance to fall can be neglected. For all intents and purposes, a body may be considered to fall through air with a velocity that it would have in a *vacuo*. When bodies fall in fluids with equal velocities, the ratios of their diameters are given by $\frac{d'}{d''} = \frac{s'' - s}{s' - s}$. If s is zero (it will be negligible when representing the specific gravity of air), then the relation becomes $\frac{d'}{d''} = \frac{s''}{s'}$. That is, the

[1] C. T. Rice, "Milling in Southeast Missouri," July 5, 1913, *Eng. and Min. Jour.*

ratio for free settling cannot be greater than $\frac{s''}{s'}$. Since bodies fall faster in air, a much greater number of pulsions can be given in an air jig, and by this means, the rapidity of separation can be increased to a point where it compares favorably with water jigging.

Very few of the air jigs which have been placed on the market have been a success mechanically, but the faults which they have developed have not been due so much to the poorness of the separation principle as to improper mechanical means to obtain it. For example, in the Krom air jig the discharge of the concentrate was effected by a revolving wheel, and unless this wheel could be run at variable speeds, proportional to the rate of accumulation of concentrate, there could be no good separation, a consideration which it was impossible to attain. In the Plumb air jig, which recently appeared, the rear or feed end is formed into a pen by a baffle which occupies the whole width of the jig; the ore is fed on the bed side of the baffle and tailing discharge at a point opposite to the concentrate. The separation made by this jig is quite perfect, and it adjusts itself automatically to changes in the rate and grade of feeding. One advantage possessed by air jigs over water jigs lies in the fact that there is no forward advance of the whole bed to the marked degree that attains in water jigs; hence separation forces have full play. The Sutton-Steele table is in reality a jig, air being pulsed up through a reciprocating table deck, just as it would be with an air jig pure and simple. This machine has a differential head motion, which advances the ore, while it is under the influence of air pulsions. Separation of the concentrate and sand layer is effected by inclining the table, which allows the sand to slide away from the concentrate. The appearance of the table while in operation resembles that of a concentrating wet table, described later on.

CHAPTER XI

PREPARATION FOR SAND AND SLIME CONCENTRATION

It has been mentioned in an earlier portion of this book that it is always advisable to regrind and treat middling, either on separate jigging machines, or by fine concentrating devices. Unless the limit of screening is very high, it will hardly ever pay to have a jig middling line. It will usually be found commercially better to regrind all middlings from the jigs to the limit for concentrating table work, and prepare it for sand and slime treatment. Classes *d*, *e* and *f* ores, page 17, will occasionally have to be crushed down to a limit lower than permissible with rolls, and machines for reducing any of these classes below the limit of roll crushing, belong to the crushing plant equipment. Of the number of problems submitted to the metallurgist, those involving classes *d* and *e* are few; consequently, fine crushing machines are most commonly used for comminuting jig middling, the fine crushing machines using water. The principal machines for fine wet grinding are California stamps, edgerunners of all kinds, and tube mills.

Stamp Mills.—Stamps are seldom used in concentration, except as an adjunct of amalgamation and cyanidation in the treatment of gold ores. Their employment in crushing jig middling is very rare. Where cyanide is used to extract gold from ores, either separately or in conjunction with amalgamation, the tendency of late years has been to increase the weight of the stamp, and this weight increase has followed improved methods in handling slime. Cyanidation is largely a chemical process of solution, and the more finely divided the ore, the better will the gold be dissolved. The extra heavy stamps also give more capacity per unit of floor space occupied than the lighter ones. The objection to stamps for comminuting middling is that they have small capacity per head, and capacity is obtained by spreading a more or less number of heads transversely to the lines of flow of the mill, causing a loss of head in spreading out the launders to reach the stamps, and a further loss of head in gathering it again below. Stamps require massive foundations and do more crushing work than is required for the ensuing sand and slime concentration. That is, more slime is made, owing to the grain after being once broken, being repeatedly subjected to comminuting forces before being able to escape from the very restricted discharge. In the Nissen stamp each mortar comprises a base portion and around the upper part, which is approximately the height of the shoe and boss, fits a cylindrical screen with comparatively little clearance between it and the stamp. This gives an area of discharge opening far greater than is found in the ordinary stamp with

only a single front discharge, but even with the Nissen stamp, more fines are made than with other forms of fine grinding machinery.

If h is the height through which a stamp falls, the time to fall through this height equals $\left[\frac{2h}{g}\right]^{\frac{1}{2}}$ and since, roughly, an equal time t must elapse before the cam can engage the tappet, and since further the time required by the cam to raise the stamp to height h can be called $0.67\left[\frac{2h}{g}\right]^{\frac{1}{2}}$, an approximate expression for the time required for a complete cycle of the stamp is $1.67\left[\frac{2h}{g}\right]^{\frac{1}{2}}$. As there are two cams at 180° apart, the time for a cycle equals $\frac{30}{d}$, where d is the number of drops per minute, or d equals $77\left[\frac{1}{h}\right]^{\frac{1}{2}}$. Since 77 is an approximate factor, the expression for the number of drops may be written $d = A\left[\frac{1}{h}\right]^{\frac{1}{2}}$. The work done by the stamp is $A\left[\frac{1}{h}\right]^{\frac{1}{2}} \times Wh$ or H.P. $= \frac{AW(h)^{\frac{1}{2}}}{33{,}000}$; therefore as the weight and height increase, the crushing effect increases, but it will be evident that the crushing effect increases much more rapidly with increase of weight than it does with increased height of drop. Further, increased weight of the stamp adds very little to the cost of the mortars and the frames of the stamp, and is not in proportion to the non-effective consumption of power used in overcoming friction. Appar ntly the most economical stamp is a heavy one with low lift and having a large number of drops per minute. For concentration problems, a heavy stamp is required, but not of the extreme weight which is employed in some modern gold-milling operations. For concentration work the stamp must be coupled with low discharge and large screen area. The Nissen stamp more nearly meets these conditions than any other.

The growth in the weight of stamps can be seen from the fact that the early Colorado and California mills had stamps ranging in weight from 500 to 600 lb. and 750 to 850 lb. respectively; whereas with the advance in the handling of slimes in cyanide treatment of gold and silver ore the weight of stamps has run up to very nearly one ton. For grinding jig middling in concentration work with a California stamp, the weight of the stamp should be from 1000 to 1200 lb. for ordinary ores, and there should be no height of discharge. Given the horse power developed for operating the stamp it may be calculated that the capacity per head is roughly for a California or single discharge mortar $\frac{80 \times \text{H.P.}}{\text{mesh of screen}}$, and for a double discharge mortar about 25 per cent. more. The theoretical horse power is $\frac{dWh}{33{,}000}$. The actual horse power can be gotten very nearly from the theoretical by multiplying this expression by 1.1, reducing this factor 0.005 for every 200 lb. increase in weight over 800 lb. Stamps cannot be effectively used for discharges coarser than

8 mesh, and for reasons stated their use in concentration mills should be avoided. For concentrating ore, I believe the best wearing metals obtainable should be employed for shoes and dies. Standard dimensions of the chrome steel parts, made by the Chrome Steel Company, are shown in the table. I prefer shoes and dies of this material for concentrating problems. The use of chrome stamp heads, cams and tappets is optional. The crushing of ore by stamps is an operation which pertains very particularly to the metallurgy of gold and silver, and for further information on the subject reference should be made to such works as "A Handbook of Gold Milling" by Louis, Rickard's "Stamp Milling of Gold Ores," Richard's "Ore Dressing."

Chilian Mill.—For fine crushing hard ores, the Chilian mill is a most excellent machine. It has large capacity, occupies little floor space in pro-

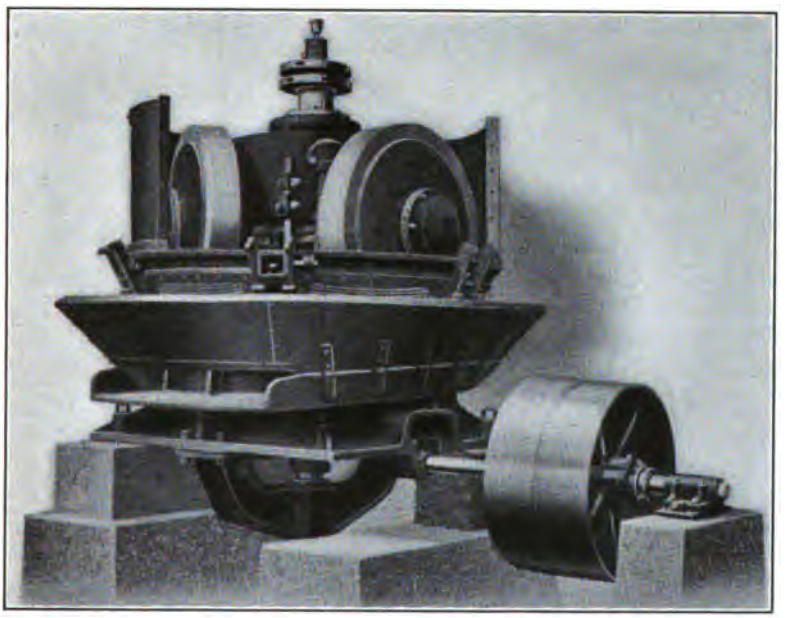

FIG. 188.

portion to the rate at which it will crush, and is quite free from vibration. The Chilian mill is an improved form and outgrowth of the *arrastra*, a crude form of grinding device used for crushing and extracting gold from its ores and consisting of a vertical rotating post or center, horizontal arms secured to the center, and to which are fastened heavy drag stones by chains. The drag stones rest on the pavement of a circular enclosure and the ore is fed into this enclosure and crushed by the weight of the stones dragged over it. In the Chilian mill the stones are replaced by rollers and the wood and rock construction of the arrastra is replaced by iron and steel. The Evans-Waddell mill is shown in Fig. 188, with part of the housing removed and in section

DIMENSIONS AND APPROXIMATE WEIGHTS OF STANDARD "ADAMANTINE" CHROME STEEL PARTS, ALSO STEMS AND CAM SHAFTS FOR VARIOUS WEIGHT STAMP MILLS

Shoe

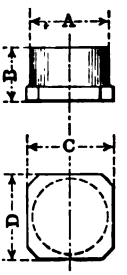

Die

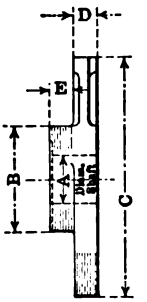

Cam

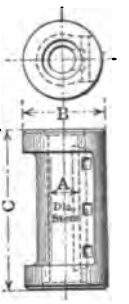

Tappet

Weight of stamps, lb	Shoe: Dimensions, in. A	B	C	D	E	Wt., lb.	Die: Dimensions, in. A	B	C	D	Wt., lb.	Cam: Dimensions, in. A	B	C	D	E	Wt., lb.	Tappet: Dimensions, in. A	B	C	Wt., lb.
850	8-½	8	3-⅝	4-⅝	5-¼	149	8-¾	6	9-½	9-½	117	5-⅜	12	32	2-½	2-¾	212	3-⅛	9	12	138
900	8-½	8	3-⅝	4-⅝	5-¼	149	8-¾	6	9-½	9-½	117	5-⅜	12	32	2-½	2-¾	212	3-⅛	9	12	138
950	9	8	4	4-¾	5-½	170	9-¼	6	9-½	9-½	121	5-⅜	12	32	2-½	2-¾	212	3-¼	9	12	138
1000	9	8	4	4-¾	5-½	170	9-¼	6	9-½	9-½	121	5-¾	13	32	2-½	2-¾	240	3-⅜	9-⅛	14	153
1050	9	8	4	4-¾	5-½	170	9-¼	6	9-½	9-½	121	6	13	32	2-½	2-¾	240	3-½	9-⅛	14	153
1150	9	9	4	4-¾	5-½	183	9-¼	7	9-½	9-½	138	6-½	13-½	32	2-½	3	255	3-⅝	9-¼	15	169
1250	9	9	4	4-¾	5-½	183	9-¼	7	9-½	9-½	138	6-1⅝₁₆	13-½	32	2-½	3	255	3-¾	9-¼	16	180
1400	9	10	4	4-¾	5-½	205	9-¼	8	9-½	9-½	156	6-1⅝₁₆	14	32	2-⅝	3-⅛	280	4	9-½	17	212
1500	9	10	4	4-¾	5-½	205	9-¼	8	9-½	9-½	156	6-1⅝₁₆	14	32	2-⅝	3-⅛	280	4	9-½	17	212
1600	9	10	4	4-¾	5-½	205	9-¼	8	9-½	9-½	156	6-1⅝₁₆	14	32	2-⅝	3-⅛	280	4	9-½	17	212
1800	9-½	14	4	4-¾	5-½	300	9-⅝	8	9-⅝	10-⅛	170	7	14-½	32	2-⅝	3-¼	295	4	10	18	215

Allow for variations in weights of castings and forgings 2-1/2 per cent. over or under.

in Fig. 189. The crushing rollers, 25, are three in number and are supported on shafts, 23, which are forced into recesses in the spider 13; the latter is supported upon the spider ball 15, which is a sliding pit on the drive shaft in the center. The sliding ball arrangement allows the rollers and spiders to rise and fall with variations of depth of ore between the rollers, and the crushing ring or die 32, and at the same time permits the rollers to turn through a limited angle accommodating itself to variations of depth due to wear at different

DIMENSIONS AND APPROXIMATE WEIGHTS OF STANDARD "ADAMANTINE" CHROME STEEL PARTS, ALSO STEMS AND CAM SHAFTS FOR VARIOUS WEIGHT STAMP MILLS

Stamp head

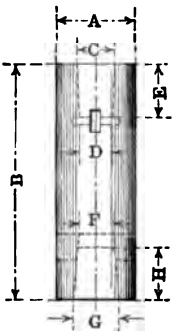

Stem

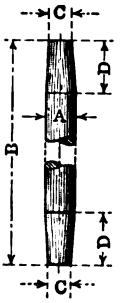

Cam shaft

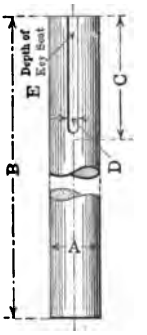

Weight of stamps, lb.	Dimensions, in.								Wt., lb.	Dimensions in ft. and in.				Wt., lb.	Dimensions in ft. and in.					Wt., lb.
	A	B	C	D	E	F	G	H		A	B	C	D		A	B	C	D	E	
850	8-½	18	3-⅛	2-13/16	6	4-⅛	5-⅛	5-¾	233	3-⅛	14-0	2-13/16	6	365	5-⅜	14-6	14	1-½	⅝	1113
900	8-½	20	3-3/16	2-15/16	6	4-⅛	5-⅛	5-¾	255	3-3/16	14-6	2-15/16	6	390	5-⅜	14-6	14	1-½	⅝	1113
950	9	17	3-¼	3	6	4-½	5-¼	6-⅛	260	3-¼	14-6	3	6	405	5-½	14-6	16	1-½	¾	1170
1000	9	17	3-⅜	3-⅛	6	4-½	5-¼	6-⅛	260	3-⅜	14-6	3-⅛	6	436	5-¾	14-6	18	1-½	¾	1277
1050	9	18	3-½	3-¼	6	4-½	5-¼	6-⅛	278	3-½	14-6	3-¼	6	470	6	14-6	18	1-½	¾	1394
1150	9-⅛	20	3-⅝	3-5/16	6	4-½	5-¼	6-⅛	313	3-⅝	14-6	3-5/16	6	505	6-½	14-6	18	1-⅝	¾	1630
1250	9-⅛	22	3-¾	3-⅜	6	4-½	5-¼	6-⅛	350	3-¾	14-6	3-⅜	6	540	6-15/16	14-6	18	1-¾	¾	1860
1400	9-¼	23-½	4	3-⅝	6	4-½	5-¼	6-⅛	362	4	14-6	3-⅝	6	616	6-15/16	16-0	18	1-¾	¾	2050
1500	9-¼	26-½	4	3-⅝	6	4-½	5-¼	6-⅛	420	4	15-6	3-⅝	6	658	6-15/16	16-0	20	1-¾	¾	2050
1600	9-¼	30-½	4	3-⅝	6	4-½	5-¼	6-⅛	498	4	16-0	3-⅝	6	680	6-15/16	16-0	20	1-¾	¾	2050
1800	9-¾	35	4	3-⅝	6	4-½	5-¼	6-⅛	665	4	15-0	3-⅝	6	637	7	16-0	20	1-¾	⅞	2090

points in the rotation of the rollers, or to accidental differences in the depth of the ore from point to point. Rotation is secured by a second spider, 9, rigidly secured to the shaft, but flexibly connected to the spider, 13. As the crushing surfaces wear away, the driving spider, 9, must be lowered from time to time by screwing down the nuts, 6 and 7. Crushing is effected by the weight of the spider 13 and the crushing rollers, 25. The feed is introduced into the launder encircling the drive spider, 9, and is carried through the 3 feed pipes, 22, to a point in front of the rollers. In other types of Chilian mill, such as the Monadnock, Fig. 190, the individual rollers are hinged at

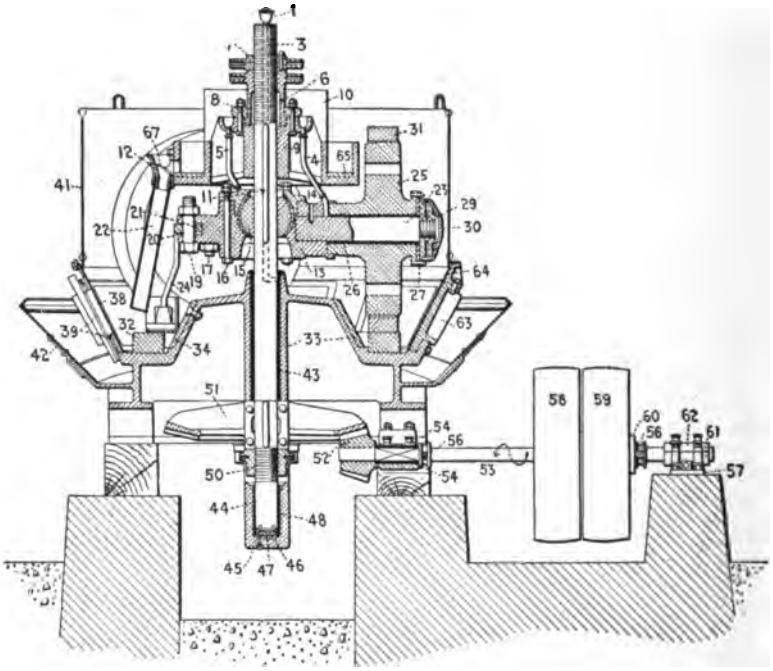

No. 1. Oil Cup.
No. 3. Vertical Shaft.
No. 4. Oil Hose for Bearing of Crusher Roller.
No. 5. Oil Hose for Ball and Socket Bearing.
No. 6. Capstan Adjusting Nut.
No. 7. Capstan Lock Nut.
No. 8. Driver Split Collar.
No. 9. Driver.
No. 10. Driver Splash Guard.
No. 11. Driver Feather Keys (2)
No. 12. Feed Elbows (3).
No. 13. Spider.
No. 14. Spider Cap.
No. 15. Spider Ball.
No. 16. Spider Cap Bolts (3).
No. 17. Driver Studs (3).
No. 18. Driver Stud Bushings (not shown) (3)
No. 19. Spider Driving Bolts (3).
No. 20. Spider Driving Bolt Bushings (3)
No. 21. Driving Links (3)
No. 22. Feed Pipes (3).
No. 23. Roller Shaft (3).
No. 24. Feed Scraper to throw inward (not shown) (1)
No. 25. Crushing Roller (3).
No. 26. Crushing Roller Bronze Bushing (3)
No. 27. Crushing Roller Bronze Thrust Collar (3)
No. 29. Crushing Roller Thrust Nuts (3).
No. 30. Crushing Roller Oil Covers (3).
No. 31. Crushing Roller Tire (3).
No. 32. Crushing Die.
No. 33. Mortar.
No. 34. Mortar Inside Liner (12)
No 38. Screen (6).
No. 39. Steel Screen Frame with Wood Lining.
No. 41. Mortar Steel Housing.
No. 42. Mortar Splash Guard.
No. 43. Vertical Shaft Upper Bearing, Bronze Bushing.
No. 44. Vertical Shaft Step-Bearing, Bronze Bushing.
No. 45. Step Bearing Upper Steel Button.
No. 46. Step Bearing Middle Steel Button.
No. 47 Step Bearing Lower Steel Button.
No. 48. Bridge Tree.
No. 50. Vertical Shaft Split Collar.
No. 51. Bevel Gear.
No. 52. Bevel Pinion.
No. 53. Pinion Shaft.
No. 54. Pinion Shaft Box (2).
No. 56. Pinion Shaft Collar (2)
No. 57 Pinion Shaft Box Sole Plate.
No. 58. Driving Pulley.
No. 59. Loose Pulley (when specified)
No. 60. Loose Pulley Bronze Bushing.
No. 61. Outboard Bearing Base.
No. 62. Outboard Bearing Cap.
No. 63. Column for Mortar.
No. 64. Ring Section for Mortar.
No. 65. Bottom Liner for Driver.
No. 66. Cap for Scraper Bar (not shown).
No. 67 Feed Elbow Bushing.

FIG. 189.

the spider and accommodate themselves individually to varying depths of crushing bed. The spider is rigidly fixed to the shaft and does not assist in crushing by its weight. In some designs of this character the axis of the individual shafts of the rollers is normally inclined toward the center when the machine is at rest. When the machine is in operation, the shafts tend to take a horizontal position owing to centrifugal force and the upward thrust produced on the shaft is resisted by thrust bearings. This introduces complication in design, but with the advantage that there is greater downward pressure on the ring dies to aid in crushing. In the Evans-Waddell

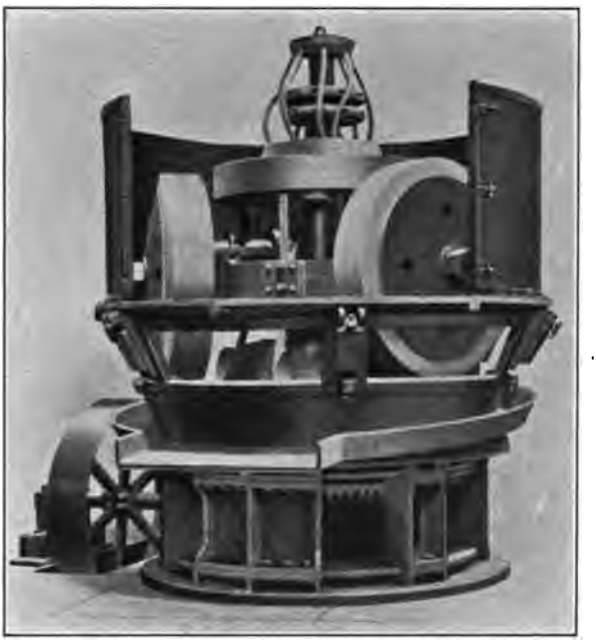

FIG. 190.

mill extra crushing pressure is obtained by using the additional weight of the spider. The Heberli mill has inclined tires and hinged rollers and obtains much greater effect from centrifugal force than Chilian mills with nearly horizontal rollers hinged to the spider. Akron mills are improved forms of the type where the rollers are hinged individually to a fixed spider.

The capacity of Chilian mills varies widely according to the ore. Crushing soft ores from 3/4 in. to 40 mesh the capacity will run about 100 tons per day of 24 hours; to 20 mesh from this upper limit about 175 tons; and to 10 mesh about 225 tons. On very hard ores the capacity from 3/4 in. to 40 mesh would not exceed 40 to 50 tons per 24 hours, and on medium hard ores 75 tons per 24 hours, with proportionate increases in capacity as the discharge mesh becomes coarser. Chilian mills revolve about 25 to 35 times per minute

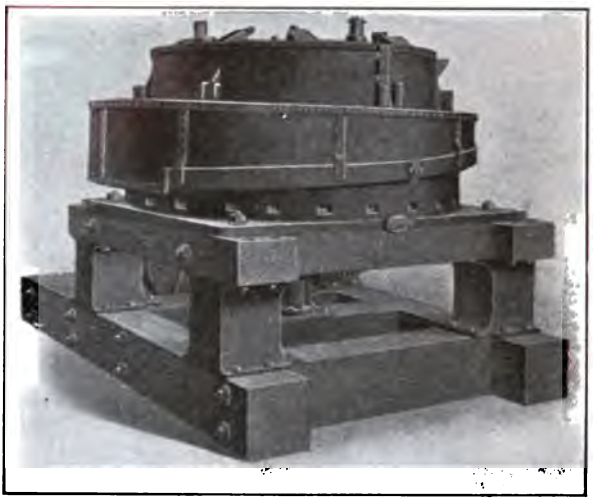

FIG. 191.

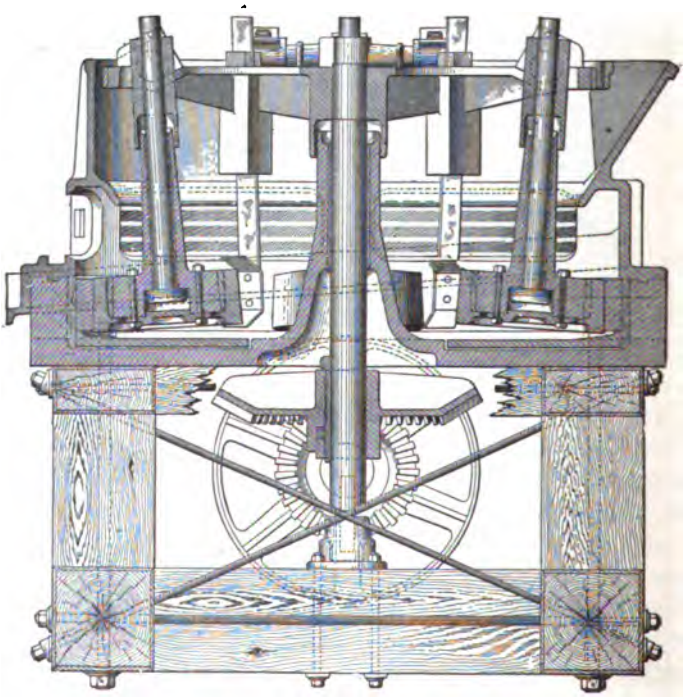

(Sectional View.)

FIG. 192.

and require from 25 to 70 h.p. The weight of a Chilian mill is from 25 to 30 tons. The consumption of wearing metal can be taken as 0.5 lb. per ton of ore crushed. The ratio of tire wear to die wear being 2 to 1 or 0.333 lb. to 0.166 lb.

CHILIAN MILLS

		Lb.
	7 ft. Monadnock	
Ring Die	84 in. O.D. 64 in. I.D., wearing face 10 in., thickness 5 in.	3271
Tire	54-1/2 in. O.D. 46-1/2 in. I.D., wearing face 10 in., thickness 4 in.	1784
	6 ft. Monadnock	
Ring Die	71 in. O.D. 54-1/2 in. I.D., wearing face 8-1/4 in., thickness 5-3/4 in.	
Tire	55 in. O.D. 46-1/2 in. I.D., wearing face 8 in., thickness 5-1/4 in.	1520
	5 ft. Monadnock	
Ring Die	60 in. O.D. 46 in. I.D., wearing face 7 in., thickness 5 in.	1630
Tire	44 in. O.D. 35-3/4 in. I.D., wearing face 7 in., thickness 4-1/8 in.	1020
	6 ft. Akron	
Ring Die	72 in. O.D. 56 in. I.D., wearing face 8 in., thickness 5 in.	2250
Tire	55 in. O.D. 46 in. I.D., wearing face 8 in., thickness 4-1/2 in.	1620
	6 ft. Evans-Waddell	
Ring Die	72 in. O.D. 55-1/2 in. I.D., wearing face 8 in., thickness 6 in.	2800
Tire	56 in. O.D. 47-3/4 in. I.D., wearing face 8 in., thickness 4-1/8 in.	1510

Huntington Mills.—Huntington mills are quite popular for ores of medium hardness, and have the advantage over Chilian mills of discharging more rapidly. On the other hand, they do not develop sufficient crushing force from centrifugal force to break a large piece of tough ore, except by accidental rebounds of the muller. A general view of a 6-ft. mill is shown in Fig. 191 and in section by Fig. 192, the size more commonly used being 5 ft. in diameter. The rollers or mullers are suspended from the spider, which is secured to a central drive shaft near the top of the housing, at the points marked *AA* Fig. 193. It will be noted that the suspension is double and made in such a way that as the spider revolves the suspended rollers can only fly out in a radial direction, their limit of outward movement occurring when they encounter the fixed wearing or ring die placed in the bottom of the machine. The screens through which discharge takes place are carried above the ring die as will be noticed in Fig. 193. The capacity and other figures pertaining to these mills are given in the table.

Chilian vs. Huntington Mills.—The question of choice between a Chilian and a Huntington mill lies in the hardness and size of the ore to be crushed. Huntington mills of 5 ft. size are incapable of taking a piece over 3/4 in. size, and with this size of very hard ore their capacity is limited. Their best range is below 1/4 in. and with a screen opening not finer than 40 mesh. On soft or medium ores they have a good capacity and do not make as much slime as Chilian mills, for the reason that the pressure of crushing is less and the circular wave created by the rapid revolution and carried along the screens in front of each roller is quite efficient in ridding a machine of undersize. On

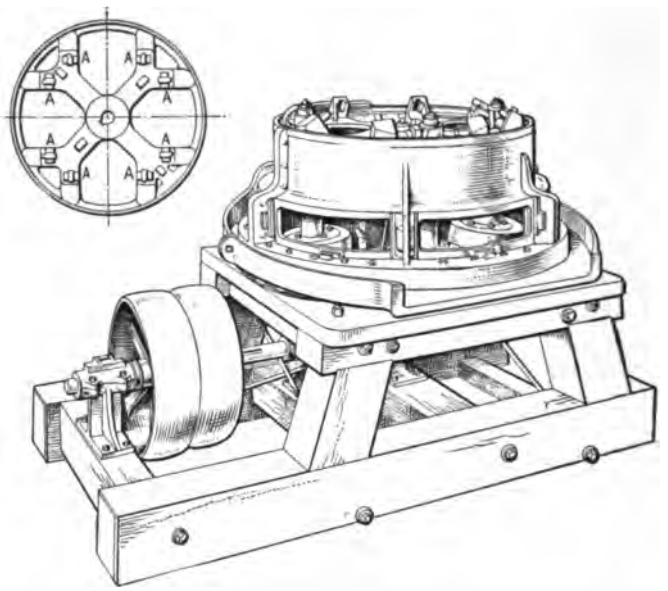

FIG. 193.

Size of mill	Size of ore fed to mill	Capacity in tons per 24 hours	Size of screens on discharge	Water required per hour in gallons	Horse-power
3-1/2-ft.	3/4 in. ring	8 to 12	30 mesh	750	5 to 7
5 -ft.	3/4 in. ring	20 to 25	30 mesh	1000 to 1200	8 to 10
6 -ft.	3/4 in. ring	40 to 50	30 mesh	1400 to 1700	15 to 20
6-ft. Anaconda	3/4 in. ring	60 to 75	30 mesh	1500 to 2000	20 to 25

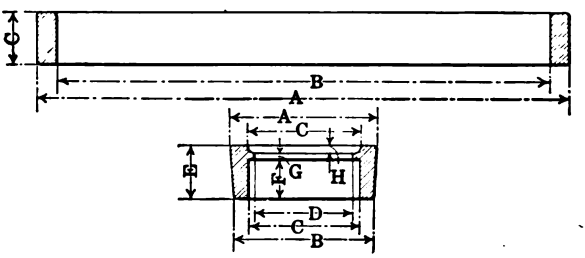

FIG. 194.

RING DIE AND ROLLER FOR HUNTINGTON MILL

	Ring Die			Roller	
	5-ft. mill	6-ft. mill		5-ft. mill	6-ft. mill
A.....	61 in.	79 in.	A	17-1/8 in.	22 in.
B.....	56-1/4 in.	72 in.	B	16-3/8 in.	20-1/2 in.
C.....	6 in.	8 in.	C	13-1/8 in.	16-1/2 in.
			D	11-1/8 in.	.....
			E	6 in.	8-1/2 in.
			F	4-5/8 in.	.....
			G	3/8 in.	.....
			H	1 in.	.....
Weight...	750 lb.	1850 lb.		160 lb.	330 lb.

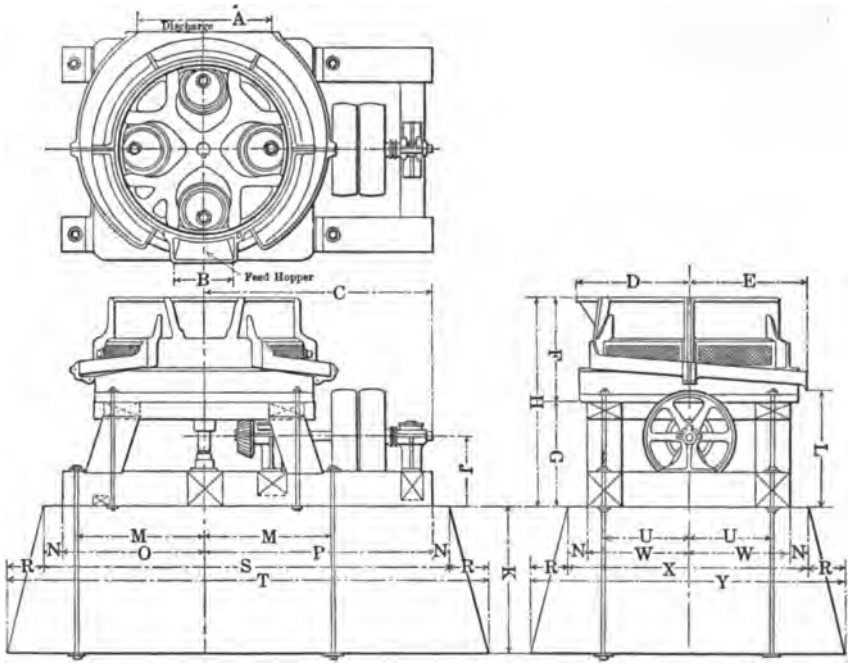

FIG. 195.

Size of mill	A	B	C	D	E	F	G	H	J	K
	ft. in.	in.	ft. in.	ft. in.	ft. in.	ft. in.	ft. in.	ft. in.	in.	ft. in.
3–1/2 ft.....	2 3	19	5 2–1/4	2 4–1/4	2 3	2 8	2 4	5 0	15–1/2	3 6
5 ft.....	3 9–1/2	20	6 2–7/8	3 0–1/2	3 2	2 10	2 10–1/4	5 8–1/4	22–1/2	4 0
6 ft. standard....	4 6	20	7 9–1/8	3 6–7/8	3 11	3 5–1/4	3 1	6 6–1/4	20–1/2	5 6
6 ft. extra heavy Anaconda.	4 0	20	8 9–5/8	4 1	4 2–3/4	3 9–3/8	3 9–1/2	7 6–7/8	23–1/2	5 6

Size of mill	L	M	N	O	P	R	S	T	U
	ft. in.	ft. in.	in.	ft. in.	ft. in.	in.	ft. in.	ft. in.	ft. in.
3–1/2 ft.....	3 0–3/4	2 3	5–1/2	2 6	4 8	6	8 1	9 1	18–3/
5 ft.....	3 2–1/2	3 5–1/2	6	3 10	6 2	12	11 0	13 0	2 3–1/44
6 ft. standard....	3 8–1/8	3 11	6	4 4–1/4	7 1–3/4	16–1/2	12 6	15 3	2 8–1/4
6 ft. extra heavy Anaconda.	4 5–3/8	4 5–1/2	6	5 0	9 0	16–1 '2	15 0	17 9	3 4–1/4

Size of mill	W	X	Y	Size of pulley	Ratio of gears	R.p.m. of pulley	Foundation bolts
	ft. in.	ft. in.	ft. in.	in. in.			in. ft. in.
3–1/2 ft.....	2 0–1/2	5 0	6 0	20 × 6–1/2	1 to 1–1/2	135	4–1 × 4 6
5 ft.....	2 9	6 6	8 6	30 × 8–1/2	1 to 2	140	4–1–1/4 × 5 6
6 ft. standard....	3 3	7 6	10 3	36 × 10–1/2	1 to 2	110	4–1–1/2 × 7 4
6 ft. extra heavy Anaconda.	4 0	9 0	11 9	32 × 12–1/2	1 to 3	165	4–1–1/2 × 7 6

All mills have four rollers except the 3–1/2-ft., which has three.
All mills have five screen openings except the 3–1/2-ft., which has three.
The curb is made so that mill can discharge either side by turning curb 180 deg.

the other hand, on the point of repairs, the Huntington mill requires constant attention. The mill will not take care of much variation in overfeeding either of ore or water. One great difficulty with a Huntington arises from the non-rotation of the roller spindles. These are supposed to be lubricated once a day, but since this entails stopping the mill, it is too frequently overlooked with the consequence that the rollers fail to revolve freely and become worn flat sided. An improved form of roller and spindle is shown in Fig.

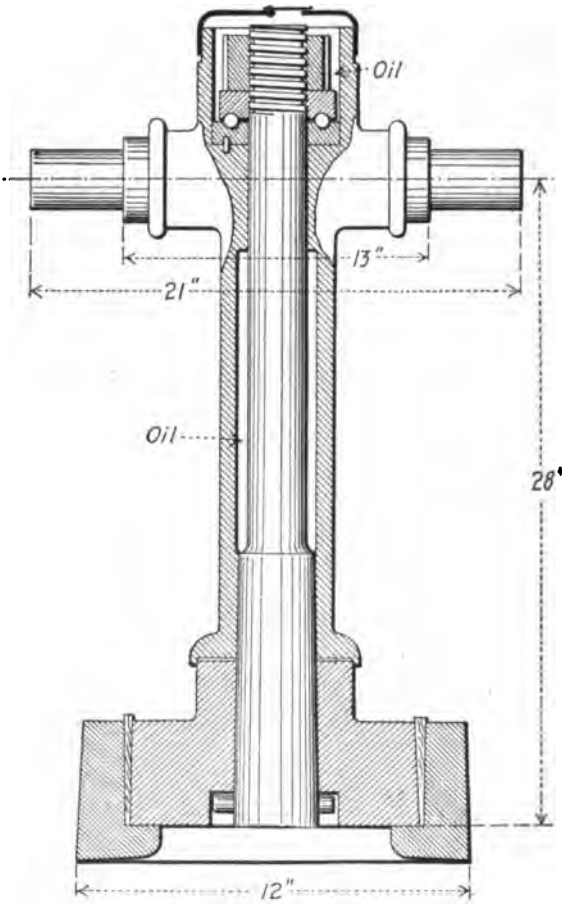

FIG. 196.

196. The point of suspension is at top on balls and at a point more readily accessible than the ordinary arrangement. This device is known as Egger's patent. As compared with the Chilian mill, the time required for single changes of wearing parts is quite small, the dismantling of a Chilian mill being one of the most arduous tasks about the concentrating plant, but the latter will run for long periods without a stoppage, while stoppages with Hunting-

tons are often a frequent daily occurrence. In concentrating mills of any size, it is an excellent plan to have a spare Chilian or Huntington mill to use as a reserve, while another of the battery is being repaired.

Tube Mills.—Tube mills have been finding their way slowly into concentration mills, the principal use to which they have been put to date being the regrinding of table middling, but they are being increasingly used for regrinding jig middling for preparing feed for table concentration. For grinding below 50 mesh, mills of this kind are the only ones available. It is becoming a mooted question as to whether tube mills should be preferred for regrinding jig middling from the range of size of 6 mesh to 10 mesh. The first disadvantage which confronts the metallurgist in the use of tube mills, is a large number of factors, which affect their work. That is, given a certain weight of middling of a certain range of size to be ground in a tube mill to a certain maximum size, the effect of a multitude of interlocking factors must be determined by actual test before the best working conditions can be obtained. The mill must be purchased and installed with only a very rough idea of what its performance is to be. With any given size of mill the degree of fineness attained depends on the rate of feed; the greater the rate of feed the coarser the material will discharge. This is shown in the following analysis of a Hardinge mill regrinding jig middling:

SCREEN ANALYSIS[1]

4-ft. Hardinge mill. Re-grinding jig middlings.

Fall from feed to discharge end 1-1/4 in.

Solids = 35 per cent. = 14.04 tons per 24 hours.

Water = 65 per cent. = 26.07 tons per 24 hours.

Total tonnage, 40.11 tons per 24 hours.

Pebble load, 0.8 tons. Silex lining. Main mill treating 150 tons per 24 hours at the time when samples were taken.

Speed 28 r.p.m.

Mill running two shifts before samples were taken.

Feed		Discharge	
Mesh	Per cent.	Mesh	Per cent.
On 10	66.0	On 10	.....
On 14	16.0	On 14	.....
On 20	9.9	On 20	.....
On 28	4.2	On 28	.....
On 35	.....	On 35	.....
On 48	.....	On 48	4.5
On 65	2.0	On 65	
On 100	1.9	On 100	
On 150	.....	On 150	9.1
On 200	.....	On 200	13.6
Through 200	.....	Through 200	72.8

[1] The Hardinge mill analyses are from work done at the Mary Murphy Mill, Colorado.

SCREEN ANALYSIS

4-ft. Hardinge mill. Regrinding jig middling
Fall from feed to discharge end 1-1/4-in. Speed 28 r.p.m.
Solids = 32.4 per cent. = 34.6 tons per 24 hours.
Water = 67.6 per cent. = 72.0 tons per 24 hours.

Total tonnage, 106.6 tons per 24 hours.
Pebble load, 0.9 tons. Main mill treating 140 tons per 24 hours at the time when samples were taken.

Feed		Discharge	
Mesh	Per cent.	Mesh	Per cent.
On 10	32.6	On 10	3.0
On 14	17.0	On 14	4.2
On 20	14.5	On 20	7.2
On 28	11.6	On 28	10.2
On 35	8.3	On 35	12.1
On 48	4.7	On 48	12.6
On 65	3.1	On 65	11.1
On 100	2.9	On 100	10.7
On 150	2.4	On 150	9.6
On 200	1.1	On 200	7.2
Through 200	1.8	Through 200	12.1

The ore of these two tests was a soft jig-middling and on this account the difference in results is very marked, but it will be noted that in the second analysis the per cent. of solids fed is over twice as great as in the first, and the vast difference in the discharges will be noted. On reducing the rate of feed to 14 tons, the minus 200-mesh product increases to 72.8 per cent.; on the other hand increasing the feed to 34 tons increases the amount of oversize to 49.3 per cent. above 48 mesh. These results are typical of tube-mill work, though with ordinary ores such a great difference would not be encountered. It is impossible to crush to any particular size without any oversize unless a large amount of slime is made. The amount of water in the feed has a great influence on the character of the discharge. The greater the amount of water, other factors being equal, the coarser will be the discharge. The sand-fed tube mills of the Rand require 38 to 39 per cent. moisture, when 400 tons of sand a day are being fed and 27 per cent. when 200 are being fed to obtain the same sizing test of discharge. At the Lucky Tiger mill in Mexico, the feed is 0.75 mm. down and the ratio of water 1 to 1. When the feed is coarser than this, the quantity of minus 200-mesh material diminishes very rapidly. The mills are of the cylindrical type 5 × 14 ft. and have a capacity of 50 tons per day.

SIZING TESTS ON 0.75 MM. MATERIAL, LUCKY TIGER MILL

Mesh	Feed, per cent.
On 100	56.0
On 150	3.2
On 200	2.1
Through 200	38.7

In concentrating mills where the tube mill is used to grind comparatively coarse middling, say from 6 mesh down, and a granular product is desired, a larger proportion of water would probably be used than in the two instances cited (gold mills). But the proper amount of water can only be determined by experiment.

The charge of pebbles will affect the discharge within certain limits, the greater the charge of pebbles the finer the discharge. The effect of increasing or decreasing the amount of pebbles is the same as reducing or increasing the amount of ore fed. The proper charge (in lb.) of pebbles for an ordinary tube mill is given by Davidsen as $44 \times M.$, where M is the cu. ft. contents of the mill.[1] The factors of water and pebble load and speed of rotation and coarseness of feed as affecting the sizing test of the discharge are shown in the following tabulations of tests on a 6 ft. Hardinge mill:

SCREEN TESTS WITH HARDINGE MILL

Mesh	Per cent. weight		Remarks
	Feed	Discharge	
10	43.5	.....	Test No. 1
On 14	15.8	.....	Tonnage: 45 tons, 24 hours;
On 20	15.2	.....	water, 50 per cent.; pebble load
On 28	11.0	7.0	2.2 tons; pitch of mill, 1-1/4 in.;
On 35	7.4	9.2	speed 28 r.p.m.
On 48	4.0	12.5	
On 65	1.8	12.5	
On 100	1.1	12.9	
On 150	0.7	12.9	
On 200	0.3	13.0	
Through 200	1.2	20.0	
On 10	30.0	.....	Test No. 2
On 14	18.0	.....	Tonnage: 56 tons, 24 hours;
On 20	12.5	.....	water, 60 per cent.; pebble load,
On 28	10.0	3.5	2.2 tons; pitch of mill nothing;
On 35	8.8	6.5	speed, 25-1/2 r.p.m.
On 48	6.2	10.0	
On 65	5.0	12.0	
On 100	3.0	15.0	
On 150	1.5	16.0	
On 200	1.2	16.0	
Through 200	3.8	21.0	
On 10	43.0	.....	Test No. 3
On 14	15.0	.....	Tonnage: 60 tons, 24 hours;
On 20	10.6	.....	water, 61 per cent.; pebble load
On 28	7.5	0.3	3.5 tons; pitch of mill nothing;
On 35	6.1	0.7	speed, 35 r.p.m.
On 48	4.3	6.1	
On 65	3.8	10.7	
On 100	3.5	14.3	
On 150	2.2	17.9	
On 200	1.5	17.9	
Through 200	2.5	32.1	

[1] M may be taken as 60% of volume given by length and diameter of mill.

Crushing from 20 mesh down, the capacity of 5-ft. cylindrical mills in tons per 24 hours may be taken as:

Length, ft.	To 80-mesh, tons	To 150-mesh, tons
14	90	50
20	125	70
23	150	80
26	160	90

Crushing from 10 mesh to 40 mesh, the capacity of 5-ft. mills can be taken as:

Length, ft.	Tons per 24 hours
8	60
10	70
12	90
14	100

These capacities will represent average conditions with cylindrical mills and hard ores.

For medium coarse grinding, say from 10 mesh to 40 mesh, the ordinary tube mill is wasteful of power and the metallurgist would do well to investi-

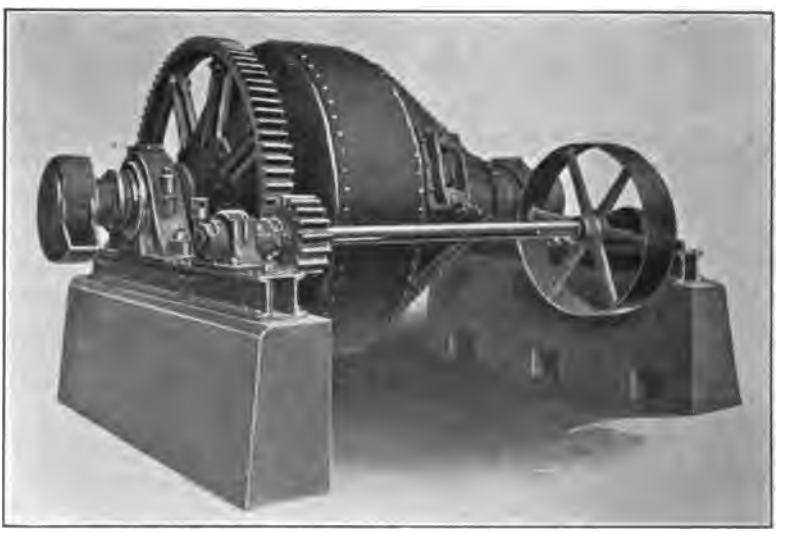

FIG. 197.

gate other comminuting devices. One great advantage possessed by tube mills lies in their simplicity of operation. Beyond the occasional introduction of fresh pebbles and relining at periods from 6 months to 2 years, the machine needs very little attention. The Hardinge mill which is shown in Figs. 197

and 198 has of late years reached large sales for concentration work. In this machine as an inspection of the figures will show, the cylinder of the ordinary tube mill is replaced by two double cones, the larger and more pointed one being at the discharge end of the machine. The effect of the diminishing radius toward the discharge end is to make the pebbles rise to a less height and have less fall toward the discharge end. It would be expected that the

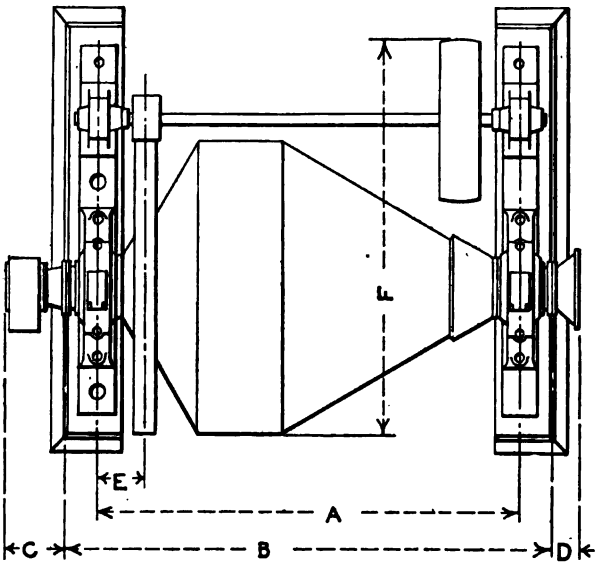

FIG. 198.

Mill		A		B		C	D	E	F		Pebble charge	Horse power
ft.	in.	ft.	in.	ft.	in.	in.	in.	in.	ft.	in.	lbs.	
4-1/2	× 13	6	6	7	5-1/4	11	5	9-1/4	6	1-1/2		
6	× 16	8	5	9	10	16-1/4	6-1/2	13-3/4	8	2-3/8	1500	6-8
6	× 22	8	11	10	4	13-1/4	6-1/2	12-1/2	8	1-3/8	3500	12 15
6	× 48	11	1	12	6	13-1/4	6-1/2	12-1/2	8	2-3/8	4000	15-18
6	× 72	13	1	14	6	16-1/4	6-1/2	13-3/4	10	2-1/4	6000	20-25
*8	× 22	11	3-3/4	12	8-3/4	16-1/4	6-1/2	13-3/4	10	2-1/4	8000	25-30
*8	× 30	11	11-3/4	13	4-3/4	16-1/4	6-1/2	13-3/4	10	2-1/4	10000	35-45

* These mills have 15 in. diam. bearings and cut steel gears, other 6 ft. and 8 ft. mills have 13 in. diam. bearings and cast iron gears.

pieces broken to a desired size shortly after entering the machine, would be less subjected to impact actions tending to repeatedly break them and to grinding actions than in the ordinary tube mill. The converging cone would also increase the velocity of flow as the discharge point was approached, reducing the time sufficiently broken fragments are subjected to further comminuting action. There is also a selective action by which the large pebbles are

kept in the portions of the mill of greatest diameter, the finer pebbles tending to work toward the discharge end of the machine. This action is so marked that the pebbles rise in a ridge from the central portion of the mill, and it is possible while the mill is running to charge pebbles which, when the mill is brought to rest, will roll out at the discharge point. The claims of improvements made by Hardinge seem borne out by actual work. The merits of the Hardinge mill have called attention to the advantages of short cylindrical tube mills for concentration work. It is claimed by the Hardinge Mill Company that short tube mills use more power than a conical mill of equal capacity. It is becoming generally recognized that when a coarse granular product is desired, a short tube mill does better work than the long one and at a greater saving of power. The Hardinge and short tube mill of cylindrical form are better adapted to ordinary milling conditions since they can be made in sizes more suited to the moderate middling tonnages to be found in the average mill. The Hardinge mill or a short cylindrical mill seems eminently suited for coarse grinding.

The influence of diameter and length on the power consumption deserves some consideration, for since the kinetic energy of a falling pebble increases as the diameter of the mill. Mills of large diameter are called for when crushing large particles. The power to rotate the mill would be expected to increase as the square of the diameter. If the particles of the feed are in a sufficient state of division that a light blow would break them, then a more economical effect would be expected with a long mill with comparatively small diameter. In actual practice, however, it is found that that portion of the mill nearest the feed end does the bulk of the work. If desired, therefore, to crush a coarse size very fine, the mill will be found to consume a great amount of power without adequate return in tonnage and fineness of product. In cases of this kind it would seem as though short mills running in series with intervening classification would give the best result.

It is quite common to run tube mills in a closed circuit, the discharge being passed through a classifier and the underflow being returned to the mill. The upbuild and tonnage from this procedure can be calculated from the formulæ given under rolls.

The usual charge for a tube mill is flint pebbles. The best pebbles for this purpose being imported from Europe and cost f.o.b. New York from $8 to $17 per ton. An average grade of pebble costs laid down at Colorado points about $30 per ton. The consumption of pebbles varies from 2 to 15 lb. per ton of ore crushed, but for regrinding and concentration operation the lower figure would be close to the average consumption. To avoid the heavy cost of pebble various substitutes have been tried, such as creek pebbles. At the Mary Murphy mine creek pebbles are used and cost laid down at the mill $7.50 per ton with a consumption of 19 lb. to the ton of ore crushed. Rock fragments have also been tried, but little or no crushing

effect was obtained from them until they have become rounded. Another disadvantage arising from their use lies in planes of easy breakage either due to a natural cleavage or to one induced by blasting. The mineral rhodonite often occurring massive and owing to its great toughness, may offer, where conditions for obtaining it cheaply are favorable, an excellent material for lining and pebbles.

For mill lining chilled cast-iron linings are favored in some localities, in others a natural rough-hewn fine-grain quartz brick called silex is used and various modifications of El Oro lining, in which longitudinal ribs are filled in with pebbles, are employed. Silex linings which are standard last from six months to two years.

Tube mills are commonly of the trunnion type, but machines mounted on friction rollers consume less power. The tube mill in its simplest form is fed through a hollow shaft which is one of the main bearings of the machine. The discharge takes place through a like opening at the other end. This simple mode of feeding has been replaced by scoop feeders doing away with means for preventing leakage where the fixed spout joins the hollow shaft. Some tube mills are provided with a spiral feed which resembles in its elements an Abbe-Frenier sand pump. To facilitate discharge and prevent the pebbles from passing out of a simple opening at the lower end of the machine, a grid plate is inserted at the discharge point. In some mills the discharge is effected by a spiral of the character just mentioned, or devices have been installed at the discharge end which lift or pump the material positively to the central point. One of the advantages of the Hardinge mill is that no special device is needed for promoting rapid discharge.

Direct driving through gearing and by motor has been practiced, but such a mode of driving has not been a great success owing to the heavy shocks to the motor and gearing on starting up the mill, the torque of starting being unusually heavy. It is deemed best to drive the mill by belt through gearing.

The power required for driving tube mills may be reckoned as equal to .004 W where W is the weight of pebbles charged (pounds). This formula gives very close results to actualities both for cylindrical and conical mills. The proper number of revolutions per minute for cylindrical mills is given by the formula 215 over the square root of D, where D is the diameter in inches and the number of revolutions being taken to the nearest even figure. The speed of a mill should be such that the bulk of the pebbles are carried to the highest possible average point in the mill before falling without any pebbles being carried around by centrifugal force.

The underflow from the last screen in the mill, or the overflow from the jig classifiers, or the reground jig middling, if too fine for jig retreatment, will go either to classifiers directly or to dewatering tanks, or a better and modern arrangement, drag classifiers, which would make a separation of sand and slime. The sand will go to a concentrating table and the slime further prepared by dewatering for slime concentration. Drag classifiers can be made

by securing vanes to the periphery of a pulley or wheel resting in a tank of suitable dimensions, or by securing buckets to an inclined belt conveyor which dips into a settling tank receiving the sands and slime to be treated. Where the ratio of water to ore reaching the sands and slimes department exceeds 6 to 1, dewatering should be practiced in order to have the thickened material in the proper condition for classification. The advantage of using mechanical classifiers for separating the sand from the slime, lies chiefly in the more or less entirely perfect removal of the slime which would add a greater burden to the work of the classifier making table gradings. The presence of the slime inevitably causes a muddying of the sand gradings fed

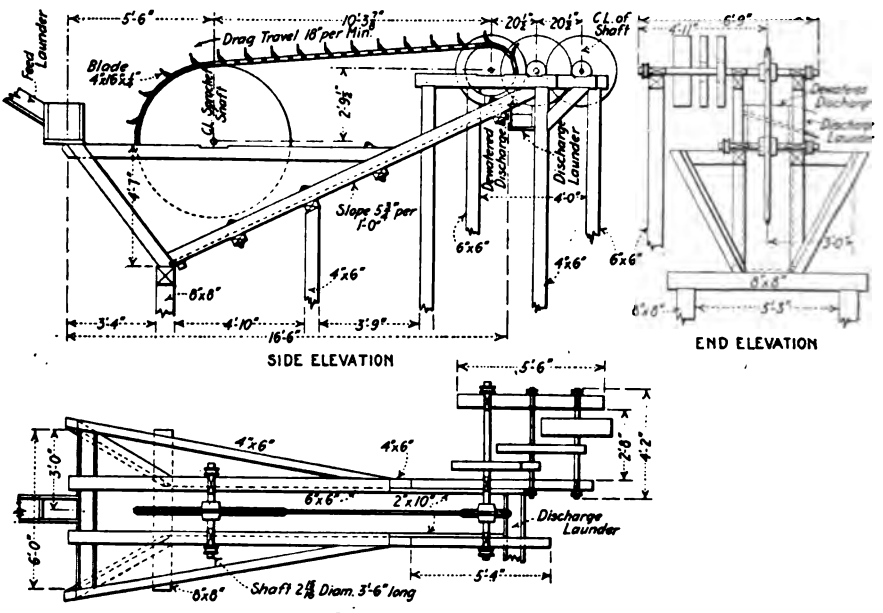

FIG. 199.

to the tables, and results in loss in the slime from these machines or causes an extra expense in gathering and treating it. The large slow moving drag classifiers also take up fluctuations in the rate of feeding and make conditions uniform upon the table floors, so that less labor is required, a larger number of machines being under the care of one man. The principal mechanical classifiers which are used for concentration work are the Federal-Esperanza, the Dorr and Aikens. The first classifier is a belt machine with drag vanes. See Fig. 199.

The capacity of these machines under average conditions of slope is about 0.2 lb. of ore per square inch of drag blade. To obtain the proper width of blade for any desired capacity, find the number of blades which will rise from the tank in a minute, using a spacing of 15 in. where the width of blade

varies from 30 to 40 in., 12 in. where the width of blade varies from 16 to 30 in., the belt travels being from 15 to 30 ft. per minute. This figure divided into the pounds per minute, will give the load per blade per minute, and this result divided by the factor 0.2 will give the area of the drag blade. For the smaller drags the tank will have to be flared at the top to increase the settling capacity. Unless the pulp arriving at the classifier is in the ratio by weight to water of 1 to 6, tanks should be put in ahead of it. The settled material is delivered to the classifier and the overflow treated in the slimes department by a suitable means. The defect of the drag classifier lies in its bringing up slime with the sand to a somewhat greater degree than in other forms such as the Dorr, because the mass is pushed up by the blade and not turned over so as to liberate the slime entrapped by the sand grain. This is not a serious disadvantage in concentration work, for this slime will be liberated to a large extent by proper classification in feeding the sand to the slime machinery. The following figures show the work of the Federal-Esperanza classifier at Esperanza: Capacity of Classifier 275 tons per 24 hours.

SCREEN ANALYSIS OF MATERIAL HANDLED BY DRAG CLASSIFIER

Mesh	Feed, per cent.	Sand, per cent.	Slime, per cent.
40	7.4	15.1	.....
60	9.8	20.2	.....
80	8.3	15.9	.....
100	1.4	2.6	0.5
150	21.4	31.3	5.7
200	1.6	1.9	1.0
Through 200	50.1	13.0	92.8

In other tests at Esperanza the minus 200 mesh sand product has been lower, 8.6, 9.9 per cent., etc. At the Federal mill, Flat River, Southeastern Missouri, the work of the classifier is as is shown in following sizing test.

SCREEN ANALYSIS OF MATERIAL HANDLED BY DRAG CLASSIFIER, SOUTHEASTERN MISSOURI

Mesh	Feed, per cent.	Sand, per cent.	Slime, per cent.
Plus 3/4 mm.	4.4	9.1	.....
Plus 70 mm.	23.5	33.5	.....
Plus 150 mm.	8.1	16.0	0.4
Sand 150 mesh	31.7	35.5	31.6
Slime 150 mesh	32.3	5.9	68.0

Classification proper follows preparation for this operation in the ways which have been already described. Hindered settling classifiers are more generally preferred for preparing table feeds for reasons which apply to all concentrating machines which are given a stratifying shake. The principal requirement for obtaining hindered settlings is to have a loose bed of grains in a sorting column, and one way of doing this would be to use a pulsating jig. In the Richard's pulsating classifier the pulsations are obtained by a

rotating valve connected with a supply of water under head. Hindered settling can also be obtained by restricting the discharge opening for sands as is done in the Anaconda classifier. In all hindered settling classifiers the launder area must be kept separate from the sorting area and as distinguished from the free settling classifier where the feed flows through the device, both settling and transporting spaces being the same. I am convinced that once the conditions are obtained for maintaining a crowded column of grains of sufficient depth, hindered settling in great perfection will be obtained regardless of the mode in which the rising current of water is introduced from the very description of such a column. The rising water is forced to follow the interstitial passages, and there is no chance for disturbing eddying

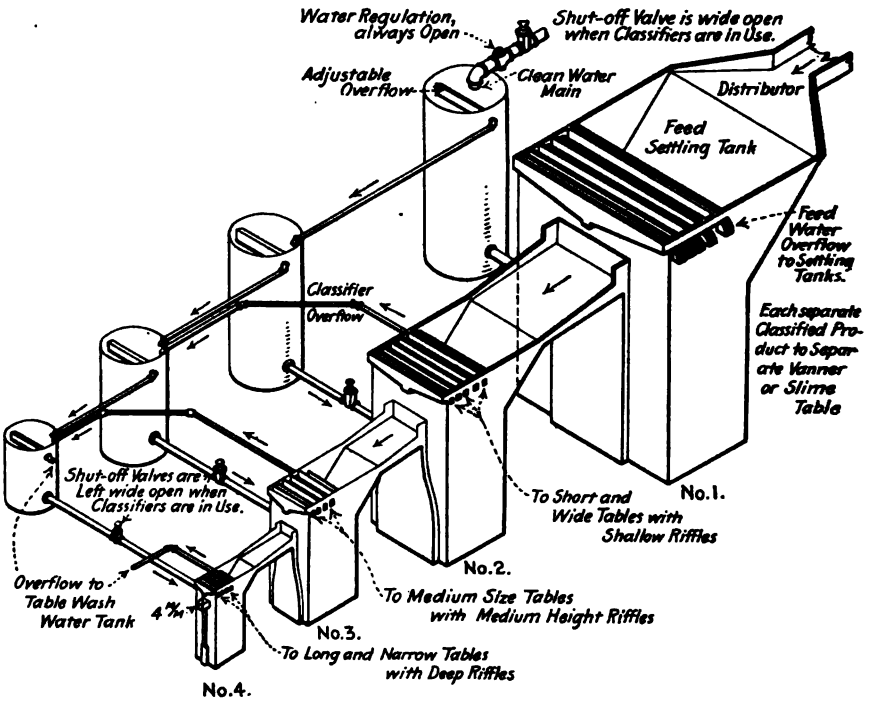

FIG. 200.

currents to be set up or carrying slime into the sand discharges. The reported results of the Anaconda classifier, and my own experience with the Richards so-called vortex free settling classifier in its early form, furnish proof for this statement. As first made the vortex chamber was enclosed at the bottom and sand would pass through the tangential hole leading from the vortex chamber into the sorting column until finally only a few of these holes near the point where the water entered were open. The vortex around the rest was filled solidly with sand. When this occurred, and it was impossible to tell when it did occur without taking the classifier to

pieces, there was no difference in the work of the classifier. It has been my experience that when good classification is obtained, it is of the hindered settling character. In the Richards-Janney classifier a hindered settling

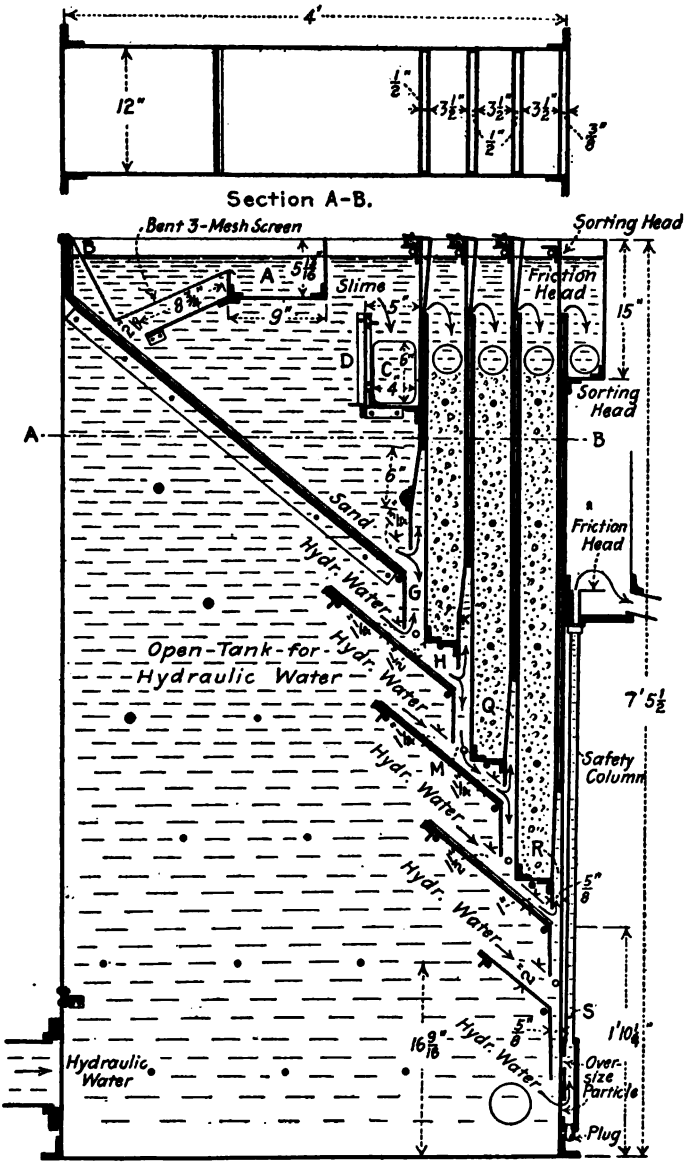

FIG. 201.

column is maintained by an intermittent-discharge mechanism and a whirl of the rising water is maintained by a mechanical stirring device. The

whirling rising water is supposed to have the effect of causing a positive upward advance; rotation of any plane in a direction at right angles to the axis of the column in such advance being prevented by gyroscopic forces.

In the Overstrom classification system the ore is fed into a system of classifying tanks, the proper dimensioning of which may be gauged from the description of practice at the mill of the St. Louis Smelting and Refining Company, Southeastern Missouri.[1] No. 1 tank is 15 ft. high, 2 ft. 6 in. wide; No. 2, 13 ft. high and 2 ft. wide; No. 3, 7 ft. 6 in. high and 12 in. wide. At this mill everything under 3 mm. is classified. The main features of the Overstrom classifying system are: the slime is removed at the head of the

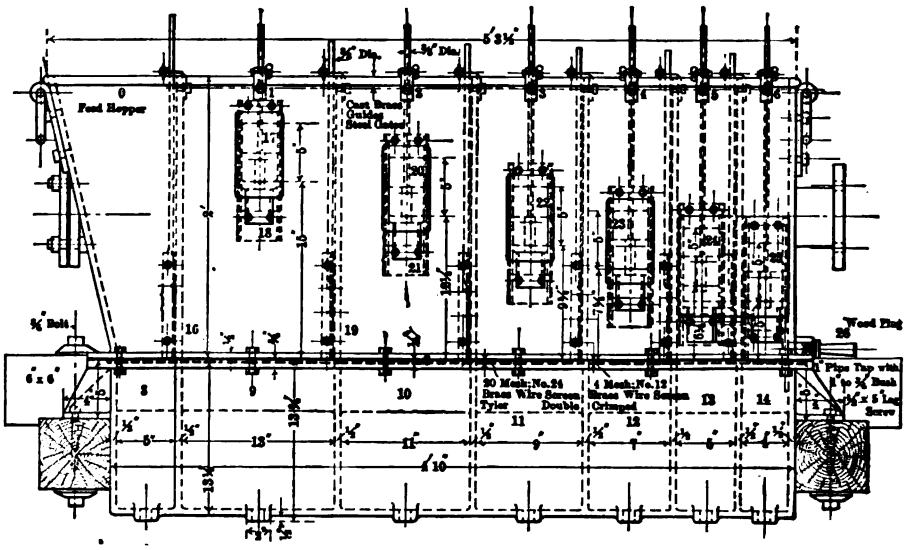

FIG. 202.

classifier and the other products made successively increase in coarseness to the point where the device overflows. The same mode of classification is found in the undercurrent Richards pulsating classifier and has the advantage in that the elimination of slime from the sand sizes is more perfectly and readily effected than where the reverse mode of classification is employed. A second feature of this device lies in the use of the water entering with the pulp to perform the classification and this will readily be understood by reference to the diagram showing water arrangements, Fig. 200. Fig. 201 shows a section of the classifier *G*, *H*, *Q*, *R*, and *S* are the sorting columns, *S* being a safety column under greater head than the others. The capacity of the classifying system at the St. Louis mill was over 600 tons per 24 hours for the single set of tanks, the dimensions of which have already been given.

The Richards pulsator classifiers are practically Richards pulsator jigs,

[1] *Eng. and Min. Jour.*, July 12, 1913.

the undercurrent type delivers the slime from the first compartment and successively coarser sizes from the others. See Figs. 202 and 203. Richards has also invented a hindered settling classifier of the type shown in Fig. 204. The individual classification column of this type and the pulsator type

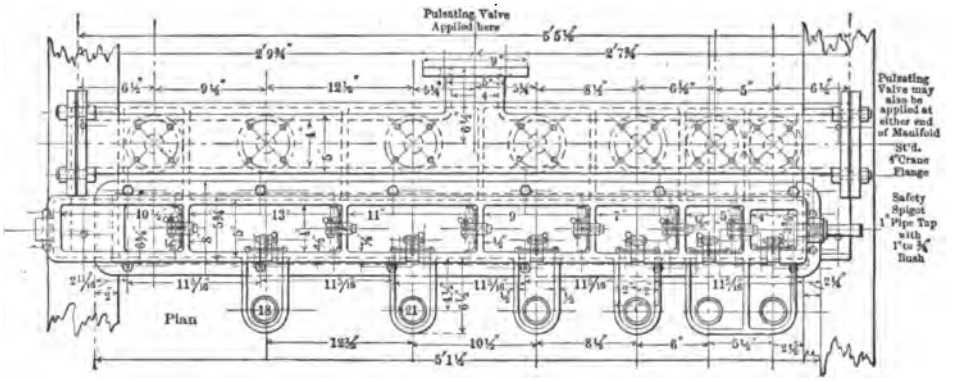

FIG. 203.

are made separate so that they can be applied at convenient points to a long launder. This makes a convenient mode of arrangement where a long line of table is to be fed by classifiers as it shortens the machine launders and gives greater radius for the distribution of feed.

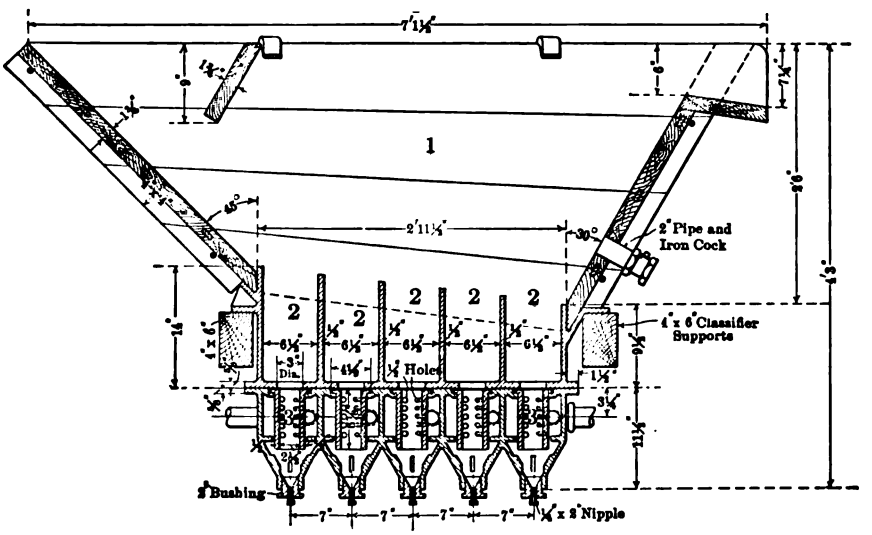

FIG. 204.

Where there is a large installation to be made, the launder arrangement can best be made parallel for the main and secondary classification arising from the direct and the reground middling streams. If the sand machines

are arranged in double or triple banks, the streams flowing from individual classifiers when of the launder type, can be split into two or three substreams and laundered to two or three machines set on a line at right angles to the main classifier launder. This may be done by having a series of slots in the launder either crosswise or preferably lengthwise, such slots increasing in size from the point nearest to the classifier to the last machine receiving feed; or the single plug may be laundered radially to two or more machines. A single bank of machines for the main stream and a parallel single bank for the middling stream makes a good arrangement for a small mill. For a large mill this arrangement would necessitate a wing of too great length. The best arrangement for a large mill is in double or triple banks or any desired number of banks.

The capacities of a hindered settling classifier with various sized pipe columns are as follows: 2-in. 45 tons per 24 hours; 3-in. 100 tons; 4-in. 175 tons.. The sorting columns should be of the same size and have a depth of at least three times the diameter of the column. The rising water required will vary from 2 to 6 gal. per minute per column. The rising water for a four-plug single classifier may be estimated at 15 gal. per minute. The metallurgist should select the simplest form of classifier obtainable, using preferably the launder type, for medium and large mills. The launder type has one disadvantage in that the flowing stream between pockets acquires much momentum and it is difficult to check. The launder should be deepened at the pocket and partake of the form shown in Fig. 205 and should have the following dimensions:

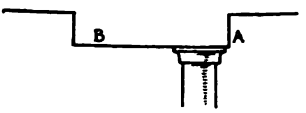

FIG. 205.

(A) DIMENSIONS OF LAUNDER CLASSIFIER

Plug	2-in. col., inches	3-in. col., inches	4-in. col., inches
No. 1	3	4-1/2	5-1/4
No. 2	3-1/4	5	6
No. 3	3-1/4	5	6
No. 4	4	5-1/2	6-1/2
No. 5	5	5-3/4	7
No. 6	6	6-3/4	8-1/2

Dimension B will be 6 in. for 2-in. column; 8 in. for a 3-in. column; and 9 in. for a 4-in. column for any number of plugs.

If head room permits, the feed to the successive sorting columns may be introduced inside of cylinders placed over the sorting column. The material failing to pass down overflowing between the inner feed cylinder and the periphery of the sorting column which should be made circular to correspond with the feed cylinder and with tapering cone below to the point where it joins the sorting column proper. The outer circle of the classifier is

provided with an overflow launder leading to the feeding cylinder of the sorting column next below.

Long V-tank classifiers have been much used in the past for providing classified feeds for sand and slime separating machinery, but with improved means for dewatering and better classification devices, these tanks are finding much less use than they did formerly. Their demerits are discussed in *Eng. and Min. Jour*, March 5, 1910.

Sand Concentration (Wilfley Tables).—Water concentration of sand sizes is today practically confined to tables of the Wilfley type, or as Wilfley's competitors term them, tables of the Rittinger type. The original patent was granted Wilfley in 1895. The invention came just before the time of a great need for a machine, which in the sand sizes would separate galena and blende from one another and from the gangue. This need is well stated in the following extract from the Canadian Zinc Commission's report.

"In the summer of 1899 certain smelters in Kansas received small shipments of blende concentrates from Creede, Colorado. The real development of the zinc industry in the Rocky Mountain region may be dated from this time . . . the invention of the Wilfley table in 1895 (affording a greatly improved means for cleaning fine ore) . . . led to the erection of the type of mill more especially suited to the particular ore, and although these were designed for the production of galena concentrates, it was found that a fair grade of zinc could be made at the same time as a by-product. The advent of an enterprising broker acquainted with the needs of European zinc smelters developed an export business which in 1900 and in two or three years subsequent attained large proportions . . . The smelters of Kansas continued their experiments on the smelting of Colorado ores, with many discouraging experiences, but after a few years they succeeded in treating them profitably and drove the European buyers out of the Colorado market."

While the Wilfley table came at a time to fill a great need, it would have and did make its way in mills where only one mineral separation was required, for as will be imagined, a machine that would make two or more mineral separations would also make a very sharp and clean single mineral separation free from penalized impurities or diluting impurities. Further points in its favor were that a glance sufficed to see that the machines were functioning properly since there were no hidden actions going on as there were in other types of separating machine. The machine was also susceptible to considerable variation in feeding without requiring changes in adjustment, and the adjustments necessary were simply and easily effected. The general construction of the machine was simple and the cost for operating labor and maintenance small.

The essential elements of the machine were known to the art of concentration at a very early period except the Wifley mode of riffling and its combination with a plain cleaning surface. Rittinger's table had the elements of stratification and forward advance of material by the same mechanical means which performed the stratification. Rittinger's table was also capable of being tilted transversely to the line of washing, resulting in the particles

taking a diagonal path just as they do on the Wilfley table or tables of a similar make. The Rittinger table was not provided with riffling of any kind. Rittinger's table did not have sufficient length and comparative breadth to effect clean-cut separation, and a mere change in the dimensions which Wilfley made in this type of table were an important though not patentable advance in the art of concentration. It will be shown a little later that practically the whole separation which takes place on the deck of a shaking table, is effected shortly after the feed arrives on the deck, owing to the shaking motion producing the stratification, the nature of which will be described later, and the ensuing operations of the table are to the end of spreading the layered arrangement, the transverse slope and sidewash of wash water being essential to effecting this spreading. Since the heavier minerals gravitate to points nearer the deck, they are less under the influence of the sidewash, and as a result the sands are shifted laterally in respect to the concentrate

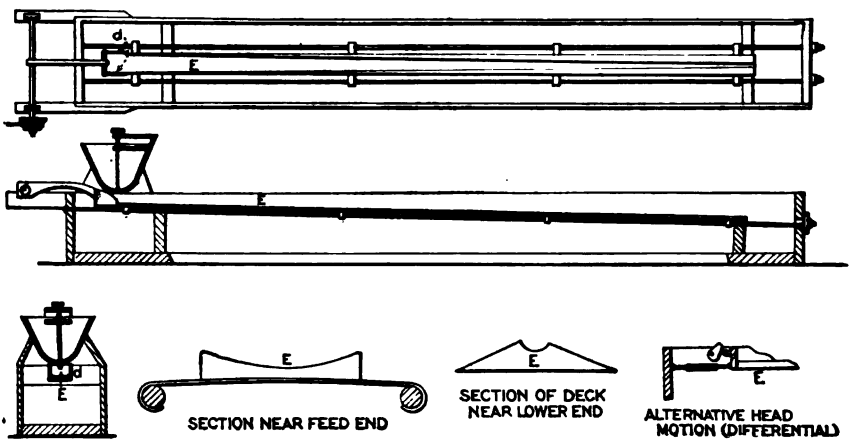

FIG. 206.

and with the progressive motion of the table the sand arrives at one portion of the end of the table and the concentrate at another position.

This description of the mode of separation would apply either to a table without riffles, such as the Rittinger, or a modern riffle table.

Before taking up in detail the modifications of this action caused by riffling it would be well to discuss the position of the art of concentration before the advent of the Wilfley table. Stratification, the most important single action of concentrating tables, goes back to the simplest forms of hand apparatus such as the gold pan. Rittinger's table made its advent about 1853. The tapering riffle in a perfect and pure state in combination with stratification and shaking advance, seems to have been invented about 1862 by Victor Baron, a patent having been granted to him in that year by the United States Patent Office. The details of his machine are shown in Fig. 206. The table is inclined toward the discharge end if the shake is not differential, but if the

shake is differential the deck can be horizontal or inclined upward. As shown in the illustrations, progression is given by a cam. The ores are fed on near the cam motion at point *d*, Fig. 206, and the deck is a long concaved surface. This curved surface diminishes in width and depth (the patent application specifically mentions the decrease in depth) toward the lower or concentrate discharge end. As will readily be imagined, the shallowing of the riffle causes the sand to be crowded out and over its sides, and at the discharge end there remains but a pure concentrate, exactly the action obtaining on a single tapering riffle of a shaking table equipped with a plurality of tapering riffles.

Stratifying sand-concentration machines have followed two well-defined lines of development, the essential difference between the two kinds being illustrated by the vanner and the riffled table. On the vanner the general direction of progression of the ore fed and the direction in which the sand moves away from the concentrate under cleaning actions are parallel but opposite in direction to one another. In tables of the Rittinger type the sand moves away from

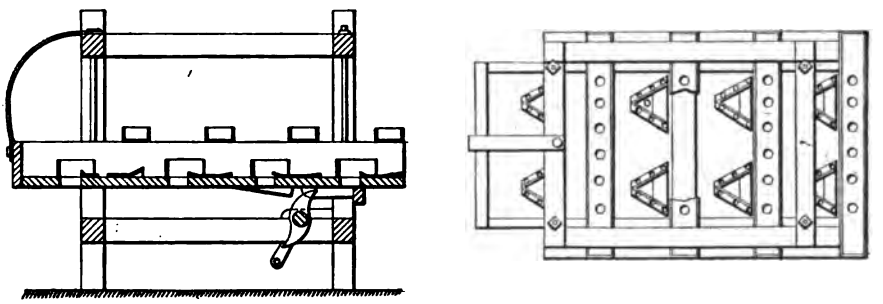

FIG. 207.

the concentrate in lines at right angles to it. In the United States as early as 1867 Stiles invented a shaking machine in which the ore fed at one end of the deck was advanced by a movement imparting a progressive and stratifying shake. The ore advanced parallel to the long axis of the deck over riffles at right angles to this line. At the upper or discharge end a water box was provided for washing back the sand which was caught in slots cut in the deck, the concentrates in their forward travel being prevented from falling into these slots by V-shaped guards placed below them and which deflected the general advance of concentrates causing them to pass around the opening. See Fig. 207. Numerous other American patents are on record in which with some change of detail forward advance is effected by shaking movements, the sand being washed back along lines parallel to the advance of ore fed, but these patents never reached the commercial state and they represent little or no advance over the patent of Stiles.

Vanner.—The vanner employs principles similar to those found in Stiles' patent, but general advance of material fed is secured by an advancing endless

belt and stratification is effected by shaking the whole belt and frame at right angles to the direction of advance of the feed, or on some vanners by an endwise shake. From the point of mechanical simplicity the vanner is inferior to the Stiles patent, for in the latter the general advance of feed in the stratification is effected by the same mechanical means, that is, a differential movement, whereas in the vanner these two elements are distinct from one another. I admit that the advance of feed effected by a uniformly moving belt has no tendency to disturb any fine concentrate which is clinging to the belt, were there not the additional element of shake introduced. With differential advance also capacity and stratification are correlated, that is, if the stroke is cut down to a degree sufficient to effect stratification when treating a very finely divided feed, and yet not to a degree to put the fine concentrate in suspension, the advance would be reduced to a point which would materially cut down capacity. In practice the ability to nicely correlate the length of stroke within a desired upward travel of material is seldom taken advantage of, indeed with some form of vanners the length of stroke cannot be changed at all. Some practical work, however, done by Dr. Gahl would seem to indicate that the length of stroke is not a material matter in the adjustments of the vanner. If this is the case, it is difficult to conceive what advantage is gained by separating stratification and forward advance. The vanner shaking action is not as good a stratifying one as furnished by the differential motion to a deck with riffles parallel to the line of the differential movement, for it does not spread out and keep the sand of uniform depth and looseness. If a concentrating machine were built following the general line of the Stiles' patent, but arranged with feed and water box close to one another as they are on the vanner, the differential movement would tend to advance water, sand and concentrate far more sharply up against the washing-back effect of the cleaning water. More cleaning water would have to be used than on the vanner, since in this machine the only force tending to advance the top grains of the bed is their friction hold on the lower layers and this is readily overcome by the wash water.

Rittinger and Wilfley Tables.—Developments along the Rittinger line do not show maturity until the appearance of the Wilfley table. In the United States as early as 1882, Blatchly and Kustel (U. S. Patent 258179, June 6, 1882), showed a shaking table having a riffled and a plain portion. The riffles were of equal length and their ends terminated on a line which was at right angles to the line of shaking motion. Lampert a little earlier than Wilfley invented a shaking table which was entirely covered with riffles. In a narrow sense the Wilfley table consists of a series of riffles secured parallel to the line of head motion of a shaking deck table, the riffles terminating on a line diagonal to that of the head motion, this element being in combination with a plain or unriffled portion below. It seems difficult to conceive of the Wilfley table without the element of the cleaning surface, or to regard the so-called successively advancing terminals of the riffles as constituting the

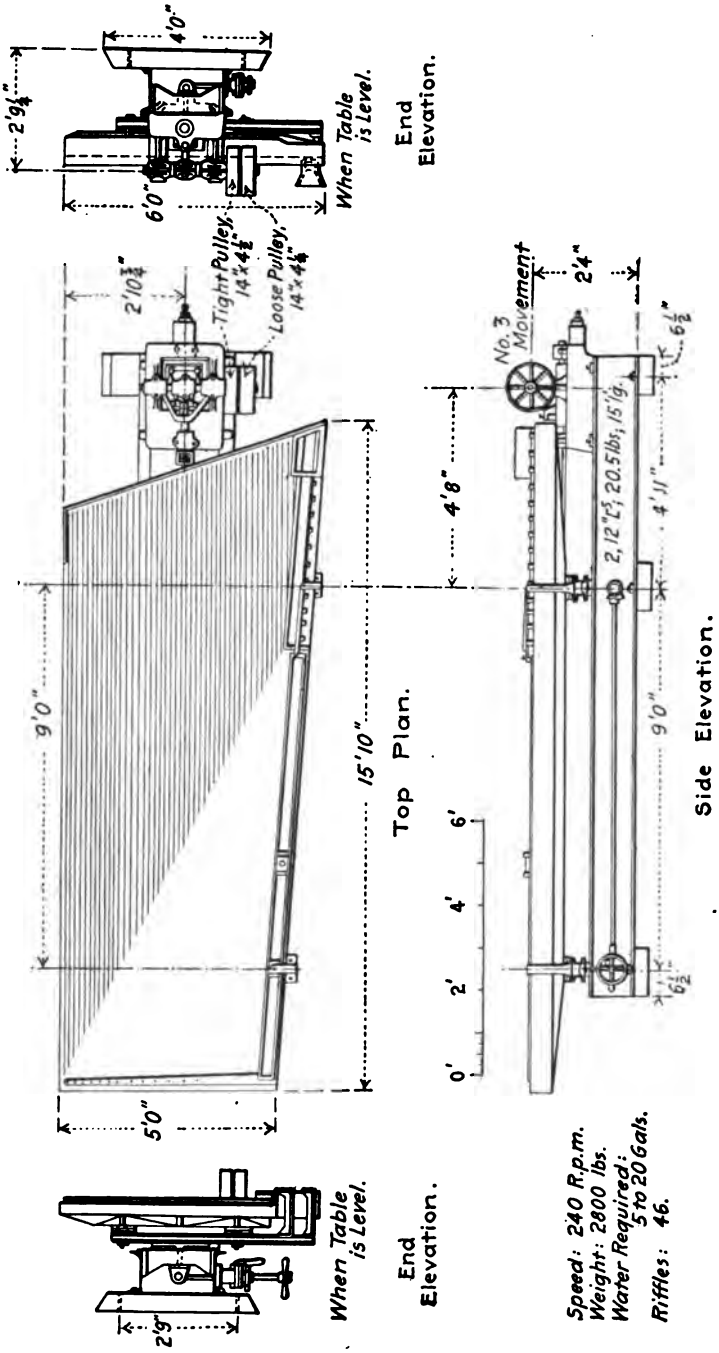
4'0"
2'9¼"
6'0"
When Table is Level.
End Elevation.
Tight Pulley, 14"×4½"
Loose Pulley, 14"×4¼"
2'10¾"
9'0"
15'10"
5'0"
Top Plan.
No. 3 Movement
2'4"
6½"
4'8"
2, 12" [s; 20.5 lbs; 15' lg.
4'11"
9'0"
6½"
0' 2' 4' 6'
Side Elevation.
2'9"
When Table is Level.
End Elevation.
Speed: 240 R.p.m.
Weight: 2800 lbs.
Water Required: 5 to 20 Gals.
Riffles: 46.

FIG. 208.

patent itself without the additional combination of the cleaning surface if a narrow construction be put upon the patent and in truth without the addition of such cleaning surface, the work of the table would be inferior. Lampert's table could be arranged so as to be of a rhomboidal shape by lengthening the deck illustrated in his patent and cutting off a corner opposite the feed corner and one diagonally opposite to this at the concentrate end, and thus making all the riffles of the same length, but having at the lower end successively advancing terminals. Looked at in a broad sense, the termination of the riffles on a line diagonal to the head-motion line, was a great improvement in the art, but to obtain a broad construction the language of the patent cannot be followed, as this merely called for riffles of increasing length. The improved work performed by modern riffle tables is largely due to arrangement of riffles of equal length and height in the manner shown on the drawings

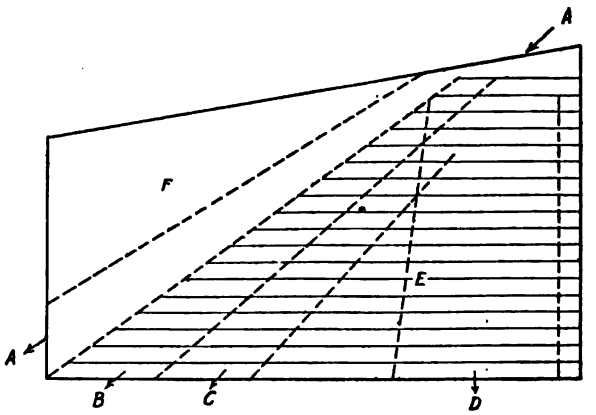

FIG. 209.

of the Wilfley patent, or arranging a plurality of tapering riffles in such a way that lines drawn across the tops of the riffles where they are of equal height, would be diagonal lines.

The changes in the Wilfley table since its appearance in 1895 have been mostly changes in detail of the under body. The general arrangement of riffling and the mode of feeding remains practically the same in the earliest and latest models. In the No. 1 table the feed box is stationary, but in the second model it was arranged to shake with the table, because it was found that the stationary box filled up very quickly with slime. The general arrangements of the latest or No. 6 model of the machine are shown in Fig. 208. Feed is brought into the feed box and spilled on to the deck through slotted openings in the rear. Shortly after the table is in operation, the ore on the deck, if it be of a simple or one-mineral character, takes arrangement[1] shown in Fig. 209. There is usually more or less slimy water which

[1] *Trans.* A.I.M.E., XXXVIII, Richards, "The Wilfley Table."

comes directly across the table from the feed box *A* and discharges in a band *D*, then a wedge-shaped band *C* separated from the slimy water by a more or less dry triangle and consisting of a more or less clean band of sand or tailing, depending on the degree of unlocking to which the feed of the table had been subjected. If the unlocking be imperfect, the band will be increasingly contaminated with inclusive grains going in the direction of *B*. Band *B* is a band of middlings or included grains of some gangue mineral of greater specific gravity than quartz. The final band *A* is concentrate. Where there are two or more heavy minerals they will arrange themselves in wedge-shaped bands in the region occupied by the band *A*, the heaviest mineral being nearest the water and feed side of the machine, and the

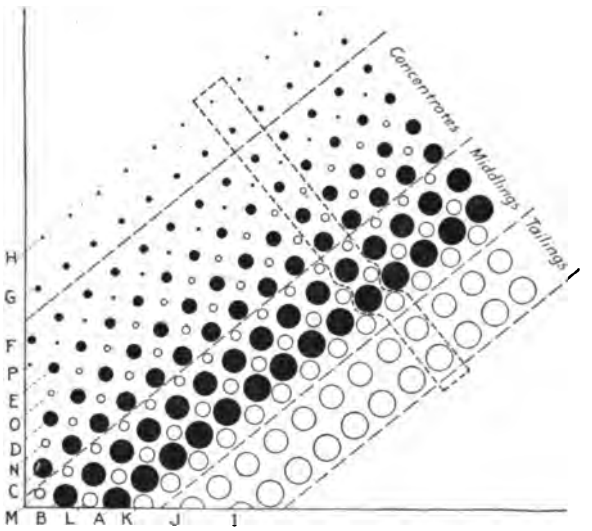

FIG. 210.

others arranging themselves according to specific gravity toward the tail or discharge side. The individual bands have the smallest grain at the edge nearest the water or feed-box side, and the pieces become successively coarser across the table to the other boundary. There is much overlap of the wedge-shaped bands, the coarse pieces of the different bands being mixed with the fine pieces of the bands of next less specific gravity. This is illustrated in Fig. 210, showing diagrammatically the typical appearance at the discharge corner of a Wilfley table which has been fed with a mixture of pure galena and quartz ranging in size from the largest shown in the diagram down to zero.

In order to have the clue to the arrangements of the grains, *stratification* must be explained and defined. The term is a misnomer, for there is no actual arrangement of distinct layers. The ordinary conception of stratification is that there is an arrangement of distinct layers in the riffles, the

lowest layer being the mineral of greatest specific gravity followed successively by others above of diminishing specific gravity. Actually the arrangement of grains in the riffle is as shown diagrammatically in Fig. 211,[1] which would represent the typical arrangement of whole feed below a certain maximum size in a riffle adjacent to the feed and water side of the machine. The grains take this typical arrangement almost immediately after arriving on the deck, but the riffles have theoretically little or no effect in causing it. They do aid in holding the water and keeping the mass mobile and of even depth, so that the arrangement is obtained quickly and perfectly at all points in the vicinity of the feed box. If unsized material, say of three minerals (quartz, blende and galena), be placed in a jig compartment and be given a few strokes

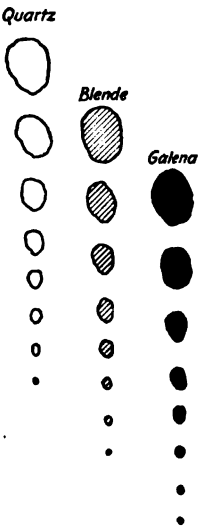

FIG. 211.

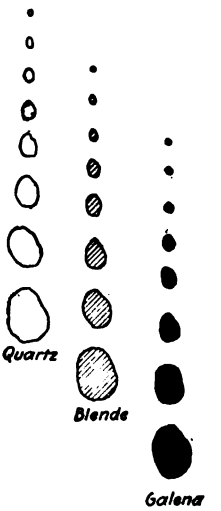

FIG. 212.

of the plunger, the general arrangement the grains will take will be shown as in Fig. 212. It will be understood that the grains will all be mixed together in a bed, but at any point the three columns will represent diagrammatically the sizes of the different constituents. If the diagram be rotated so as to bring the large grains to the top, and if the titles quartz and galena be substituted for one another, the same arrangement will be obtained as is shown in Fig. 211. Hindered settling puts the largest and heaviest grain at the bottom of a bed and the arrangement of the others depends upon the combined factor of size and specific gravity. Stratification on the other hand puts the smallest heaviest grain at the bottom of the bed, and the arrangement of the other grain depends upon the combined factors of reciprocal size and specific gravity. Stratification is due to a combination of residual gravitational action and the variation of the freedom of movement or amount

[1] The portion of Fig. 210 enclosed by dotted lines should also be noted.

which the grains separate under the shaking of the table, and which varies from a maximum at the top of the bed to zero at the table surface, or very nearly zero. The effect of the varying freedom of movement is shown in Fig. 213. If *AB* represents the amount of separation in the grains at the top of the bed of ore on a table with little or no movement at the bottom *O*, then the grain *G* can only settle in the bed to the point *CD*. Of two grains of the diameter of *G*, the heavier will get below the lighter owing to the residual gravitational action. A small grain could go down through to the deck, or very nearly to the deck and would displace a lighter one at that point. The rate of subsidence in the interstitial spaces increases very rapidly with diminishment of size of heavy grains, increase in size of gangue grain, and increase in specific gravity of heavy mineral. It is impossible to make a clean stratification of equal-size particles of different specific gravity by a shaking motion alone. The separation which is effected with equal-size material may be described as a tendency for the heavy mineral to arrange itself below the light. I have never performed any shaking experiments with beds of the shallow depth of the riffles found on concentrating tables, or with sand feeds, but I have performed some experiments with a glass-side box sliding on a track and shaken back and forth by an eccentric. Various combinations of sizes of material and depths of bed with quartz, galena and iron pyrites, ranging in size from 1/2 in. pieces down to 200 mesh, and depths of bed from 1/2 in. to 5 in., and with varying lengths of stroke and rotations of the eccentric were tried. Equal sized particles of gangue and mineral showed very inferior separation. Where there were equal volumes of say quartz and galena of equal size, the latter was nearly covered up after prolonged shaking by a single top layer of gangue. In some experiments with 1/2-in. quartz and galena the layer of quartz was spread with a layer of 20-mesh galena above it, each layer being about an inch thick. Four seconds were required to obtain all the galena below the quartz. With 80-mesh galena other conditions remaining the same, the time required for separation was too short to be caught by a stop watch. The shaking box always started at full speed.

FIG. 213.

The arrangement of products in wedge-shaped bands on a concentrating table will be understood with little further explanation. After a whole feed is stratified on a table, the large top quartz grains are the first to begin a transverse course across the table, but under the influence of the head motion and to a lesser extent the deflection caused by the riffles, they follow a diagonal course and take up positions on the upper side of band *C*. They are followed by smaller quartz grains which take up other positions below the first, then by large middling grain, which leave the riffles and accompany small quartz grains.

Finally from the elimination of the large quartz and middling grains and constant accessions of feed and a moving forward of the remaining material

in the riffles, the first of the concentrate grains, being those of the largest size, leave the riffles and taking a diagonal course down the table arrive at the lower point of band *B* intermixed with the lighter middling grains. The final grains to leave the riffles are the very finest and heaviest concentrate which take up the position nearest to the water box. Much of the fine concentrate takes a course directly along the riffles nearest to the feed box, the rest of the concentrate emerging from the ends of the other riffles unless the table is highly tilted, when a portion of it may discharge over the tailing side of the machine.[1]

It will now be understood why hindered settling is a requisite for good table work. Suppose a mixture of quartz and galena be tabled, then referring to Fig. 210, grains J and I may pictorially represent the points on the table at which quartz grains from the hindered settling feed leave it, and C and D similar points for galena grains. Or, in other words, the classification would tend to do away with the overlap or contamination of products. This has been experimentally proven by Richards (*Trans.* A.I.M.E., XXXXVIII). Sized feed for tables, in addition to greater expense in obtaining it does not make good table feed, owing to the poor stratification.

The standard arrangement of riffling on the Wilfley table consists of 46 riffles ranging in length from 156 in. to 54 in. The longest riffle is $\frac{3}{8}$ in. deep at the motion end and tapers to zero. The shorter riffle is $\frac{1}{4}$ in. at the motion end and also tapers to zero. In the original patent the riffles were shown as of equal depth but of increasing length, and this arrangement in combination with a cleaning plane gives excellent results. If all of the table is riffled, then tapering riffles must be employed, the shallowest one being at the feed side and the riffles rising in height toward the tailing discharge side. A deck completely riffled but with riffles throughout of equal height would give a separation, but the concentrate would be much contaminated with sand. A plain surface or lightly riffled surface seems necessary to effect the final cleaning of the concentrate.

Practically all shaking tables are linoleum covered. This material owing to its linseed oil bond has an attractive force, and sulphides cling to it with remarkable tenacity. The cleaning-up action in the plain portion of the Wilfley table takes place under the following conditions: On a plane surface where the mixture of grains is under the influence of a film of water flowing over them, the larger grains of mineral of the same kind will move faster than the smaller. Of two grains of different specific gravity the lighter will move the faster. This is certainly true of two grains of the same size and within a certain range of decrease of size of the lighter grain, it will still continue to move faster than the larger heavier one. On a Wilfley cleaning surface, the result of these actions is to wash the larger concentrate grains to a position nearer the tailing-discharge side of the machine than would obtain

[1] The wedge shape of the bands is caused largely by actions explained under the McKesson-Rice Screenless Sizer, Chap. IX.

without such washing-up action. The effect of the washing-up action on the quartz is much more marked, and the bulk of these grains in the cleaning plane are eliminated by way of the tailings launder but carry with them an inconsequential amount of concentrate grains.

The principal American concentrating tables are the Wilfley, Card and Deister. The general appearance of the Deister table is shown in Fig. 214. On the Card table the riffles are replaced by grooves cut in the linoleum and which increases in depth and width across the table, and from motion to concentrate end each riffle is first shallow, then swells to the largest section in the central portion of the table, then diminishes again in section toward

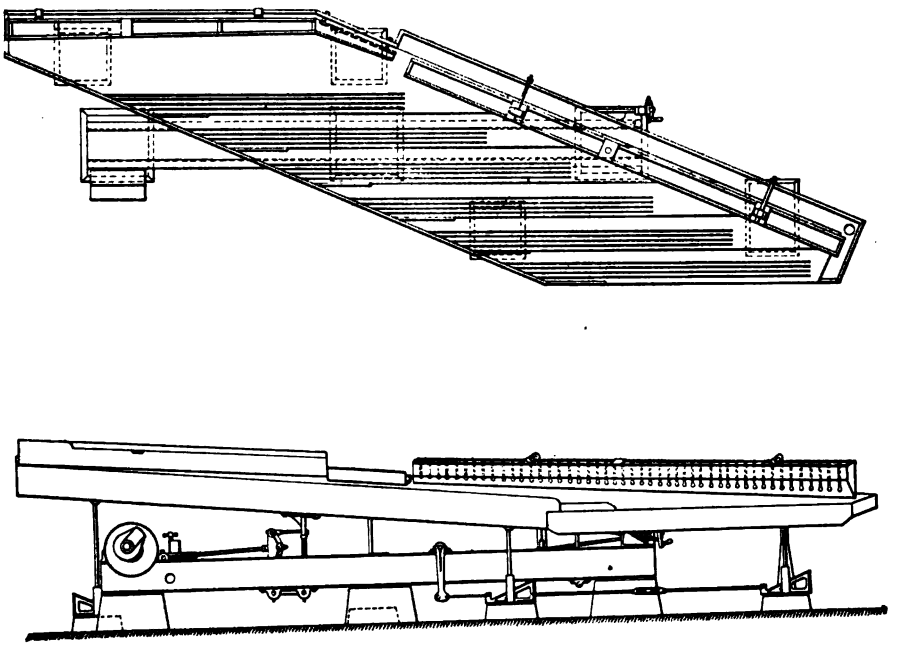

FIG. 214.

the concentrate-discharge end. The Deister table is rhomboidal in shape. Fig. 215 shows the arrangement and height of riffles on the No. 2 machine and Fig. 216 on the No. 4 machine.

All of these machines have been improved from year to year to the end of greater mechanical simplicity and durability. The earlier Wilfley table had rectangular base frames of framed timbers, these giving away in later models to a single large central stick in No. 5, and in the No. 6 to two parallel steel channels. Parallel steel channels closely placed together are also used on the Deister and Card tables. The No. 1 model of the Wilfley had loosely mounted rollers attached to the tilting frame to support the deck, and with wearing plates secured to the shaking deck. Fig. 217 shows the construc-

tion of these rollers. It was expected that these rollers would rotate slowly and remain circular under wear, but they wore flat and were abandoned for

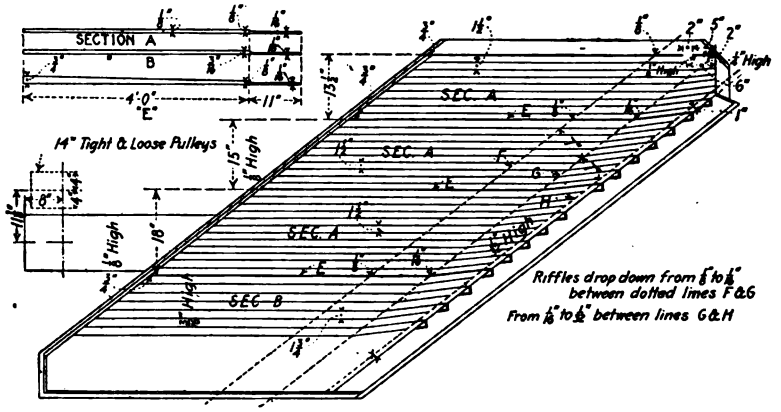

FIG. 215.

various forms of rockers. In the No. 6 Wilfley table rocker legs have been replaced by what is called a slipper bearing described as follows:

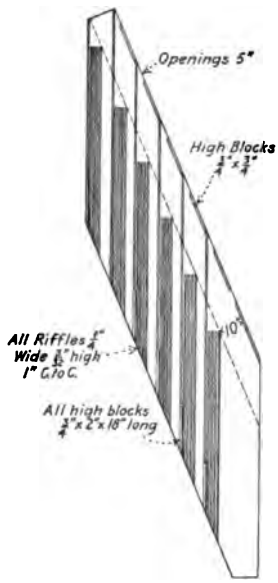

FIG. 216.

"The table rests upon four slippers bolted into the cross channels subject as to alignment and as to height. These bearings are of the engine cross-head slipper type. The surface of the lower half is concave and submerged in oil. See Figs. 218 and 219. Fig. 218 also shows in detail the means for adjusting the transverse slope."

The original Card table was mounted with four U-shaped lugs rigidly secured to the deck, and these slide on two longitudinal round rods or shafts, one on each side of the table. In the latest model of Card table the deck is supported upon steel blades of which there are three sets, these blades being hung from a central longitudinal shaft resting in bearings on the base-frame channel. The whole table can be rotated about the shaft. This arrangement and the means for altering the slope of the table will be clear by referring to Fig. 220. On the old James Sand table now obsolete, the table rests upon a number of steel balls, there being a ball at each supporting point fitting into two similar parallel V-section ball races, one for the table and one for the tilting frame. The balls wore flat the same reason as did the device in Fig. 217. Possibly an arrangement of this sort could be satisfactorily replaced by a ball-bearing

FIG. 217.

caster in which one large ball would rest in a hemispherical race lined with smaller balls. The larger ball is prevented from falling out by a covering

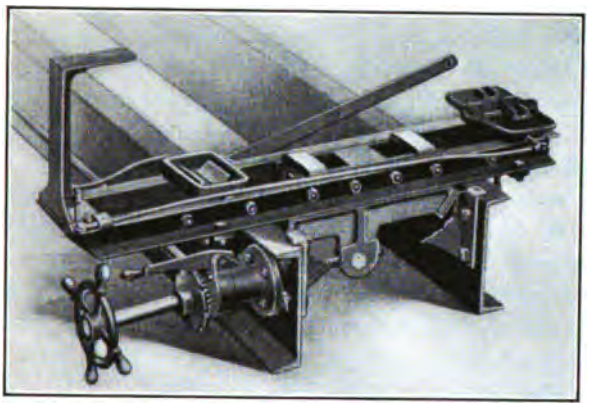

FIG. 218.

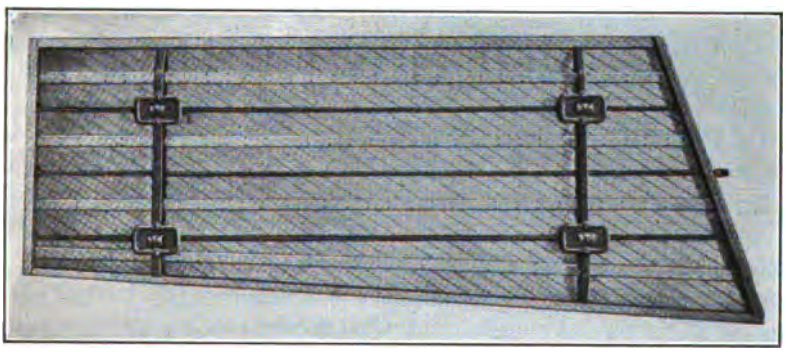

FIG. 219.

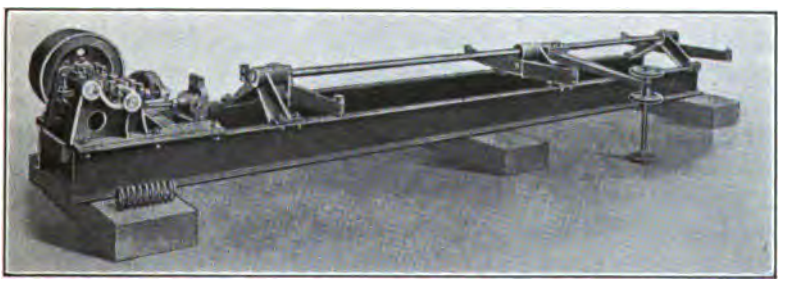

FIG. 220.

with a circular opening fitting around the large ball with sufficient clearance, so that it could turn freely, but not being of sufficient diameter to permit the ball to fall through it.

The earliest means for tilting the tables consisted of a number of wedges connected to a wedge rod operated by a hand wheel or lever, with a sector at the lower end working into a rack secured to the wedge rod. The change in character of foundation from a wide frame to a long narrow one has made it possible to hinge the table centrally. This has been taken advantage of by the makers of the Card and Wilfley tables in the manner which has been described.

Head Motion for Tables.—A very important mechanical element of a shaking table is the head motion imparting stratification and advance to the grains fed. The earliest head motions were bumping devices consisting of a cam which moved the table backward against a spring or against a weight. After the cam had passed the cam plate, the spring or weight advanced the table with accelerated motion until it brought up sharply against a bumping post. The Gilpin County bumper has a head motion of this kind. The accelerating motion kept the grains from slipping on the deck and when the table was brought to rest against the bumper, the grains continued to advance by their inertia. This form of head motion was a better stratifier than modern table motions, but is too destructive to the table. Progression in this form of head motion is also too sharp. A common error in regard to the effect of a differential motion is that the grains are advanced solely by a sharp return of the table very much in a way that a paper would be sharply pulled out from under a book on a table, leaving the book in a position ahead with reference to the final position of the paper. This mode of securing advance would require that the forward motion of the table be very slow to prevent slippage on the deck, and it will be evident on a little reflection that there is distinct loss of time in operating under this principle over means just as readily obtained, namely, an accelerated forward motion giving the grains time to partake of the deck motion and a uniformly retarded return which is the same thing as a quick return. The difference will readily be seen by experimenting with a coin and piece of cardboard giving the cardboard a series of sharp backward jerks, then a series of backward and forward movements, the forward movements being accelerated. The majority of head motions are of the toggle type. To understand what is affected by this form of head motion, reference should be made to Fig. 221 (Fig. 222 shows the head motion assembled) showing the principle of the Wilfley head motion, which is described as follows:

A is the center of the pitman shaft which has a fixed eccentricity and the pitman is of length *AB*; *C* is a point capable of adjustment in a vertical line; *D* is a point which moves horizontally forward under the movements of the pitman *AB*. *BC* and *BD* represent the toggles brought together at a common center *B* and *BC* equals *BD*. Let it be supposed that *D* and *C* are on the same horizontal line as they will be actually when the table is set to give the shorter stroke. The diagram is shown when the pitman is in its lowest position or just before it begins to move upward, and *D* forward and when the

the table is on the point of return. C is fixed for any particular adjustment. Let α be the angle formed by the two toggles with line DC in a position, then for equal increments of the raising of the center B, D moves forward amounts which are equal to cos αDB minus this value for the previous position; that is, if the center B moves upward with uniform motion, the table will move backwards with a retarding motion, for cos α increases in value very slowly as α approaches zero. Offsetting this retardation to some extent the crank on the up movement has an accelerated motion with respect to vertical increments of movement, until the horizontal position is reached, when the motion begins to be uniformly retarded. As the point C is raised to increase the length of the stroke, the angle made by the toggles with one another increases and the acceleration and retardation produced by the fall and rise of the crank increasingly becomes sharper and less time is lost be-

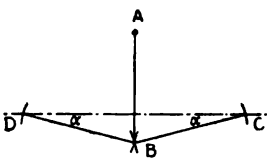

FIG. 221.

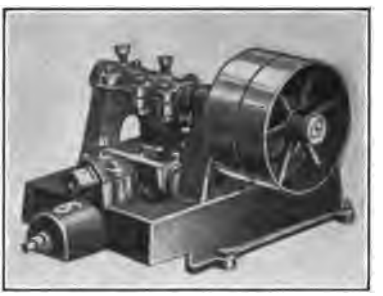

FIG. 222.

fore the table starts to move forward. The theoretically perfect curve of movement would be one which satisfied the equations $s = 1/2\ at^2$ and minus $1/2\ at^2$ where s would be the distance the deck had advanced or receded in time t, or one-half a revolution of the table. The cards of shaking table are space-time cards. To obtain them a pencil point is held on a table while in motion, and with the other hand a block of paper is moved up or down with a rapid uniform vertical motion. Knowing the number of revolutions at which the table is running, the ordinates can be laid off in equal spaces which correspond to exact fractions of time. On examining the Wilfley cards of short stroke shown in Fig. 223 of the actual motions of the No. 6 head motion, it will be seen that the cards are flat in the lower portion due to the small forward movement of the toggles when near the horizontal position. The dips in the cards are due to a toggle passing up through the horizontal position and returning through it to complete the downward movement.

To obtain greater length of stroke the center C of the rear toggle is raised, which increases the angle between the toggles, and since the cos of an angle increases very much more rapidly for large angles or angular changes of increment, the forward acceleration and backward retardation of the Wilfley head motion would be much more perfect for large strokes

than small. This is a defect in all the head motions of the Wilfley table which is not found in the No. 1 or King and Darragh shown in Fig. 224. As will readily be seen, the pitman is inclined and secured to the extended

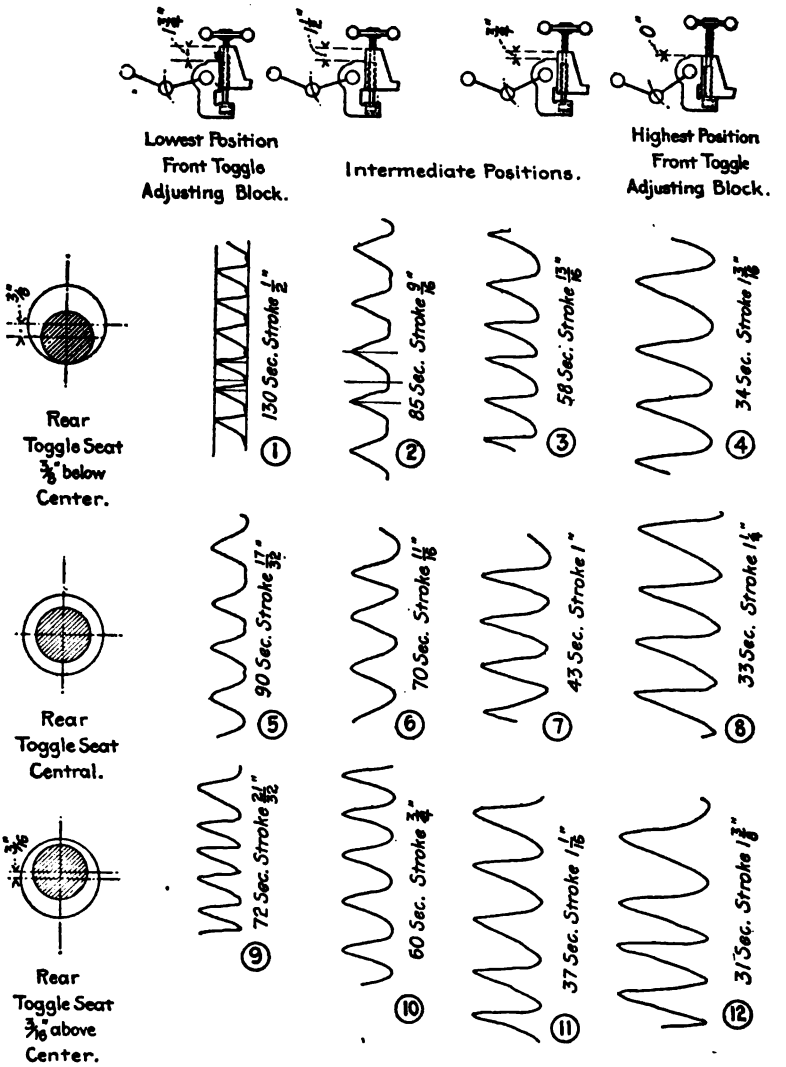

FIG. 223.

end of a curved toggle whose radius is equal to that of the pitman. The curved portion of the toggle is designed so that the pitman can slide in it, making it possible to make the stroke longer or shorter at will without in the least affecting the angle in the toggles as they may be placed at the

beginning of the stroke. Consequently with this form of head motion the differential is unaffected by changing the length of stroke.

The earliest form of head motion on the Card table was of the form shown in Fig. 225. It gave an accelerated forward motion and uniformly retarded return motion, from an increase of length of lever *d* and hence increasing velocity imparted to the deck as the table advanced, and reverse conditions

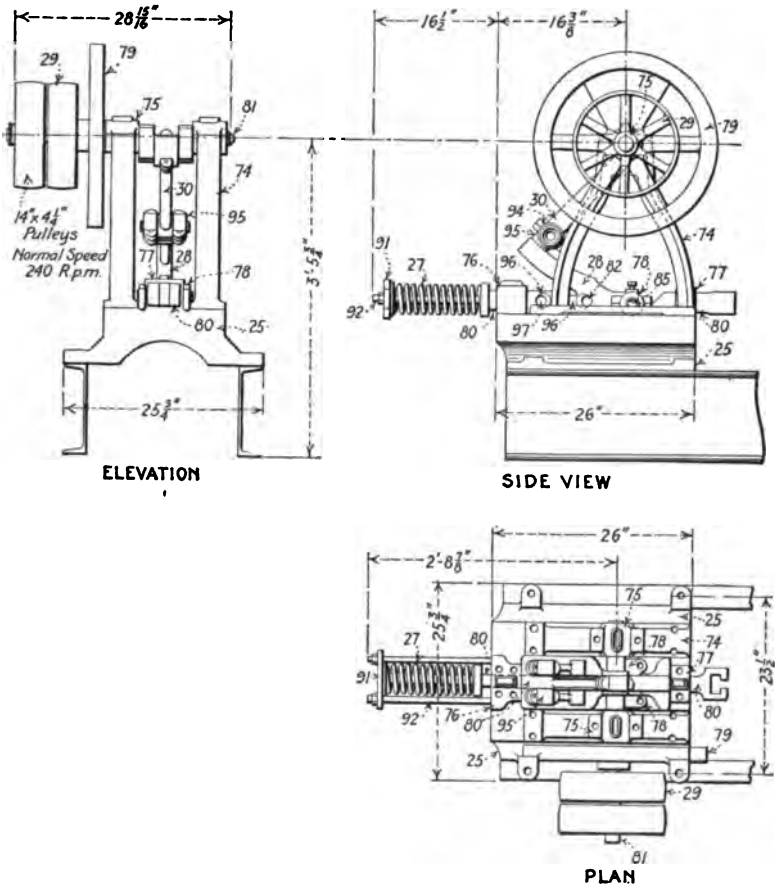

FIG. 224.

on the return. By moving the block *f* up or down, the stroke could be changed. In the latest model, a compact form of the King and Darragh motion is used (see Fig. 226).

The head motion of the Deister table made by the Deister Concentrating Company is a very compact, well made device, and has the advantage that the differential and stroke may be changed independently of one another. This head motion is shown in outline perspective in Fig. 227 and in detail

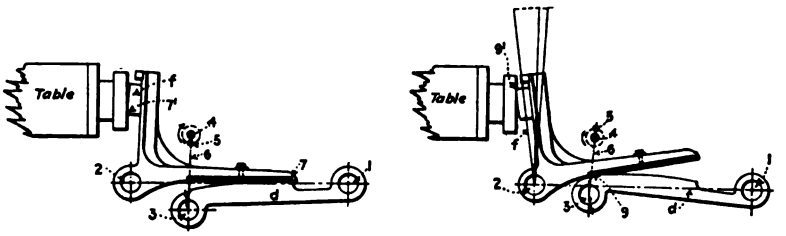

FIG. 225.

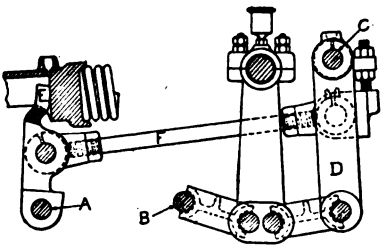

FIG. 226.

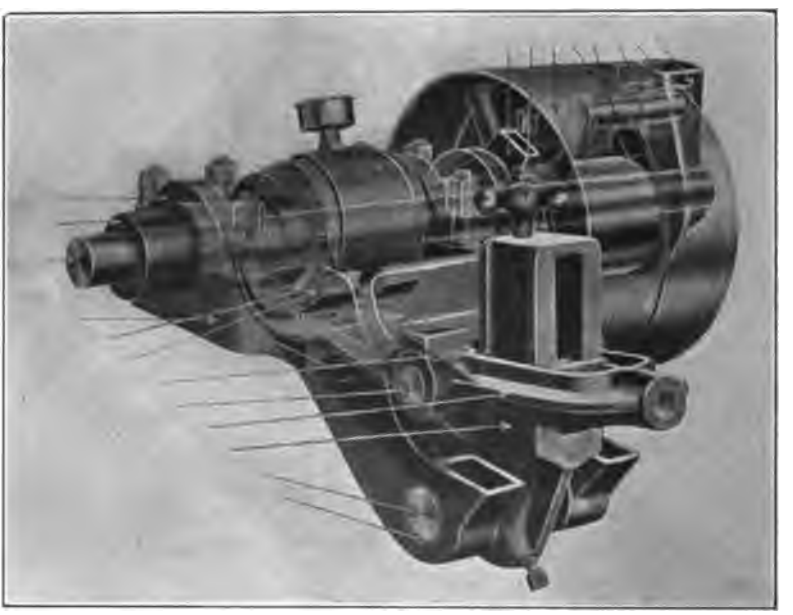

FIG. 227.

in Fig. 228. Referring to Fig. 228 the driving mechanism is mounted in a main frame 1 provided with brass bush bearings 2 and 3. The driving pulley 4 and loose pulley 5 are mounted on a large cylindrical extension of the shaft bearing 3. By loosening the nuts this eccentric, which is

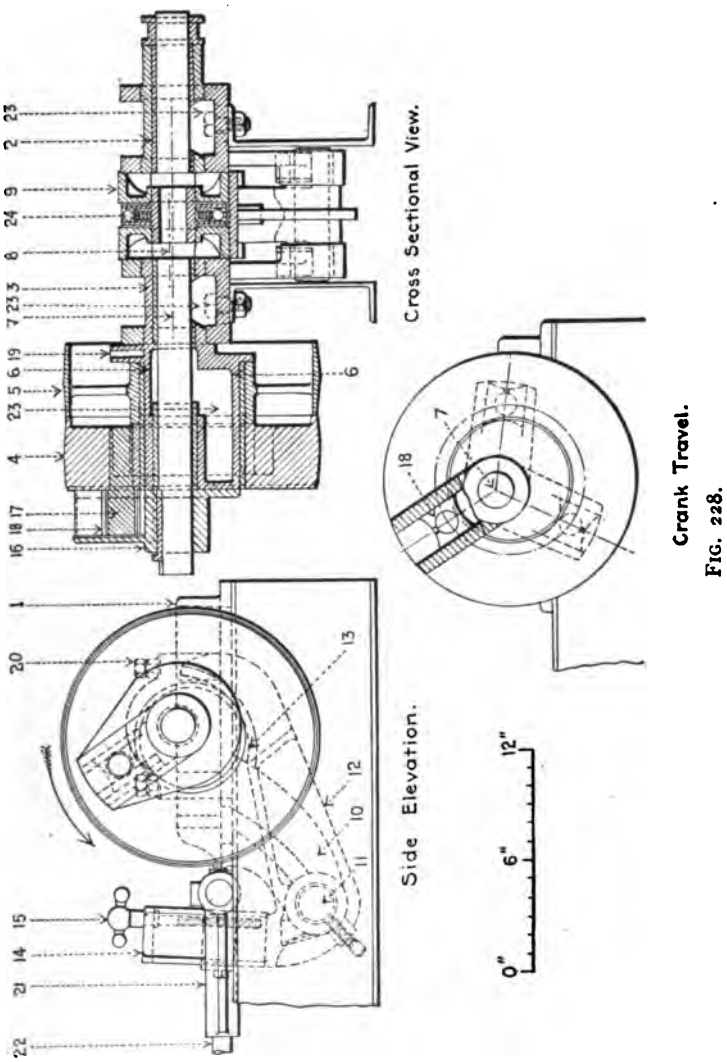

FIG. 228.

held firmly in the main left-hand bearing, as shown by the views, can be turned by a lever placed in the recess of a lug 19 from a position where the center of the pulley and the center of the shaft are coincident, to the extreme opposites, giving greatest eccentricity of the two centers. The main shaft

7 and the second eccentric which is fixed to it and on which rotates a 6-in. revolving roller 9, gives a rocking motion to lever 12 (side elevation) mounted in a two bracket extension 10 to the main frame. The bell crank communicates motion to the table through the yoke 21. In a slotted upright head, 14, of the bell crank is fitted a threaded hand piece and stud 15 for adjusting the length of the stroke. Secured to the end of the main shaft 7 is the crank 16 which is attached to the crank pin 17 in the drive pulley 4. A brass box 18 in halves encases the crank pin and slides in the

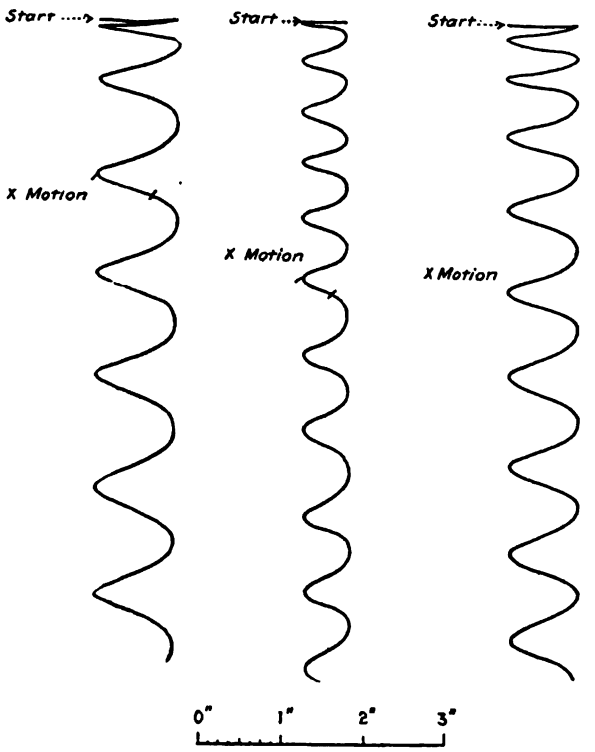

FIG. 229.

box crank, when the shaft and pulley centers are not coincident. The table is urged forward by the table spring, and this also holds the curve face 13 of the belt crank up against the roller 9.

To understand the action of the adjustment, let it be supposed that at the moment the table is in the extreme forward position, the crank is in the position nearest to the shaft center then it will be evident that the table is moving forward at the maximum speed, since the pin 17 moves with uniform velocity of translation with respect to the center of the pulley, but the motion communicated to the shaft is at any point inversely as the center is from

the center of the shaft. To obtain the greatest differential, the centers of the pulley and eccentric must be placed as widely apart as possible, when there will be the sharpest accelerated motion ahead and reverse conditions on the return. To obtain less differential, there must be less eccentricity. Some typical cards of the Deister motion are shown in Fig. 229. Their uniform shape and lack of spring influence are very plain.

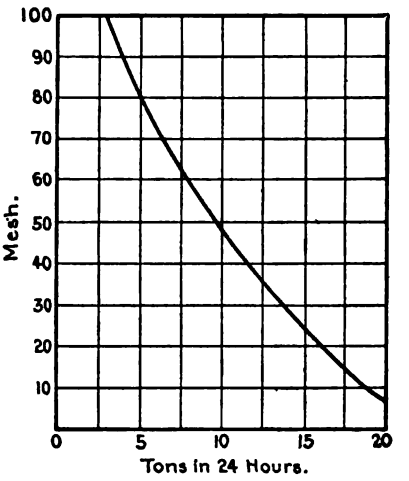

FIG. 230.

The average capacity of sand machines is given by the curve, Fig. 230. An 80-mesh quartz grain is usually considered the low limit in size which can successively be treated on these machines and an 8-mesh quartz grain the upper limit. The difficulty of treating the coarse material lies largely usually in the loss of mineral from included grains. If sand tables were mounted on the jig floor level, this difficulty would disappear to some extent, for sufficient fall would then be provided to route the middling for retreatment. This difficulty would not entirely disappear, since with a large amount of included mineral the overlap would be wide and it would be difficult to cut a clean tailing. At the other extreme treating fine feeds and with quartz grains of 80 mesh size, a classified feed would have concentrate grains so small that they would float away in the current which crosses the machine.

Length of Stroke.—The length of stroke on these machines ranges from 3/4 in. to 1–1/16 in. for material ranging from 8 to 30 mesh, and for finer material 1/2-in. stroke is ample. For the coarse sizes the revolutions per minute would be about 245. The power required for each machine would be very close to 3/4 horse power. There does not seem to be the intimate relation between length and number of strokes on differential tables that there is for jigs; that is, within certain limits changes of stroke and revolutions per minute do not affect the quality or work of the machines. In a general way with fine feeds a short stroke and large number of revolutions per minute would give the best results, and the reverse condition for coarse feed; but this is not an invariable rule to follow. Tests carried on in the mill over long periods are the only safe guide as to what conditions are best for any particular feed. The same reflections apply to riffling. In a general way, the area made by the sum of the longitudinal sectional areas of the riffles should increase with the size of particle treated, but there are no figures to prove this, probably because of the cost and difficulty

of experimentation. Some mill men have claimed to have increased their saving on fine feeds by putting on very shallow riffles, running the table quite flat, and giving it a gentle differential movement. If tables of the shaking type are used to clean up concentrates from canvas plants or round tables, then all the factor affecting the efficiency should be carefully investigated so as to reduce the amount of free mineral which would return to the slime devices in the form of table tailings for retreatment.

Arrangement of Sand Tables.—If the table rooms are laid down on the ground, the ideal support for sand tables is concrete piers, three in number for Wilfley and Card tables and arranged on the line of the channels forming the base frame. The Deister tables require a greater number of supporting points. In my own practice I never set tables closer together than to form a clear aisle 2 ft. wide, whose axis is parallel to the line of the head motion. The metallurgist may satisfy himself that a closer spacing is permissible, but the mill men will not see the merit in such close spacing. The decks of the tables should be high enough above the floor so as to provide sufficient room to take time samples for the tailing, middling and concentrate. The last two products give no trouble when the tables are set at the standard height of 30 in. measured from the top of the water box to the floor. Where the table is at this height, trouble may be experienced with obtaining samples of the tailing, for the tailing launder if built with the usual double slope of 1–1/2 in. to the foot, will leave too little space below the point where the vertical down-going spout is inserted, for anything but the shallowest receptacle. On this account, if this form of laundering is adopted, it will be best to raise the tables from 4 to 6 in. above the standard height. I prefer to make the vertical spout, leading from the launder, out of a short length of 3-in. pipe screwed into a flanged union bolted to the launder. This pipe ends 3 or 4 ins. above the floor and discharges into a shallow square hopper rising from the floor and leading to the fixed spout for carrying away the tailing. On unscrewing the piece of pipe a clear space is obtained for introducing the sample receptacle. The tailing launder should run the entire length of the table and not end at the concentrate launder, or what is the same thing, the concentrate launder should end at the tailing launder. The reason for this is that if the table is run flat, the tailing can be readily spouted into their appropriate launder and the middling also.

The number of products to be carried away from concentrating tables in addition to one or more grades of concentrate, will be (1) slime and water which must be thickened and treated on slime devices without means for stratification; (2) a sandy tailing which can be rejected, and (3) middling, consisting of included grains and free coarse mineral, due to overlap, from reason which have already been stated. Some attention of late years has been devoted to the problem of recovering this free mineral, where middling from the tables are reground, prior to such comminution. Some of the suggested modes of recovering the free mineral have been by screening, mak-

ing an enriched oversize by classification and by jigging. The last mode seems to offer the most promise. Owing to their compactness, the Richards and Plumb jigs have been suggested for this service. Since the tonnage is quite small, it may be possible to mount tiny jigs below the end of the table, which would be actuated by the stroke of the table through a bell crank. For gathering concentrates where there is lack of head room, for direct flowage to settling bins, drag conveyors may be employed of the type in which flights are secured to an endless steel rope or a belt.

Water Used on Sand Tables.—The water used on shaking tables is usually given in the catalogue of the manufacturers as ranging from 5 to 25 gal. per minute, but even 10 gal. of wash water per minute is a flood. If the linoleum is stretched so as to give a perfectly plane surface, the water may be reduced to 3 to 8 gal. per minute. The table should be run as flat as possible. All tables should be thoroughly swept with a stiff broom once a day. Where the water supply is variable in quantity or where there is liability of chokage at the valve due to chips or trash in the water, it will be best to allow the water to flow into little cones, one for each table, overflowing slightly to maintain a constant head, the cones being mounted on a standard rising from the floor, and control of the flow of water being obtained by a valve between the cone and the table. The cone should be provided with a plug at the bottom for removing sand. The nipple for the outgoing water flowing to the table can be placed about one-third the distance below the surface of the water of the cone. At a maximum one man can take care of 20 machines.

Vanners.—For treating material finer than 80-mesh quartz grain, the vanner maintains a lead among stratifying machines. Fig. 231 shows the side shake machine as manufactured by the Allis-Chalmers Company. Figs. 232 and 233 show the Isbel vanner which in mechanical features is an improvement over the original Frue vanner. End shake vanners have also been manufactured and they are said to have the advantage over side shake machines of making a somewhat lower tailing, but at the expense of a lower grade of concentrate. Plain rubber belts are generally used on vanners with various forms of edge or lip, but the heavy edge whose section is a 90-deg. quadrant, is the standard. Belts with transverse corrugations have been used and there is some evidence that they reduce the tailings loss, but the proof is not conclusive. For a long period vanners almost exclusively occupied the field in wet concentration in treating slimes, and prior to the advent of the Wilfley table the sand field as well in most American concentrating mills. Of late years other machines of simpler make have encroached on the field of the vanner, and since all slime is ultimately being retreated on slime devices, that is, non-stratifying devices, the possibly better saving effected by the vanner over the work done by its modern competitors is largely offset by its greater complexity, cost of upkeep, skilled labor for its operation, and its inability to make more than one mineral

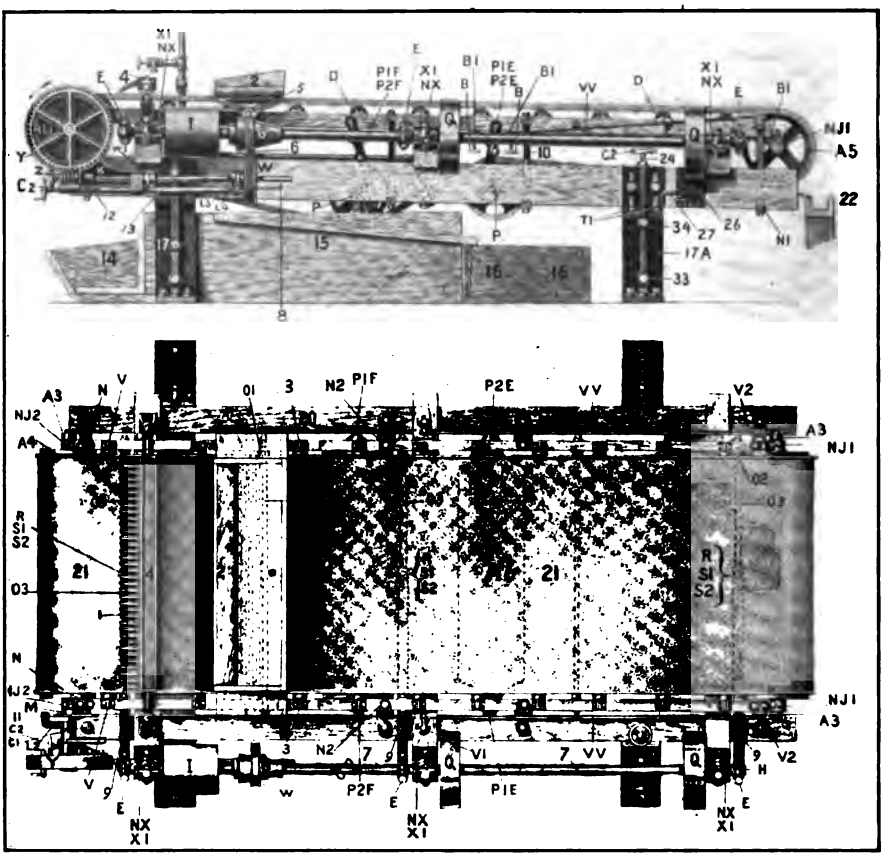

FIG. 231.

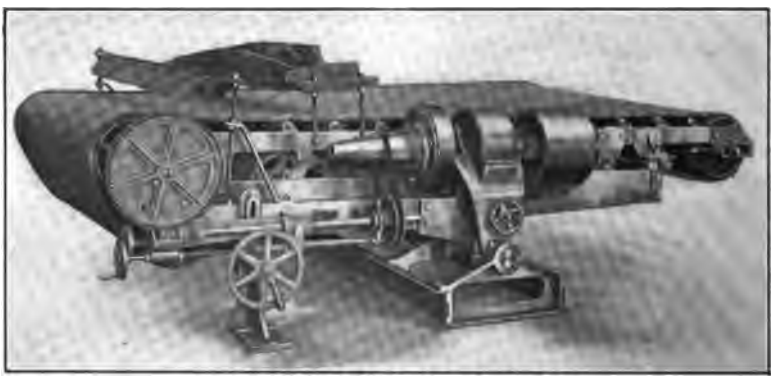

FIG. 232.

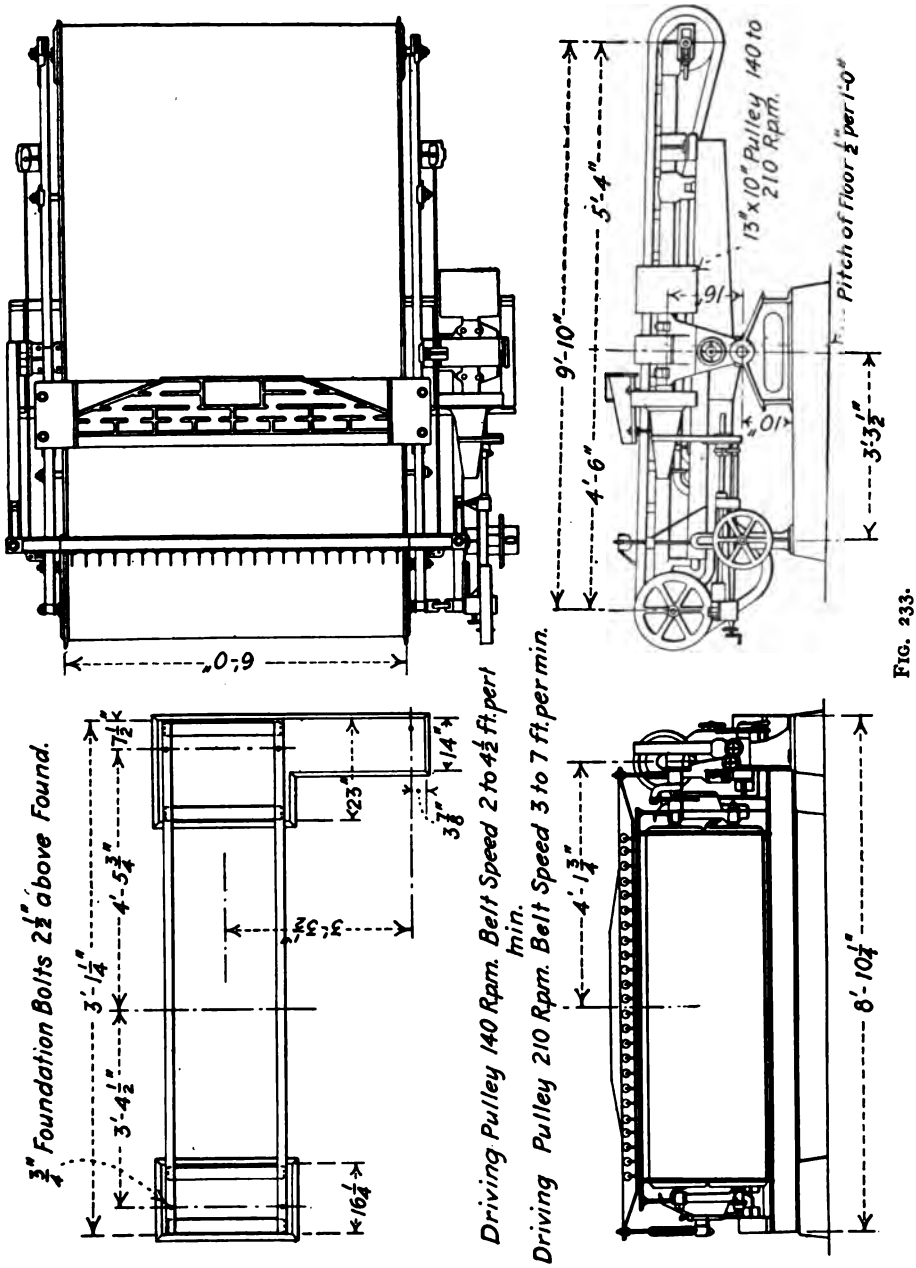
3/4" Foundation Bolts 2 1/2" above Found.
Driving Pulley 140 Rpm. Belt Speed 2 to 4 1/2 ft. per min.
Driving Pulley 210 Rpm. Belt Speed 3 to 7 ft. per min.
13"x10" Pulley 140 to 210 Rpm.
Pitch of Floor 1/2" per 1'-0"
6'-0"
9'-10"
5'-4"
4'-6"
3'-3 1/2"
3'-1 1/4"
4'-5 3/4"
3'-4 1/2"
7 1/2"
14"
23"
3 7/8"
3'-3 1/2"
16 1/4"
4'-1 3/4"
8'-10 1/4"

FIG. 233.

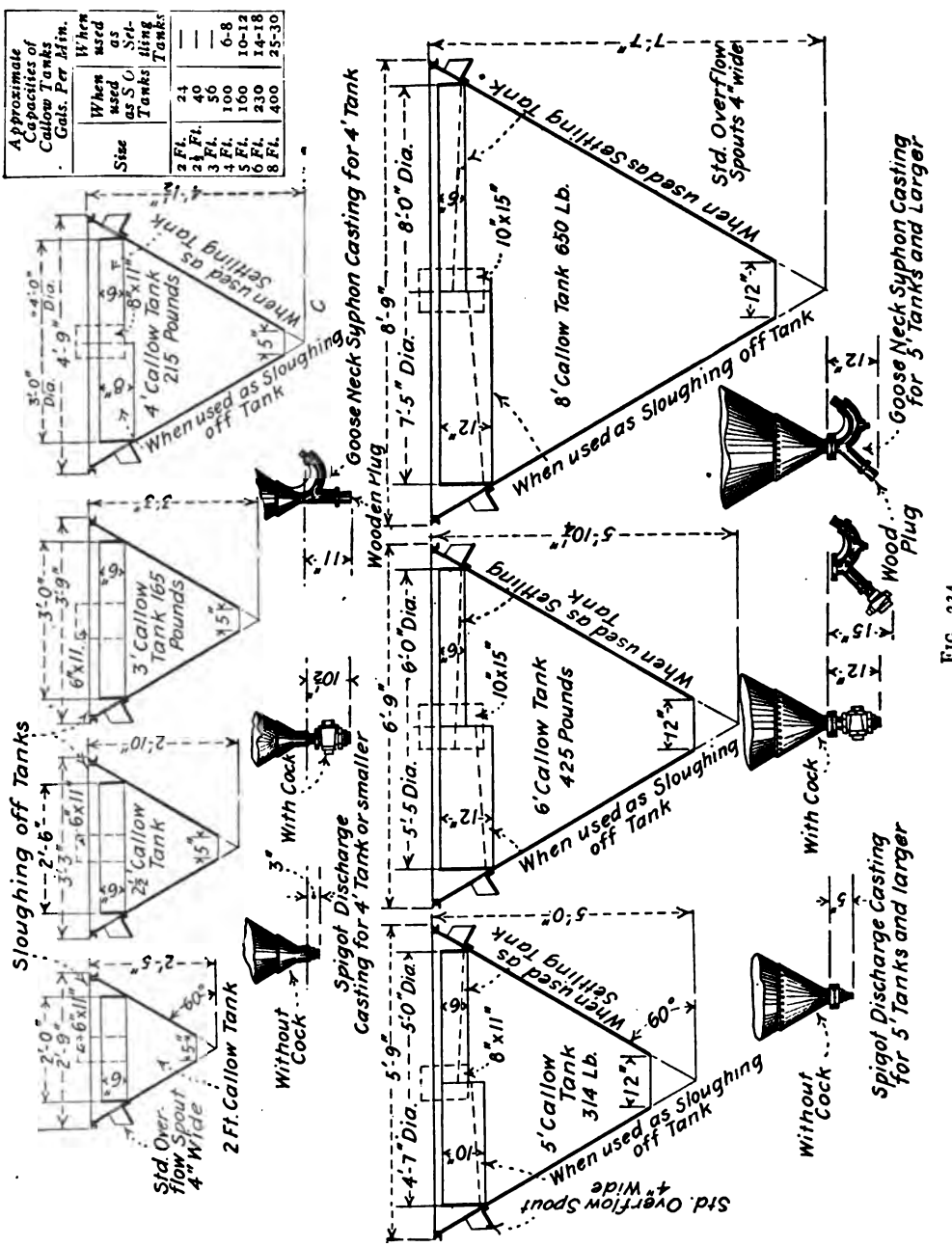
Approximate Capacities of Callow Tanks Gals. Per Min.
Size | When used as S.O. Tanks | When used as Settling Tanks
2 Ft. | 24 | —
2½ Ft. | 40 | —
3 Ft. | 56 | —
4 Ft. | 100 | 6-8
5 Ft. | 160 | 10-12
6 Ft. | 230 | 14-18
8 Ft. | 400 | 25-30
Sloughing off Tanks
2 Ft. Callow Tank
Std. Overflow Spout 4" Wide
Without Cock
Spigot Discharge Casting for 4' Tank or smaller
With Cock
3" Wooden Plug
Goose Neck Siphon Casting for 4' Tank
Wood Plug
Goose Neck Siphon Casting for 5' Tanks and Larger
Spigot Discharge Casting for 5' Tanks and larger
Std. Overflow Spout 4" wide
Std. Overflow Spouts 4" wide
When used as Settling Tank
When used as Sloughing off Tank
2½' Callow Tank
3' Callow Tank 165 Pounds
4' Callow Tank 215 Pounds
5' Callow Tank 314 Lb.
6' Callow Tank 425 Pounds
8' Callow Tank 650 Lb.

FIG. 234.

separation. In the majority of mills the vanner practice is very bad. Machines are not kept in repair and no attempt is made to determine the adjustment best suited to the feed being put upon them.

The thickened pulp from the sand-slime separating devices should be led to *spitzkasten* for preparation of feeds for the vanner or other slime machines. For thickening pulp tanks may be employed. The Callow tank owing to its cheapness and efficiency is excellent for this purpose. The capacities and dimensions of Callow tanks are shown in Fig. 234. The Dorr thickener has the merit of consuming much less head room than cylindrical and conical tanks. An outline view is shown in Fig. 235. The inclined revolving rakes

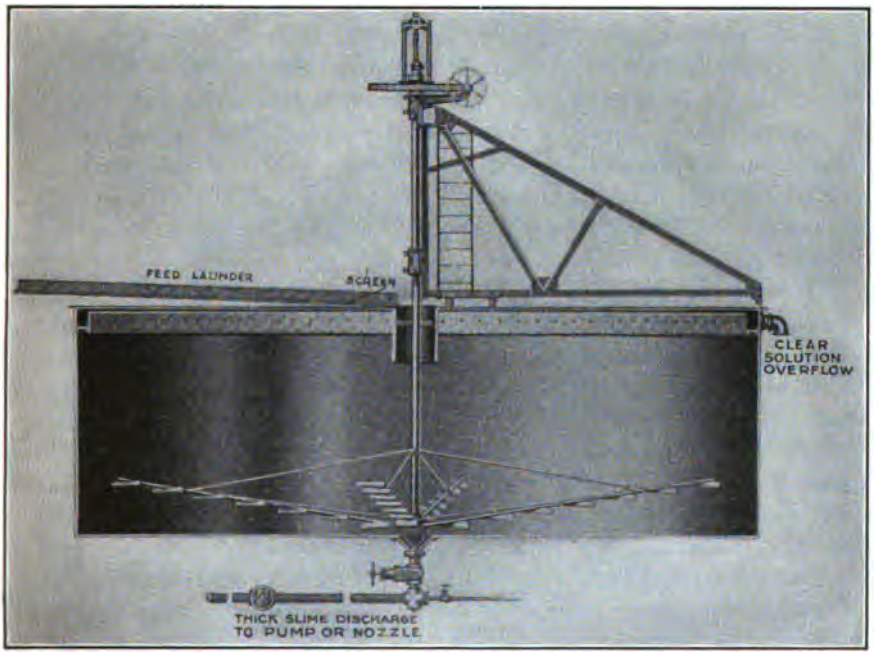

FIG. 235.

push the slime toward the central discharge point at the bottom. Only a fraction of a horse power is sufficient to revolve the rakes. The tanks are made from 10 to 50 ft. diameter and any desired depth. The principal requirements for spitzkasten are, (1) the feed apron must be horizontal; (2) the overflow must be level with the feed apron; (3) the feed must be spread evenly over the whole width of the feed apron; (4) the box must increase in area of cross section from the feed to the overflow end; (5) no portion of a spitzkasten must have a slope less than 60 deg.; (6) the final requirement, and the one most difficult to obtain, is the regulation of the tonnage from the different plugs. The table feeds can be regulated in point of tonnage more or less by the use of rising water, but the use of rising water in the spitzkasten is

a rather futile operation, for it forms eddies which carry nearly as much slime down into the discharges as would go down without it. The spitzkasten should be run so as to produce very slight overflows, the last plugs being very slimy material out of which very little concentrate will be caught. I prefer a spitzkasten of the form where the upper portion has straight sides which flare horizontally 4 in. for each foot of length. Suspended from the upper portion is a hoppered bottom with sloping sides and which increases in depth toward the overflow so as to everywhere maintain a cross section with a 60-deg. angle. There is a plurality of discharge goosenecks at the bottom of the spitzkasten, these being separated from one another in the body of a device by vertical partition boards. Owing to the partitions being so close together, it is impossible for slime to accumulate in the bottom of the spitzkasten causing slides, a defect of ordinary designs of spitzkasten. The goosenecks end in hose lengths and plugs are wired in the hose at the discharge end. The hose at the discharge end is secured to a curved piece of metal and as many of the discharges as desired can be hung on the launder leading to the machines to be fed. Not more than four products should be taken from a spitzkasten. Spitzkasten have a capacity of about 45 tons in 24 hours with material finer than 80 mesh.

If vanners are used as slime machines, all the possible adjustments should be tried out in a series of thorough tests to determine the proper figures. The method of determining the proper adjustment used by Dr. Gahl at the Detroit Copper Company's mill, is about as simple as any for the millman to follow. He split the feed for the vanner whose adjustments were to be found between this machine and another which was constantly run with all the factors unchanged. The machine whose proper regulation was to be determined was then operated with various changes of adjustment. The weight of metal in the concentrate of the vanner with fixed adjustments was called 100, then the saving of the other was expressed in terms of this weight, that is, if the test machine saved 100 lb. of lead during a run and the machine to be regulated 125, the saving was called 125. Wash water and slope are quite closely correlated. One series of tests would be concerned with variations in the slope, other factors remaining constant, a second series would determine the best proportion of solids. In Dr. Gahl's experiment the best percentage of solids proved to be about 18 per cent. Above and below this percentage with copper sulphide ore the extraction fell. The evil of too thick a pulp was found partially curable by increasing the amount of wash water. It was found that the question of side shake and belt travel were not so important as slope and consistency of pulp. Capacity of vanners will range from 3 to 10 tons for a 4-ft. belt, the smaller tonnage being with the finer slime and 10 ton for 30-mesh material, this being the economic range of size for the vanner, and 6 to 15 tons for the 6-ft. machine. A 4-ft. machine will weigh about 3000 lb. (crated for shipment), and a 6-ft. machine 3350 lb. The 4-ft. machine may be rated as taking 3/8 horse power and a 6-ft. machine 1/2

horse power. Consumption of water may be taken as 3/4 gal. per minute for 4-ft. vanner and 1–1/4 for the 6-ft. machine.

Deister Slime Table.—There are a number of stratifying slime machines in which the end shake is progressive as well as stratifying. The most prominent machine of the class is the Deister slime concentrator made by the Deister Concentrating Company which is shown in Fig. 236. Fig. 237 shows the height and arrangement of the riffling of this machine; the same head motion as is used on the Deister sand table is employed. The slime is fed at the upper end of the table and around a portion of the side (see

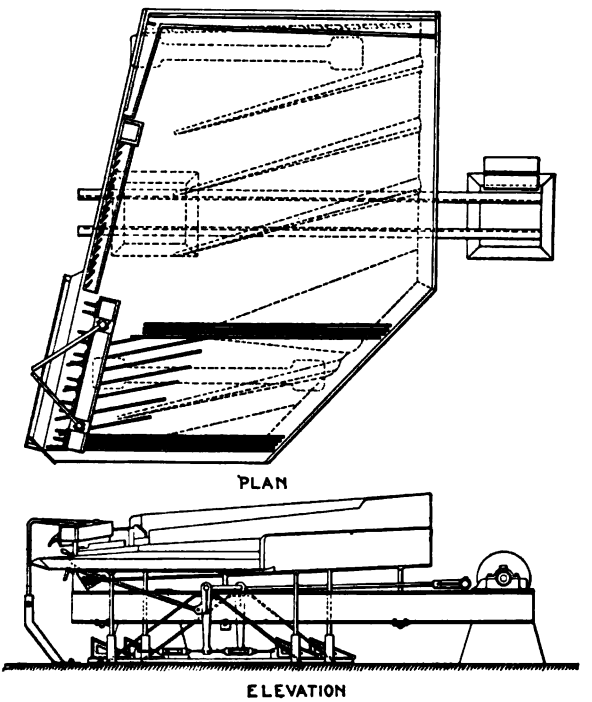

FIG. 236.

elevation, Fig. 236). The upper part of the deck slopes backward toward the head motion and a pool of slimy water is maintained in this portion by the ends and upper side and the four transverse riffles in the central portion. The head motion moves the settled stratified material in the direction of the water box where it comes under the washing-back influence of the wash water, the tails being washed back and forced by this means and the sidewise slope of the table to take a course sidewise and toward the head motion. They discharge at the lower right-hand corner of the machine. The concentrates take a diagonal course discharging at the lower left-hand portion. A second water box is provided in the concentrate discharge region for wash-

ing back remaining sand. The capacity of the machine varies from 6 to 15 tons in 24 hours, depending on the size of the grain, the possible range of size being about the same as the vanner. The machine requires about 1/2 horse power to drive and weighs 1850 lb. crated. The average stroke recommended is 7/8 in. and the number of revolutions per minute 300.

Slime Treatment.—In American ore dressing practice re-treatment of all slimy water is being more and more practised on what may be termed ultimate slime devices. The stratifying machines give a clean concentrate causing an increased free loss in concentrate grains as the size treated

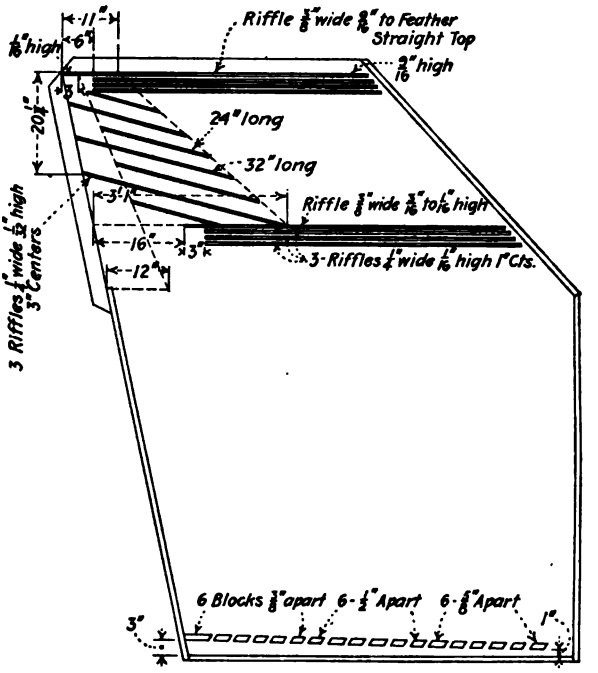

FIG. 237.

diminishes owing to the shaking motion, keeping grains of this kind in suspension. The use of ratifying slime machines is imperative for obtaining clean concentrates, since these cannot be made on the ultimate slime devices. Preparatory to ultimate slime concentration, the slimy waters must be thickened by means already described.

The best definition of *slime* of which I am cognizant from the millman's point of view is that portion of finely ground rock or ore which on being mixed by hand with water in a bowl does not settle promptly. In order to get separation on concentrating machines, settlement must be a matter of very much less than 1 minute. It has been shown by Barus that particles without the range of the highest powered microscope have a finite

rate of settlement, but grains very much coarser than these would be slime from the millman's point of view. Colloidal phenomena will explain the non-settlement of finely divided matter if there be present a reversible organic colloid. Most ores come from too great a depth for substances of this kind to be present in them. Again in most ore dressing problems the amount of particles present sufficiently small to go into the colloidal condition is so small that the colloidal theory of non-settlement would have no practical application.

The ultimate slime devices take advantage of the film action which has been mentioned in referring to the clean-up surface of Wilfley tables. Film action takes place purely and simply when the layer of grains being treated are but one grain deep. The washing-back effect of vanners and other machines in which the sand and concentrate follow parallel reverse lines is practically identical with film separation on layers but one grain deep, the difference being that where there is a bed of material, the top layers are successively under the action of filmy water and may be considered layers one grain deep and resting on a surface made up by the layer next below.

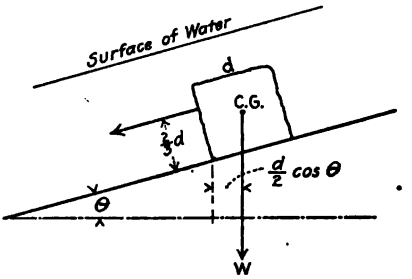

FIG. 238.

Let d (Fig. 238) equal the edge of a cubical grain in feet and s its specific gravity, then wd^3s equals the weight of the grain. If m equals the coefficient of sliding friction of the surface in which the grain is in contact, then the force required to move the grain on the surface with slope θ, is $md^3ws \cos \theta$. The kinetic energy of a flowing stream of water, since the velocity increases from zero at the bottom to twice the average velocity at the top, is twice what it would be if the velocity were uniform from top to bottom. hence the expression for the pressure exerted on the face of the cube would be for a stream of cross section d^2, $\frac{2\ wd^2\ v^2}{g}$ where w is the weight of 1 cu. ft. of water and v the average velocity of the stream pressing against the grain of edge d, the grain being in contact on one of its sides with the cleaning surface. On equating the two expressions the value for v will be found when the pressure of the flowing film will be just on the point of causing slide. $v = A(ds)^{1/2}$ where A is the constant and equal to $\left(\frac{gm \cos \theta}{2}\right)^{1/2}$ This formula will apply where the slope and frictional contact of grains of different kinds are the same. The average velocity of the flowing stream will vary with the square root of the hydraulic radius. In the case of a canvas plant or other fixed rectangular kind of treating surface, the hydraulic radius would be twice the depth of the film plus the width of the cleaning surface divided into

the cross-sectional area of the film. To fix the mind on the elements of film separation, let it be supposed that with a certain slope and with a given quantity of flowing pulp the velocity of the whole flow is such as to just move a certain grain of quartz of size d, then evidently all quartz grains of greater diameter ought to move and with increasing velocities as their diameters become greater, but to merely start them the average velocity which acts on them has only to increase as the square root of the diameter as the formula above shows. In this analysis the film is assumed to be of indefinite depth but sufficiently deep to submerge the largest grain which arrives on the treating surface and the velocity of the film is assumed to increase from zero to a maximum at the surface of the water. Under these conceptions there must be a certain depth of film measured from the treating surface upward where the velocity will be sufficiently great to move a grain of mineral of greater specific gravity than quartz. Let s'' be the specific gravity of such a grain and let d'' be its edge. Then evidently the velocity to start it is given the expression $A(ds)^{1/2}\frac{d''}{d}$ but the velocity required to move is also given by $A(d''s'')^{1/2}$. On equating these two and transposing $d'' = \frac{ds''}{s}$, that is, the diameters are in the ratio of the specific gravities. If quartz and galena were being film sized with a certain amount of water, all the grains below a certain size of the galena would stand fast on the table and the larger ones be washed away, and all quartz grains above the size $\frac{d''2.7}{7.6}$ would be washed away. All the coarse sizes of galena, however, would have been removed by classification and concentration on stratifying concentrating machines. The slime fed on the ultimate slime devices will consequently consist of very fine heavy grains and relatively coarse quartz grains, consequently with the proper amount of water on the film sizing surface it will be possible to wash away most of the quartz grains while the bulk of the heavy grains stand fast. The point of application of the force produced by the current on any grain of edge d will be one-third the distance below the upper surface. The grain will consequently roll when the two moments shown in Fig. 238 are equal, or when $\frac{4wd^3v^2}{3g} = \frac{d^3wsd\cos\theta}{2}$. As before, v equals a constant times $(ds)^{1/4}$, the constant in this case being $\left(\frac{3g\cos\theta}{16}\right)$, that is, unless m equals 0.38 the particle will tend to slide rather than roll. Round grains will roll, but flat thin grains when of considerable volume will neither roll nor slide, but remain adhering to the treatment surface. It has been assumed in the discussion that the film of water flowing down the treatment surface has a smooth, plain top. This is only true when the amount of water is very small and when the water increases over a certain amount it breaks into the standing waves. In some experiments made

by Richards, waves of measurable height were noted with 0.5 lb. of water per ft. of width of treatment surface; when the slope became as great as 11 deg. with 1 lb. of water they were measurable when the cleaning surface had a slope of 4 deg. and for successive increments of 2 and 3 lb. of water they were measurable at 3 deg. and 2 deg. respectively. These waves attain a maximum height, measured with respect to the trough, when there are 3 to 5 lb. of water per ft. of treating width regardless of the slope; with amounts of water above this the heights of the waves measured in percentage of the depth of trough falls off. Where there is a very small amount of water, less than 3 lb. the film may be imagined to vary in velocity from zero at the cleaning surface to a maximum at the top of the film, the film moving with a plain upper surface. With 3 to 5 lb. of water, a standing wave is formed which moves forward with uniform velocity from top to bottom. Above this amount waves form, but they appear to be a surface phenomena of the film, and below the wave the velocity will diminish to zero at the cleaning surface. With a very small amount of water and fine feeds the heavy minerals would be left clinging to the deck, while the quartz would be advanced downward. Where the water is increased so that a standing wave is formed, practically everything is carried over regardless of specific gravity. Where a large amount of water is used and the wave does not influence the whole depth of the film, the heavy mineral will again stand on the deck, while the quartz will be carried forward. But this would only apply where the feed is quite coarse, for with large volumes of water and fine feed everything would be carried down the deck. The practical rule, for treating very slimy products, would be small amount of water, 2 lb. per minute per ft. of treating surface, a high slope from 1–1/4 to 1–1/2 in. per ft., depending upon the specific gravity of the heavy mineral, the higher slope being used with galena and the lower with minerals of a specific gravity of iron pyrites. For material of about 20-mesh quartz, the slope should be 3/4 in. per ft. and 10 to 15 lb. of water per ft. of width of cleaning surface should be employed. It should be observed, however, that film sizing is entirely inapplicable to material of this kind.

The principal ultimate slime devices which are used in American mills are stationary canvas plants, revolving canvas plants, and revolving convex round tables. A good weight of canvas is No. 6 duck laid with the warp at right angles to the flow. The length of a panel will be 12 ft. in the clear and can be any convenient width, depending on the width of canvas obtainable. These panels will be hosed down about once an hour after first turning on clean water to remove stray quartz grains. The hose should be provided with a flat spray and the washing down of the concentrate can be further helped by brooming. The general arrangement of a canvas plant is shown in the drawings, Fig. 239, of a small experimental plant of two panels and arranged so that the feed can be thrown from one to the other. The

hinged board and double launder arrangement for deflecting tailing or concentrate into one launder or the other, is a usual feature of all canvas plants. For each row of panels there must be an extra one to be used when washing down the concentrate.

If there be no exact data obtainable by experiment, the thickness of pulp fed should be from 10 to 16 per cent. by weight of solids. The capacity of a

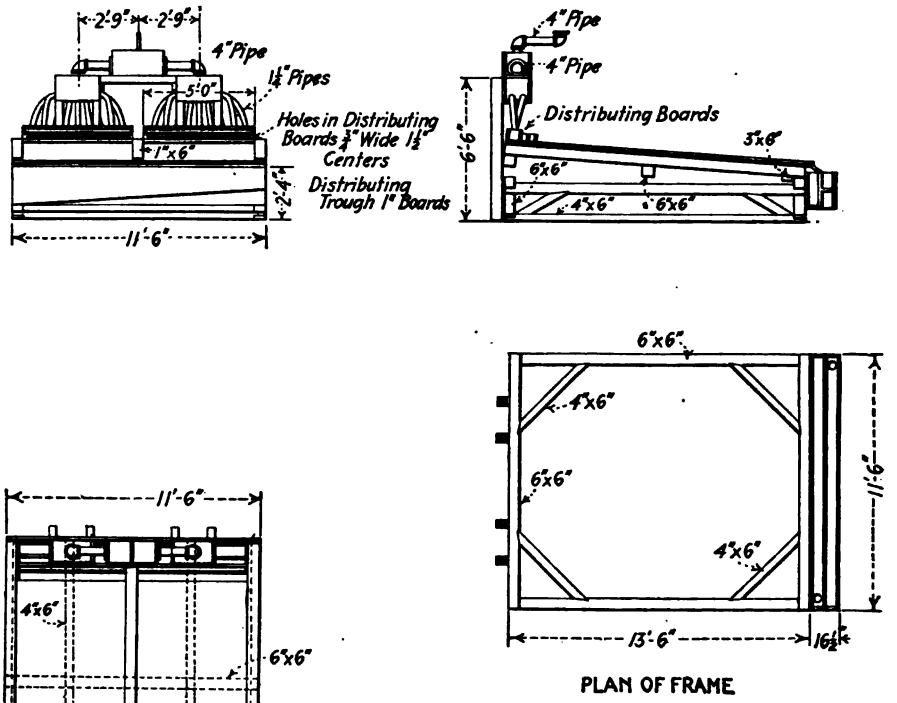

PLAN OF FRAME

FIG. 239.

canvas plant is about 125 lb. of pulp per ft. of width per hour for fine feed, and if it be reckoned that the pulp contains 12 per cent. of solids, the capacity per ft. of width of dry ore is 15 lb. per hour. A canvas deck will last about eight months, but will do its best work when new and rough and before being worn smooth by the ore and by being broomed and walked over. Fig. 240 shows a prospective view of a revolving canvas plant which does not differ from the stationary one in principal, but it is continuous in operation, washing

being performed automatically, and it takes up less floor space than a canvas plant.

The standard ultimate slime-treating device used in the United States is the multi-deck convex revolving round table. These machines will require about the same consistency of pulp as a canvas plant. They should revolve very slowly, 10 to 30 revolutions per hour. These tables are usually about 18 ft. in diameter and the slopes ranging from 1 to 1–3/4 in. per ft. They have a capacity of 5 to 12 tons per day per deck. At the Great Falls plant of the Anaconda Copper Company, there are 400 18-ft. decks in tiers of 20 decks, each deck receiving the feed containing about 12 per cent. solids and amounting to 7 tons per day and assaying over 2 per cent. copper. The concentrate obtained from them containing over 7 per cent. copper. The

FIG 240.

decks slope 1–1/4 in. per ft. and revolve 12 times per minute. The saving effected is between 50 and 55 per cent. The decks are of expanded-metal reinforced concrete supported on a steel frame. The concrete used is 2 parts sand below 1–1/2 mm. in size to 1 of cement. Each unit of 20 decks requires 3 horse power to drive. They are driven by a gearing below the lowest deck, a unit of 20 decks being supported below by rollers and a central pivot bearing. For machines of this kind linoleum or canvas may be employed in addition to concrete for a cleaning surface. The holding power of concrete may possibly be increased by mixing oil with the cement.

Improved forms of multi-deck flat film tables have appeared in later years. In these designs the deck is gradually tilted while receiving slime following a period when there is no tilting. At a certain moment during the

tilting action the feed is shut off, a wash water valve is automatically opened, and the concentrate is washed down, when the cycle is repeated. Machines of this type are manufactured by the Deister Concentrator Company and the Deister Machine Company. A. R. Wilfley also has a machine which follows this type to some extent, but which is also riffled and has a stratifying shake.

Concentrate Bins.—Jig concentrate is run to bins which overflow to tanks placed outside the mill. These bins can be constructed so that a side can be removed after draining permitting the bin to be entered with wheelbarrows or carts, or else the bins can be made hoppered and of sufficient height off the floor to run a cart under it. A very good cart is shown in side elevation in Fig. 241.

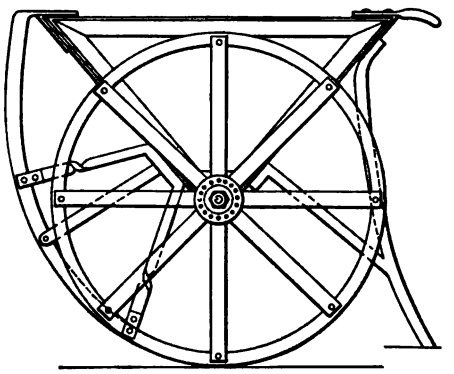

FIG. 241.

Bins for sand and slime concentrate should be braced from the sides and ends. There should be no tie rods passing through the body of the bins nor bracing bents with cap timbers. These bins are discharged by shovelling over the sides.

Outside settling tanks receive the overflow from all the concentrate bins. They may be made either rectangular or circular. The bracing should be by bent timbers if the tanks are made rectangular and the tie rods used in the bracing should pass through the cap and sill timbers at the ends and close to the posts.

Rectangular and Circular Tanks.—The relative merits of rectangular and circular tanks are discussed below. At least 1/2 sq. ft. of settling area should be allowed for each gallon of pulp flowing into them per minute. Rectangular tanks should be free from baffles and the pulp coming to them should be spread over the whole width of the tank at the entry end.

It is customary to estimate the velocity of flow in a tank in which there is a uniform current by the expression $\frac{Q}{A}$ where Q is the volume of pulp and A the cross section of the tank. If A is the area of cross section of the water then the expression is correct. But in a rectangular tank the cross section of the water can only be gotten by adding to the depth of water to the edge of the overflow the head of water on the overflow and multiplying it by the width of the tank. The logical sequence of ideas in regard to the flow is, quantity of pulp entering the tank produces a head of water on the overflow and head of water on the overflow produces a certain rate of flow in the body of the tank. Discharge from an overflow or weir is only a special example of

discharge from an orifice. For a thin slot in the bottom of a tank an approximate expression is $Q = \sqrt{2gh}.ba$, where b is the width of the slot, a the depth of slot and Q the quantity of discharge. If the depth a has to be taken into consideration the theoretical expression becomes

$$Q = 2/3b\sqrt{2g}(h + h')^{3/2},$$

where h is the head on the lower edge of the slot and h' the head on the upper.

If the slot be considered as moved progressively up the side of the tank, h and h' become smaller and smaller, finally the upper edge of the slot emerges from the water and h' becomes zero; the expression then reduces to, $Q = 2/3b\sqrt{2g}\,h^{3/2}$, which is the theoretical basic formula for discharge in weir calculation. It affords a means of obtaining the head of discharge from the volume of material entering a tank. This expression would only be theoretically true providing the cross section of the tank were infinitely great. If not, then the velocity of approach, which is the figure with which the millman is concerned, will make a reduction in the thoretical head. In weir work the velocity of approach is usually of minor consideration. Where it must be considered, the head obtained from the theoretical expression is assumed to be increased by an additional amount given by the expression, $h' = \frac{V}{2g}$, where V is the velocity of approach calculated from the expression $\frac{(d + h)w}{Q}$, in which d is the depth to the edge of the weir, w the width of the channel of approach and h the measured head of discharge, the channel of approach being of rectangular cross section. The error in this approximation will be noticed at once.

The correction to be made for velocity of approach is so small that, for weirs, correction in the approximate way given is well within the errors of observation. For a full discussion of this point Trautwine or Merriman should be consulted. In the calculations which follow I assume that, $h = \sqrt[3]{\frac{9Q^2}{8b^2g}}$, h being derived from the thoretical formula for Q.

Rectangular Tanks.—The efficiency of two rectangular tanks of the same superficial spread and with equal depths of water in each is the same. If a grain will just settle to the bottom in a square tank at the overflow it will just settle to the bottom in a long narrow tank of the same depth and area. If the depth of the water to the edge of the discharge be the same in both cases the long tank will be slightly more efficient because the head of water will be greater. I assume in both cases that the length of overflow is the same as the width of the tank.

The above statements are true for perfectly uniform flow only. Practically, the square tank would be the better because the rate of flow would be less and there would be less stirring up of slime from eddies and currents.

The converging current at the end of the long tank would be stronger and have influence for a greater distance back of the overflow than would be the case at the discharge of the square tank. The path of a particle settling in a rectangular tank would be, under perfect conditions, a straight line sloping downward toward the overflow. If the surface of the water be considered to be the axis of X and the axis of Y a vertical line at the end or point of entry of the tank, then the equation or path of a particle introduced at the origin is, $y = \frac{Vx}{m}$, where V is the rate of flow of the water and m the rate of subsidence of the particle, both in the same units.

Cylindrical Tanks.—In a circular or cylindrical tank fed from the center and overflowing the whole perimeter the path of a settling particle is given by the expression, $y = \frac{mx^2}{2RV}$, which is the equation of a parabola. In this expression R is the radius of the tank and V the velocity of the cylindrical section at the overflow. The origin is considered in the surface of the water at the center of the tank, the axis of X in the surface of the water and the axis of Y a vertical line passing through the origin.

In a cylindrical tank the horizontal velocity along or parallel to the axis of X can be obtained from the following proportion: $V : v_x :: x : R$, or $v_x = \frac{RV}{x}$, V being the velocity at the cylindrical shell at the overflow. It is evident from the ratio given above that the velocity must increase to infinity at the origin. If V be the velocity at distance R from the origin then the velocity v_x at any point x, must be inversely proportional to the distance from the origin. Now, $\frac{dx}{dt} = v_x = \frac{RV}{x}$, and $xdx = RVdt$. Integrating, there is obtained the expression $1/2x^2 = RVt$, $t = \frac{x^2}{2RV}$. In time t, however, the particle subsides the distance mt or y. Substituting $t = \frac{y}{m}$ in the expression $t = \frac{x^2}{2RV}$, there is obtained the equation of the path of a particle introduced into the surface of the water at the center of a circular tank, $y = \frac{mx^2}{2RV}$.[1]

If it be desired to determine the relative theoretical efficiency of circular and rectangular tanks, this may be obtained in the manner described below.

Theoretical Efficiency of Circular and Rectangular Tanks.—Let it be supposed that there is a circular tank of 20 ft. diameter and 4 ft. depth and it is desired to know how long a rectangular tank 10 ft. wide and 4 ft. deep must be to have the same settling power as the circular tank. Let it be assumed in either case that the flow of water entering the tanks is 2 cu. ft.

[1] I am indebted to A. G. Plant, of the University of Montana, for aid in solving this equation. From my assumption that $V : v_x :: x : R$, and that t along the axes was to be equated, he deduced the expression for y.

per second. From the expression, $Q = 2/3b\sqrt{2g}\,h^{3/2}$, the head of water at the overflow of the circular tank can be determined. In this case b is the perimeter of the tank and h will be found to be about 0.03 ft. The depth of the water in the tank is then 4.03 ft. V is then determined as $\frac{2}{4.03 \times 2\pi R'}$, the numerator being the number of cubic feet of water entering the tank. From $t = \frac{x^2}{2RV}$ can be determined the time in seconds required for a particle of ore or water to travel from the center to the periphery. In this case x equals R, and t is found to be about 633 seconds or about 10.6 minutes. In the case of the rectangular tank with b equal to 10 ft., h will be found to be 0.11 ft. As the water is 4.03 ft. deep a particle of ore of a size to just reach bottom in 633 seconds must have a vertical settlement rate of 4.03 divided by 633 or 0.00637 ft. per second. In the case of the rectangular tank with b equal to 10, h will be found to be about 0.11 ft. Then 2 divided by 4.11×10 equals 0.0486 ft. which is the velocity of horizontal flow. At a vertical subsidence of 0.00637 ft. per second it will take particles mentioned above 645 seconds to reach the bottom of the tank. In this time it has advanced a distance 645×0.0486 ft. or 31.35 ft. This would be the length of the rectangular tank equal in theoretical settling power to the circular one. The area of the tanks are respectively 313.5 and 314.2 sq. ft.

So far I have not considered the size grain which will just settle in these tanks, but a little figuring readily gives it. It is a grain of galena about 0.04 mm. in diameter. Theoretically, the rectangular tank is shown by the comparison to be better but practically it is inferior. The difficulty of creating a perfectly uniform current in a rectangular tank is insuperable. Indeed it is seldom tried. In the best settling tanks the water is commonly introduced from a box stretched across the width of the tank and having holes pierced in the side facing the overflow. This must create a sort of surface current breaking up into eddies and currents. In the case of the circular tank the theory shows that the velocity of entrance of the water may be comparatively great without in the least affecting its settling efficiency. The water may be introduced into the tank from the bottom, the distributing pipe rising vertically from the bottom and by suitable openings and deflectors a current can be created setting the whole body of water in motion in the most efficient way. It must not be overlooked also that, although the converging current in the rectangular tank which has been discussed, is small, that in the circular tank is infinitesimal.

Outdoor Tanks Undesirable.—The situation of the settling tanks out of doors, and often at a considerable distance from the mill, has two serious objections. In the first place, from infrequent visits the distributing boxes are apt to be allowed to fill up partially or almost wholly with muck and trash. In one tank coming under my experience the whole body of the water in the tank was in a whirl. The tank was 24 ft. long by 24 ft. wide and all but a few

DATA SHOWING VARIOUS LAUNDERS, GRADES AND MATERIAL CARRIED

Mill launders	Screening used, holes per square inch	1	2	4	9	16	25	64	100	525	400	625	900	1600		
	Grade of launder, per cent.	20	16	13	11	10	9	8	7		5	4	3-1/2	3		
Battery tables	Grade, per cent.															
	Underflow of tube-mill classifier from 10 to 25 per cent.					..	..	..	11		10			9		
Tube-mill circuit	Shaking amalgamation plates, 10 per cent.															
	Stationary amalgamating plates, 18 per cent.															
	Return from shaking amalgamating plates to pulp elevator, 10 per cent.															
	Percentage of + 60 in final pulp							Under 10		10 to 20		20 to 40		Over 40		
Cyanide plant	Overflow of tube-mill classifier, grade, per cent.							4		4-1/4		4-1/2		5		
	Underflow of slime classifier, sand pulp, grade, per cent.							3		3-1/4		3-1/2		4		
	Overflow of slime classifier, slime pulp, grade, 1-1/4 to 1-1/2 per cent.															
	Overflow of return-sand classifier, grade, 1 to 1-1/4 per cent.															
	Underflow of return-sand classifier, grade, 4 to 5 per cent., depending upon percentage of moisture.															
	Return water launder, grade, 1 per cent.															
	Leaching pipes from sand-treatment plant to precipitating plant, grade, 1 per cent.															

of the circular openings were closed with trash and slime. The discharge opening was a narrow one at the corner farthest away from where the water was entering. At the maximum the velocity of the whirl was 1 in. in 3–3/4 sec. The other great objection to the outdoor situation is that the water in the tanks is often exposed to long periods of zero weather. Barus has shown the effect of temperature on subsidence qualitatively. He introduced equal amounts of tripoli in two tubes containing water. One was maintained at room temperature and the other at the temperature of boiling point. The tubes were 15 cm. long. At the end of 24 hours the tube kept at the higher temperature was clear but the other had only subsided so as to leave a clear portion of but 3 mm. All who have undertaken mill work in tropical or semitropical countries such as Mexico have been impressed at the ease with which slime will settle in the warm water of these latitudes. The importance of warm water in mill work in our northern latitudes has been overlooked entirely.

Launders.—Launders in concentrating mills are made of wood and will need no liners of steel, chilled iron or other substances if below 20 mesh material is being run in them. The minimum permissible grades are shown in the tabulation below which figures apply for the flow of ore and water.[1] For dry launders the slope must be at least 45 deg. The practical and theoretical aspects of launders have been discussed by F. K. Blue,[2] and G. A. Overstrom has performed a multitude of experiments on the carrying power of launders with sand and water and which are described in Richards' "Ore Dressing."

In wet concentration the introduction of water can be delayed until a separation or classifying operation is reached. In jig mills water is commonly first introduced at the head of the trommel line preparing gradings for the jigs.

[1] Tabulation from Eng. and Min. Journ., Feb. 28, 1914 with some figures added.

[2] Eng. and Min. Journ., 1907, p. 536, where there is a mathematical analysis and description of some experiments on launders. See also Professional Paper 86, U. S. Geol. Survey.

CHAPTER XII

MISCELLANEOUS PROCESSES OF SAND AND SLIME CONCENTRATION

Chapter XI completed the description of processes for effecting concentration by methods in which gravity plays a large part. A number of new and improved means have arisen in the last two decades for making separations of gangue from saleable mineral, or the separation of two or more saleable minerals from one another. These means depend upon the attraction for certain kinds of particles for the poles of an electromagnet, repulsion of certain kinds of particles from an electrostatically charged pole, and lastly capillary action of various kinds. The three improved modes of concentration are termed magnetic concentration, electrostatic concentration and flotation. The pull or push of the forces employed in the first two modes of concentration will vary as the square of the distance from the origin of the forces. Consequently, it is necessary for a particle to be relatively small, so that its center of gravity may be brought as close to the source of attraction or repulsion as possible. For the best results, the material treated should be closely graded and brought before the poles in a stream one grain deep, so that as nearly as possible the grains may be equally affected. In the flotation processes the removal of concentrate is effected by increasing its buoyancy by a fluid film for which the metal-bearing particle has an affinity and which causes it to float owing to the decrease in specific gravity of the combined film and grain; the gangue minerals which do not take such a film sink. Unless the concentrate grains are very small, the buoyant action will be too feeble to raise them.

Magnetic and electrostatic separations are seldom applicable as primary separation processes. In practically every case it would be more profitable to make a preliminary concentration even if there be no shipping concentrate made, and the only result obtained being an enriched reduced tonnage of middling. Magnetic and electrostatic concentration find their largest application outside of the field of treating magnetic ores of iron, in a treatment of complex ores containing sulphides of lead, zinc and iron. Unless the lead tenor be very low, the aim of the preliminary work by wet concentration will be to make as large a recovery as possible of the lead, the zinc being obtained, where it is most convenient to do so, in the wet mill. With the bulk of such ores it will be difficult to find any zinky product which will pay to subject to magnetic treatment until tabling has beeen reached, when a blende-quartz-pyrites product low in lead may be removed. In

rare cases a sufficiently lead-free zinc-iron middling may be removed from the zinc, which can be cleaned magnetically or electrostatically, and in exceptional cases lead concentrate may possibly be treated in the same way. The milling of zinky ores magnetically and electrostatically is costly. While the normal price of lead is about 4 cents per pound and zinc 5 cents, the greater cost of milling and smelting zinc ore make the profit from zinc ore much less than from lead ore of the same grade. Neglecting freight, the charges on zinc concentrate would be of the following character: When spelter is 6 cents per pound the smelters will pay $25 per ton for ore containing 47 per cent. zinc plus 75 cents per unit for zinc in excess of 47 units, less 75 cents per unit for zinc below 47 units, with 35 per cent. of the variation in spelter based on a ton of metal. For 5-cent spelter the 47 per cent. concentrate will be worth $18 ($25 minus $20 multplied by 0.35). For 35, 40 and 45 per cent. lead concentrate and lead quoted at $4 per hundred, the value of the lead net would be about 2.6 cents per pound. The table below shows the return from zinc and lead concentrate for 35, 40 and 45 per cent. grade with spelter at 5 cents and lead at 4 cents, and at a glance shows the superior position of lead.

Grade per cent.	Spelter at 5 cents.	Lead at 4 cents.
35	$9.00	$18.20
40	12.75	20.80
45	16.50	23.40

Forty-five per cent. is about as high a grade of zinc concentrate as western mills can make, owing to the impure form of blende in the Cordillerian ores, and it is often difficult to maintain a grade as high as this. It will be seen that with zinc under 6 cents the milling of simple blende-pyrites-quartz ores would be a very hazardous business undertaking. If an ore be milled so as to yield a ton of 45 per cent. zinc concentrate from 3 tons of ore, then the charges for wet milling alone would not be less than $1 per ton of ore milled, if all the ore were reduced to 12 mesh size for beginning the concentration. The wet concentration would give an enriched mass of iron-zinc concentrates amounting to say 1/2 ton for each ton of ore treated, which would have to be roasted at a cost of 50 cents per ton of ore milled. The cost of the ensuing magnetic concentration can be reckoned as an additional 50 cents per ton, making the total cost of the treatment $2. If freight on a concentrate be reckoned at $3 per ton, then the net return would be $4.50 per ton of ore milled, leaving only $2.50 for profit, mining, etc. With such a flow sheet about a 50 per cent. zinc extraction would be obtained and with such an extraction the feed to the mill would have to contain 25 per cent. zinc. Magnetic and electrostatic concentration require that the ore be bone dry before treatment. Nearly all the flotation processes can be worked in water, making them often a valuable adjunct of wet concentration. With bright metallic sulphides, and using this method, there is very

little selective action among the various sulphides, and where there is more than one sulphide of commercial value, flotation process cannot be usually employed, for they will deliver a mixed mass of sulphide which must be subjected to further treatment or separation. Flotation is beginning to achieve notable successes as a primary process for simple sulphide ores of copper, zinc and lead.

Magnetic Separation.—Magnetic separation dates back to 1847 or earlier and up to the advent of the Wetherill separator, the use to which the method was put, was for separating highly magnetic substances such as magnetite and magnetic pyrites. Wetherill's patent (U. S. No. 555792, March 3, 1896) was the first one to show mechanical means for producing a concentrating magnetic field, so that such feebly magnetic material as spathic iron and ferruginous forms of blende could be attracted to the pole pieces.

The following extract from the Report of the Canadian Zinc Commission gives the general features of this process.

"In modern magnetic separators the dropping of the magnetic material is generally effected by mechanically causing it to pass outside of the magnetic field, which may be done in various ways. (1) The magnetic material may be prevented from coming in direct contact with the magnet by means of a traveling belt, or a revolving cylinder of non-magnetic substance, to which the magnetic material will cling as long as in the field, but from which it will drop as soon as removed from the field. (2) The magnetic material may be attracted directly to the pole, which by revolution or change in electrical connection may suffer a change in polarity, or become non-magnetic, thus dropping the attracted particles after removing them from the stream of non-magnetic. (3) The magnetic material may be attracted directly to the pole, and be removed therefrom by means of a brush or scraper.

"Magnetic separators may be classified in many other ways, *e.g.*, those which operate on wet material and those which operate only on dry; those with fixed magnets and those with movable magnets; those which develop high magnetic intensity, and those which develop a low intensity. Different types of machine are suited for different purposes.

"The electromagnet consists essentially of a core of soft wrought iron surrounded by a coil of insulated copper wire, through which electric current is passed. So long as the current flows the iron is a magnet, with north and south poles, and if suspended freely it would align itself with the needle of the compass. By reversing the direction of the current the poles are reversed. The straight electromagnet is an uneconomical form, because of the great dispersion of the lines of force. In order to concentrate the latter the core is bent into U-form and the poles are caused to approach closely together. Further concentration is effected by tapering the pole pieces. The space between the poles, through which the lines of force pass, is called the magnetic field. The intensity of the magnetic field depends upon the size of the magnet, the form of the magnet, and the number of ampere-turns in the coil, *i.e.*, the product of the amperes of current flowing in the coil times the number of turns around the core. The attraction of any magnetic substance varies with the intensity of the magnet and its distance from the magnet.

"Magnetic lines of force are analogous to electric currents, and like the latter from

closed circuits. The magnetomotive force in a magnetic circuit is directly proportional to the number of ampere-turns. The reluctance is directly proportional to the length of the circuit and inversely proportional to the sectional area, and also to the permeability of the substances in the circuit. $\frac{\text{Magnetomotive force}}{\text{reluctance}}$ = magnetic lines of force. By the term permeability is meant a numerical coefficient which expresses how much greater the number of lines generated in a substance by a given magnetomotive force is than those which would be generated in air by the same force. It is not possible to obtain much more than 20,000 magnetic lines per square centimeter in soft, annealed wrought iron, without using enormous magnetomotive force, and in designing electromagnets it is not generally good economy to go above 16,000. Leakage is the number of extra lines which must be produced in order to attain a desired strength of field. This will depend upon the shape of the magnet and the length of the air gap. In a magnet of which the poles are bent around to face each other, with an air gap of only 0.25 in., the leakage may be about 0.3 of the useful lines; for larger air gaps it will be greater; in a poorly designed magnet it may be much greater. Where a very strong field is desired, the lines of force may be condensed by beveling the poles so that their sectional area is less than that of the core, but this is done at some loss of power, inasmuch as halving the area does not by any means double the strength of the field.

"It will be manifest that the intensity of the magnetic field is the greater, the closer the particles to be attracted can be presented to the magnet. The interposition of a belt, or drum, or similar device, which may be necessary to effect the removal of the attracted material from the magnetic field, inevitably reduces to some extent the intensity of the latter.

"Besides the design and arrangement of the magnets, the method of presenting to them the material to be separated is of great importance. This is done usually by distributing the material in a thin sheet by means of a shaking tray, a traveling belt, or by spreading it over a magnetic drum. The rapidity with which it is passed into the magnetic field is a highly important consideration. For example, in testing a mixture of magnetite (strongly magnetic), rhodonite (feebly magnetic), and blende (very feebly magnetic) on a machine of high intensity, it was found that at a certain speed of the belt only the magnetite was attracted. At a reduced speed, the rhodonite was partially attracted. At further reduction the rhodonite was completely attracted and the blende was still uninfluenced. At still further reduction the blende was completely attracted.

"Important principles in magnetic separation are the production of a magnetic current of the minimum intensity and maximum density; the production of a homogeneous magnetic field; passage of the material to be separated through the magnetic field as near as possible to the attracting pole of the magnet, and in an even, regular sheet, at the proper speed."[1]

Magnetic concentrators fall into two classes the low intensity machines operating on a fraction of an ampere and suitable for lifting magnetite, magnetic pyrites, roasted pyrites and roasted siderite and the high intensity machines suitable for lifting minerals of feeble permeability. In zinc

[1] Report of Canadian Zinc Commission, Ottawa, Canada, 1906.

cleaning problems the high intensity machines may require as much as four amperes with 30,000 ampere-turns. There are many magnetic separators, and only three machines will be described, two high-intensity machines, the Wetherill and the International and the Dings low-intensity machine.

Wetherill Magnetic Separators.—The chief features of the Wetherill machine are:

"The production of a very strong magnetic field by concentrating the lines of force which is done by placing the two poles of the magnet as near together as possible by beveling the ends of the pole pieces. This idea was originally employed in several types of machine, known as the Wetherill, all of which have now been replaced by the Rowand-Wetherill (known commonly as the Wetherill). The invention of the Wetherill separator and its success in treating freebly magnetic material certainly gave an impetus to the remarkable development which the art of magnetic separation has received in the last twenty years (U. S. Patent 555792, March 3, 1896). The Wetherill separator commonly in use is described as the 'Crossbelt' form of 'Type E.' The principle of its operation is shown in Fig. 242. The material flows from the

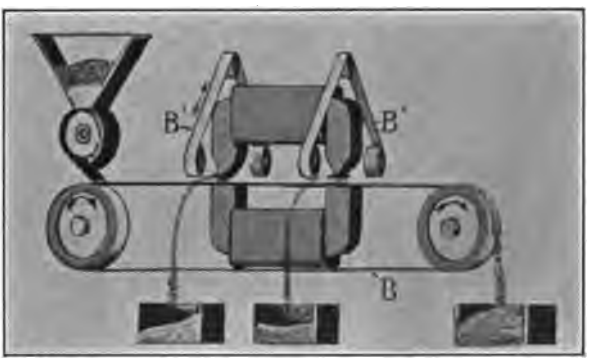

FIG. 242.

holes of the hopper to the feed roller, which discharges it in a uniform layer over the whole width of the conveyor belt *B*, passing between the poles of the magnetic system. The latter consists of two horse-shoe electromagnets, the poles of which are arranged one above the other. The poles of the upper magnet have the shape of a sharp wedge, while the lower ones are flattened. With this arrangement of the magnets the paramagnetic minerals, when brought into the magnetic field are influenced in such a manner that at a comparatively small distance from the lower pole, the magnetic force of the upper poles supersedes that of the lower, this distance being give by the thickness of the conveyor belt, which passes between the poles. The magnetic particles jump toward the upper poles as soon as they are carried by the conveyor belt into the magnetic field. The cross belts *B'* prevent the magnetic particles from adhering to the upper poles and carry them out of the magnetic field. The removal of the magnetic particles is further facilitated by a sharp piece of iron mounted on the front part of the upper poles, by which the intensity of the magnetic field is gradullay increased.

"The capacity of the machine depends upon the thickness of the layer of material

on the conveyor belt and on the speed of this belt, together with the speed of the take-off belts. These factors are regulated according to the nature of the ores."

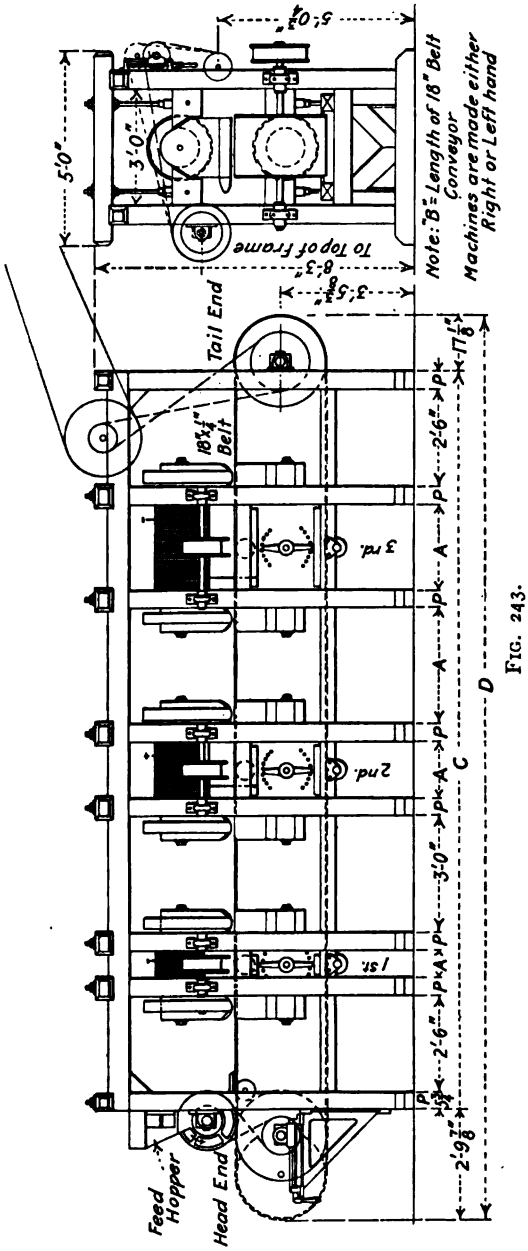

FIG. 243.

Magnet numbers			Dimensions		
1st	2d	3d	B	C	D
			ft. in.	ft. in.	ft. in.
10-20-30	10-20-30	10-20-30	42-7	16-10½	21 1½
10-20-30	10-20-30	40-50	43-4	17-3½	21-6½
10-20-30	10-20-30	60-70	44-1	17-7½	21-10½
10-20-30	10-20-30	80-90	44-10	18-0½	22-3½
10-20-30	10-20-30	100	45-7	18-4½	22-7½
10-20-30	40-50	40-50	44-1	17-7½	21-10½
10-20-30	40-50	60-70	44-10	18-0½	22-3½
10-20-30	40-50	80-90	45-7	18-4½	22-7½
10-20-30	40-50	100	46-4	18-9½	23-0½
10-20-30	60-70	60-70	45-7	18-4½	22-7½
10-20-30	60-70	80-90	46-4	18-9½	23-0½
10-20-30	60-70	100	47-1	19-1½	23-4½
10-20-30	80-90	80-90	47-1	19-1½	23-4½
10-20-30	80-90	100	47-10	19-6½	23-9½
10-20-30	100	100	48-7	19-10½	24-1½
40-50	40-50	40-50	44-10	18-0½	22-3½
40-50	40-50	60-70	45-7	18-4½	22-7½
40-50	40-50	80-90	46-4	18-9½	23-0½
40-50	40-50	100	47-1	19-1½	23-4½
40-50	60-70	60-70	46-4	18-9½	23-0½
40-50	60-70	80-90	47-1	19-1½	23-4½
40-50	60-70	100	47-10	19-6½	23-9½
40-50	80-90	80-90	47-10	19-6½	23-9½
40-50	80-90	100	48-7	19-10½	24-1½
40-50	100	100	49-4	20-3½	24-6½
60-70	60-70	60-70	47-1	19-1½	23-4½
60-70	60-70	80-90	47-10	19-6½	23-9½
60-70	60-70	100	48-7	19-10½	24-1½
60-70	80-90	80-90	48-7	19-10½	24-1½
60-70	80-90	100	49-4	20-3½	24-6½
60-70	100	100	50-1	20-7½	24-10½
80-90	80-90	80-90	49-4	20-3½	24-6½
80-90	80-90	100	50-1	20-7½	24-10½
80-90	100	100	50-10	21-0½	25-3½
100	100	100	51-7	21-4½	25-7½

Dimensions A			
No.	10	Mag.	8½
No.	20	Mag.	8½
No.	30	Mag.	8½
No.	40	Mag.	12½
No.	50	Mag.	12½
No.	60	Mag.	17½
No.	70	Mag.	17½
No.	80	Mag.	21½
No.	90	Mag.	21½
No.	100	Mag.	26½

Fig. 243 and the table accompanying show the dimensions and ampere-turns in thousands for all the sizes of machines manufactured. The

capacity of the machine is from 700 to 1000 lb. per hour and the machine will consume about 7.5 h.p. These figures pertain to zinc-iron separations, the principal use to which the machine is put. Fig. 244 shows a machine with a single pair of poles which is very convenient for test work. The Wetherill machine is excellent for covering the whole field of magnetic separation since it can readily be adjusted to give high or low intensities. The current on the test machine can be raised to a maximum of six amperes.

International Magnetic Separator.—The International separator is manufactured by the International Separator Co. and

"consists of a cylindrical armature made up of thin laminated discs of a special annealed wrought iron mounted upon a steel shaft and revolving horizontally between the pole pieces of a large inverted horse-shoe field-magnet. The discs of the armature are pressed tightly together by heavy cheek plates at each end. The edge of each disc is toothed. In assembling the discs, the teeth are so staggered on adjacent discs that the surface of the finished armature presents a great number of small steel points. The pole pieces are at the extremities of a horizontal diameter of the armature. By induction the magnetism of the pole pieces causes magnetic poles to appear on each side of the surface of the armature. The exciting coils enclose magnet cores which are located just below the pole pieces, there being no direct connection with the armature itself.

"The armature is revolved by a belt and pulley. Material to be separated is fed from the hopper upon the top of the revolving armature, and is carried by its movement around to one side. Here the more attractable particles are held by the magnetic pole and are carried around under the armature. The less attractable material, on reaching the side, slides off. The magnetic pole on one side is a north pole; and on the other, a south pole. There is therefore on the bottom of the armature a place where the polarity changes from north to south. As this place of reversal is approached the magnetic attraction of the armature becomes weaker, until at the point of reversal there is no attraction whatever. Here even the most highly attractable material drops off.

"Long, narrow, adjustable hoppers are supported under the armature by brass stirrups from the shaft bearings. These hoppers can be moved to take different products as desired from the under surface of the armature, as the products successively drop off under the gradually weakening magnetic attraction. In this way several different minerals can be separated in one operation. The position of each hopper is controlled by links mounted on brass shafts extending across the separator. These shafts are provided with indicators for showing the position of the hoppers at any time, and with set screws for locking the hopper in any desired position.

"In a magnetic separator, the heavier the field magnet the less electricity is required to give the armature the required attracting strength. This weight can be put into either the copper wire or into the soft steel field magnet frame; preferably it is put into both. The field magnet of this separator weighs 9000 lb. As it takes a great deal of electricity to make the magnetic lines of force pass through the air, the pole pieces are brought up as close to the armature as possible. Just sufficent room is left to allow the material to be separated to pass between armature and pole piece. The points on the armature prevent the easily attracted material from

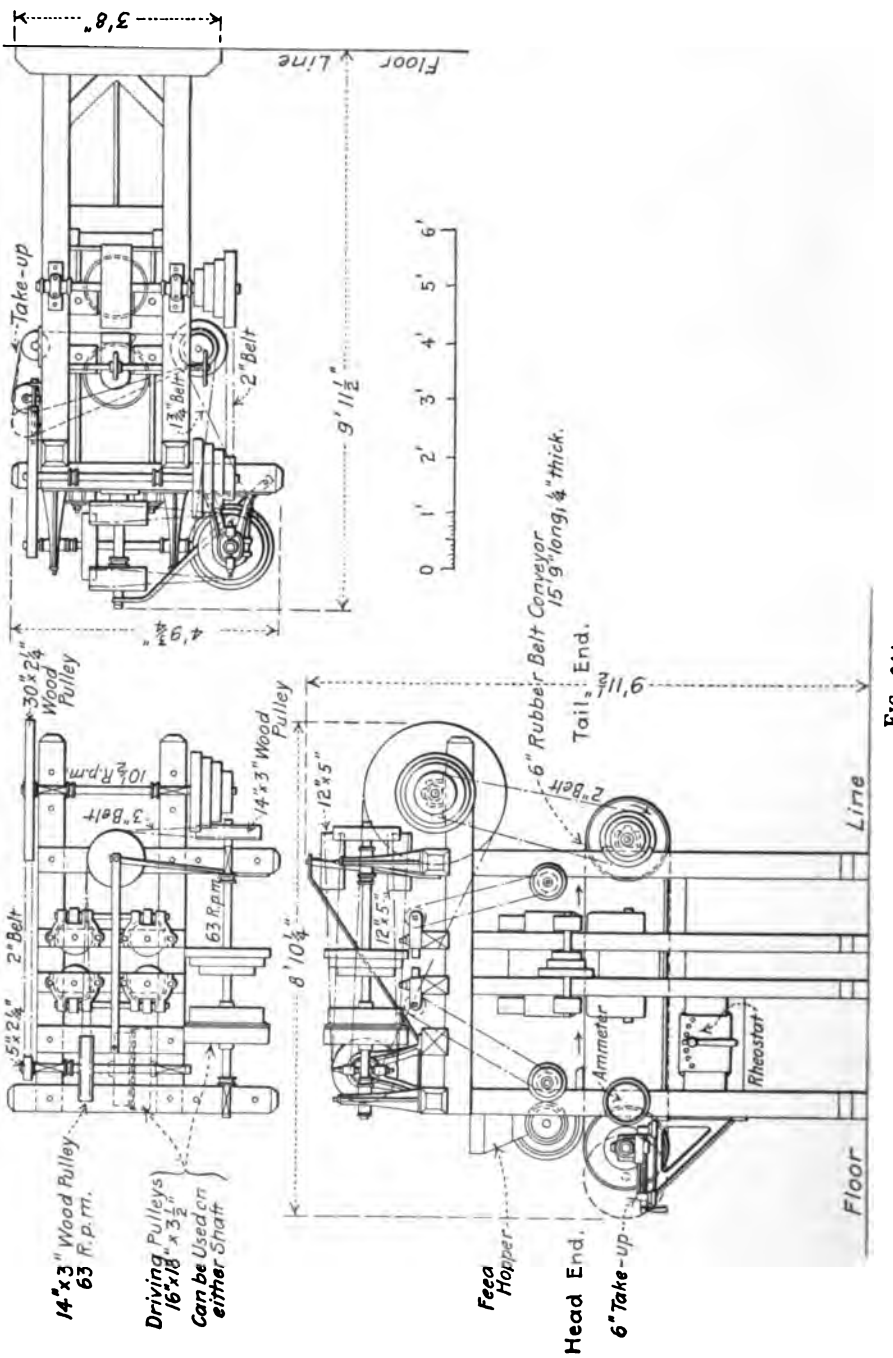
3'8"
Floor Line
Take-up
2" Belt
1¾" Belt
9'11½"
0 1' 2' 3' 4' 5' 6'
4'9½"
30"x2¼" Wood Pulley
10½ R.p.m.
3" Belt
14"x3" Wood Pulley
12"x5"
12"x5"
8'10¼"
6" Rubber Belt Conveyor 15'9" long, ¼" thick.
Tail End.
11'6"
2" Belt
5"x2¼"
63 R.p.m.
2" Belt
Line
Ammeter
Rheostat
Floor
14"x3" Wood Pulley 63 R.p.m.
Driving Pulleys 16"x18" x3½" Can be Used on either Shaft
Feed Hopper
Head End.
6" Take-up

FIG. 244.

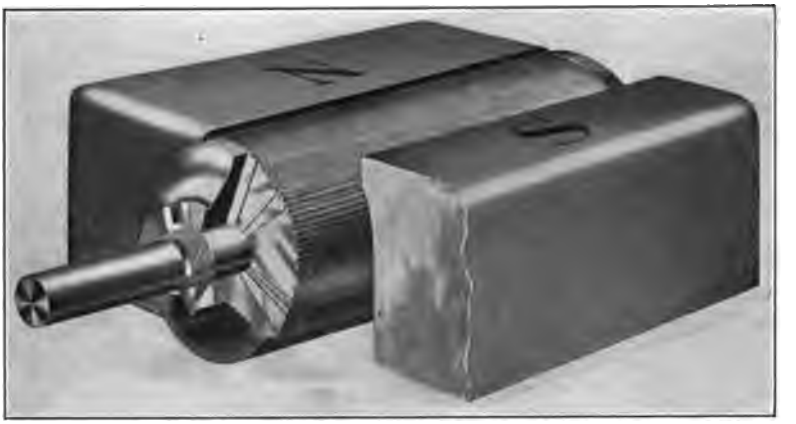

FIG. 245.

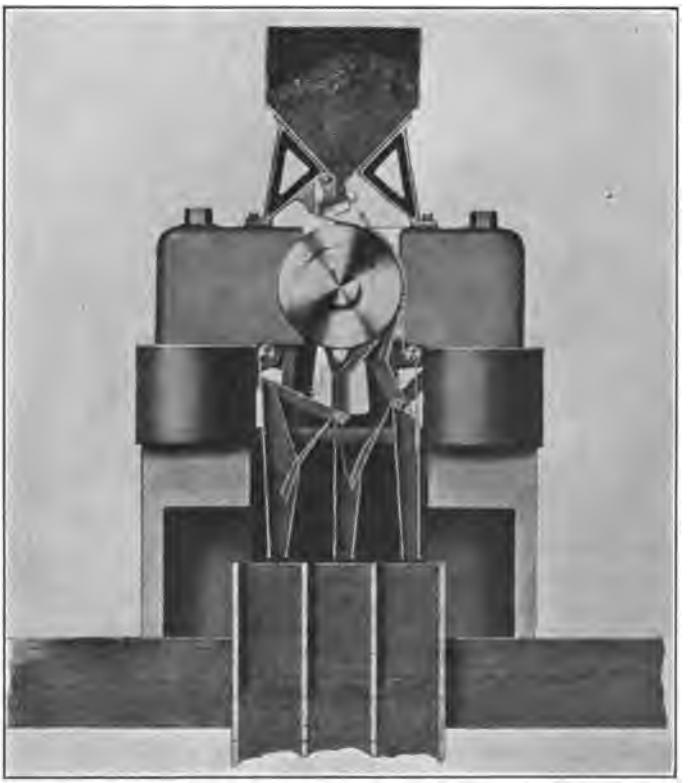

FIG. 246.

sticking to the primary pole piece. The magnetism is much more concentrated on the points than on the face of the pole pieces. An attractable particle, therefore, even when put on the bare steel face of the pole pieces, jumps across to one of the points on the armature. Being able in this way to make the air gap between pole pieces and armature small without having particles accumulate on the pole pieces, only a small current is required to give the armature a high magnetic attractability.

"Any tendency that non-magnetic material may have to adhere to, and to follow the armature, is overcome by the centrifugal force of the armature. By adjusting the speed of rotation this centrifugal force can be given any desired value, and can be balanced against the attractiveness of any one of a series of magnetic

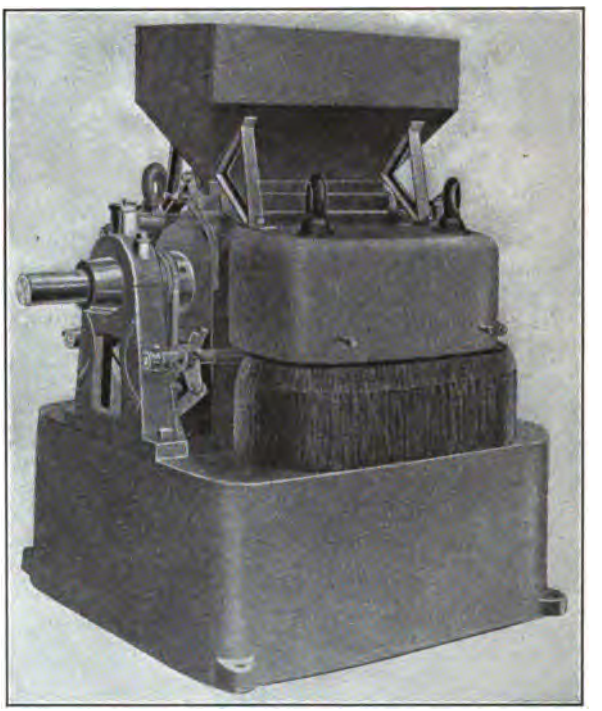

FIG. 247.

material which it is desired to separate. At 135 r.p.m. the centrifugal force is three times the weight of a particle."[1]

The arrangements of the International separator are shown in Figs. 245, 246 and 247. A standard machine weighs 5 tons. It is 3 ft., 2 in. wide by 3 ft., 9 in. long and 5 ft. high. About 2 h.p. are required for each machine. The cost of the machine f.o.b. works is $4000. If but a single pass of the ore is required the capacity of the machine is from 2 to 4 tons per hour. To make the capacity of the machine comparable with the Wetherill, the *capacity* of the machine would have to be reduced to allow of three passes or

[1] *Op. cit.*

the capacity per hour would be from 1300 to 2600 lb. per hour. At the Yak Tunnel mill, Leadville, Colo., 18 International separators treated 250 tons per 24 hours (average of 13.88 tons per machine), an amount but little larger than the maximum given for a standard Wetherill. The 18 machines at this mill required current of 64 amperes at 250 volts or less than 4 amperes to the machine and 1 h.p. for rotating the armature of each machine.

"**Dings Magnetic Separator.**—The Dings separator, made by the Dings Electro-Magnetic Separator Co., of Milwaukee, Wis., is a low-intensity machine of the induction type. The ore is brought to the magnets by means of an inclined shaking tray, which is fed mechanically from a hopper at the upper end. In the standard machine the tray is 16 in. wide. As in all magnetic separators the feed must vary according to the character of the ore. The feed to the tray is regulated by means of a hand wheel on the hopper, and means are also provided for adjustment of the inclination of the tray.

"The primary magnet consists of a core and coil, fixed above the tray, with pole piece projecting toward the tray, the two pole pieces having each a thin edge, shaped into arcs of a circle, the chords of which are about as long as the tray is wide. The secondary magnets form essentially a wheel, which revolves in a plane parallel with that of the tray. The upper side of this wheel has a circle of U-shaped grooves, which embrace the curved edges of the pole pieces of the primary magnet without touching them. In other words, the edges of the pole pieces of the primary magnet are encircled by the grooves of the secondary magnets. On the lower side of the wheel the secondary magnets have the form of a series of cylindrical studs, about 1 in. in diameter, projecting 1 in. or 1–1/2 in. from the wheel. The diameter of the wheel is greater than the width of the tray.

"The primary magnet being energized by the current, sets the wheel of secondary magnets and the shaking tray in motion; the secondary magnets are energized by induction while their U-shaped grooves embrace the pole pieces of the primary magnet, material that is permeable in the magnetic field is attracted by the secondary magnets, and by their revolution is carried beyond the edge of the tray, where it is dropped into a chute, the secondary magnets having passed outside the magnetic field, and consequently being no longer magnetized. In the meanwhile the nonmagnetic material passes down the shaking tray and is discharged over the lower end of the latter. It will be observed that material passing down the tray is twice exposed to magnetic attraction, but with very magnetic mineral by far the largest portion is removed in the first pass."

Fig. 248 shows a machine with two magnets in series, known as the double machine, which gives four magnetic zones.

"The tray is supported on a heavy steel plate, which acts as a magnetic armature with respect to the pole pieces, so that the path of the magnetic lines of force is from pole to pole through the secondary magnets, then through the ore being treated and then through the steel armature under the tray. The tray is supported by roller bearings resting upon the armature or steel plate.

The wheel of the secondary magnets is made of heavy aluminum castings, and the secondary magnets themselves of laminated armature steel. Attention is

given in the design to the reduction to the minimum of the magnetic resistance between the primary and the secondary magnets."

According to the manufacturers the capacity of the single- and double-magnet machine is the same.

"On the basis of crude ore containing 25 per cent. zinc the capacity of the machine is 2000 lb. per hour, but it is not advisable to overcrowd the machine. In a plant roasting 40 tons of ore per 24 hours the installation of two machines is recommended. The machines are sold without royalty."[1]

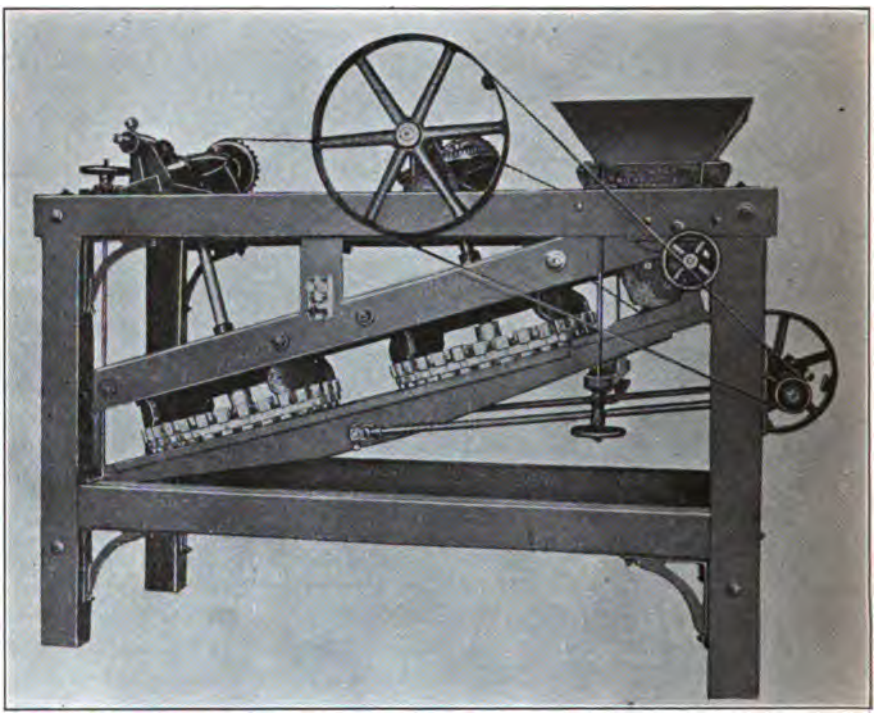

FIG. 248.

DETAILS OF DINGS MACHINES

	Single magnet	Double magnet
Weight net	1400 lb.	3200 lb.
Weight, boxed for shipment	1700 lb.	3600 lb.
Width	36 in.	47 in.
Length	72 in.	120 in.
Height (to top of hopper)	44 in.	66 in.
Mechanical power required	0.5 h.p.	1 h.p.
Electrical power required, maximum	450	1400
Price, f.o.b. works	$600	$1200

Roasting Sulphide Ores for Magnetic Separation.—For pyrites-blende separation the mixed sulphides must have a preliminary roast. In rare

[1] *Op. cit.*

cases the blende is sufficiently ferruginous to be attracted by the pole of magnetic machine of high intensity. Pyrites is preferably roasted to magnetic pyrites.

$$3FeS_2 = Fe_3S_4 + 2S$$

Pyrites may be roasted to magnetic oxide at an even dull red heat but it is difficult to get all the iron into the magnetic form for some ferric oxide will form to reduce which to the magnetic oxide will require the introduction of charcoal at the end of the roast. To convert pyrites to magnetic pyrites requires a cherry red heat (about 1600 deg. Fahr.), the duration of the roast being about 35 minutes. To convert siderite into magnetic oxide will require about the same heat but the duration of the roast is about 20 minutes. Spathic iron ore passes readily to the magnetic form without any intermediate reactions. Freshly roasted magnetic pyrites should be black.

Roasting is usually accomplished in furnaces of the McDougall type. The original patent for this type of furnace was issued to Parkes in 1850, McDougall in 1873 effecting important improvements in cooling the mechanical stirring devices and later Herreshoff and others further improved the details. The furnace can be built on the ground of red and fire brick thoroughly bound together with tie rods and buckstays; the other iron parts being bought from manufacturers, or else a cylindrical Herreshoff furnace may be purchased from the manufacturers suitable for roasting for magnetic products. The circular hearths of these furnaces are 5 to 7 in number, the different shelves communicating with one another through openings which are placed alternately on one side or an opposite one. Through the centers of the shelves rises a pipe in the center of which is secured a solid shaft, the pipe furnishing a passage for air circulation to keep the shaft cool both being driven by gearing placed below or above. A rabble for each shelf is secured to the shaft. It consists of an arm on the lower side of which are mounted a plurality of hoes, inclined to the axis of the arm but parallel to one another. The inclination of the hoes alternate on the different shelves. The hoes spread the ore in a thin sheet on the shelves and push it toward the openings leading from one shelf to the one next below. The ore is fed at the top of the furnace and takes a circuitous course through it, and discharges at the bottom.

The capacity of furnaces of this type for roasting to magnetic products is about 175 lb. per day per square feet of hearth and the consumption of soft coal about 100 lb. per ton of ore. The power required for rotating the shaft and rakes will be less than 3 h.p. Where a comparatively small tonnage of mixed sulphide is made in wet concentration it will be best to have two small furnaces, one furnace being in reserve and each equal to the tonnage of sulphide to be roasted. The wet sulphides can be partly dried and drained in filter bins or draining ponds and fed into the furnace in a damp condition,

the drying being completed by the heat of the furnace. For roasting to a magnetic product the rakes should rotate about 30 times per minute.

Cars may be employed below the furnace to take the roasted ore to a cooling bin above the separators, or a link-belt elevator or conveyor may be used for the same purpose. An alternative way of disposing of the hot ore would be to pass it through cooling conveying devices such as the Baker cooler, Fig. 249, or allow it to discharge on to a double-bottomed water-cooled pan mounted with push conveyors. A cooling pan of this kind 30 ft. long, cooling to 100 deg. C., will have a capacity of 1/2 ton per hour per foot of width. The usual width is about 4 ft. The Baker cooler of 459 sq. ft. surface will cool 2 to 4 tons per hour reducing the temperature to 100 deg. C. The water required for either type will range from 15 to 30 gal. per minute depending upon the reduction in temperature desired. The power required for the Baker cooler will range from 3 to 5 h.p. and for a rake conveyor will be about 5 h.p. for a 4 × 30-ft. pan.

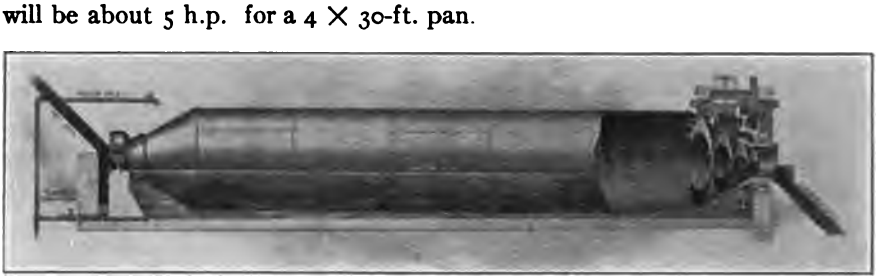

FIG. 249.

Electrostatic Separation.—Electrostatic separation as an art dates back to March 16, 1899, when U. S. patents 668791 and 668792 were granted to Blake and Morscher. The original machines manufactured by these inventors were made entirely of wood except the statically charged rollers which repelled metallic opaque substances with a metallic luster, and attracted gangue materials thus causing the feeding stream of a metallic ore to split into two parts, the repelled portion falling into a receptacle in front of the charged roller, and the attracted substances into a receptacle in the rear of the machine.

The substances which are repelled are called conductors and take a charge like that of the pole while the non-conductors take an opposite charge.

The pole of the Blake-Morscher machine was charged by a static machine which was unsatisfactory for practical operations, it being affected by atmospheric conditions and not giving a steady static discharge.

The Blake-Morscher patents have been consolidated with the Huff patents. The improved machine is shown in Fig. 250. The static electricity is furnished by a 4-h.p. motor generator set, the generator being rated at 300 volts and 5 amperes. The transformer delivers an alternating current to a revolving rectifier or interrupter mounted on the shaft of the gen-

A LIST OF THE COMMON CONDUCTORS AND NON-CONDUCTORS

Conductors	Non-conductors or poor conductors
Native metals	Quartz
Pyrite	Quartzite
Pyrrhotite	Calcite
Chalcopyrite	Limestone
Galena	Porphyries
Garnet	Slates
Molybdenite	Garnet
Chalcocite	Spinel
Argentite	Zinc blende
Tetrahedrite	Zinc carbonate
Tellurides	Barite
Hornblende	Gypsum
Black sand	Granite
	Flurospar
	Monzonite
	Most silicates and gangue rocks

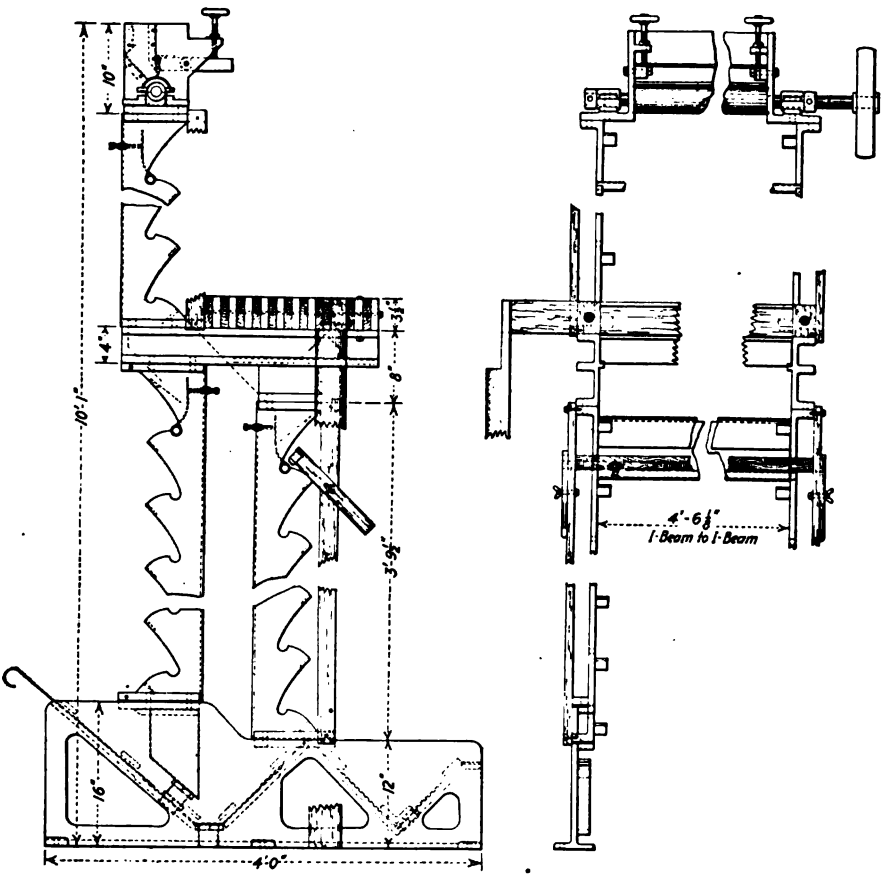

FIG. 250.

erator. By this rectifier either all the crests which are, of course, of like sign or all the troughs also of like sign (of the electrical wave created by the alternating current) are delivered to the separator. It would be possible to use the troughs on one set of machines and the crests on another but the power used in creating an electrostatic charge is so infinitesimal and the electrical machinery of such large capacity that it is only necessary to use one portion of the waves to obtain all the effect desired for any number of separators. The portion of the waves not used returns through the circuit. Control of the voltage for the electrostatic charging is obtained by a resistance box placed between the generator and the transformer. The arrangement of electrical apparatus used, which is the same whether one or many separators are employed, is shown in Fig. 250, in which *a* is the motor, *b* the generator, *d* the interrupter or rectifier and *e* the transformer. The drawings, Fig. 250, show the standard or toboggan machine. The rougher placed

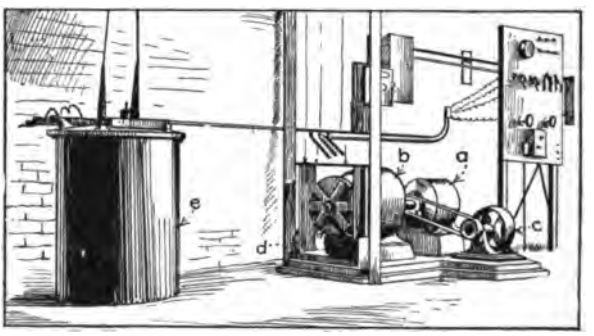

FIG. 251.

above the separating toboggans proper has 6 units and the cleaners or finishers below are also six in number. Material such as resin blende and pyrites is fed to the rougher which repels the iron throwing it down on to the parallel wooden distributing bars shown at the top of the elevation, Fig. 250. The iron then passes down the right-hand series of poles throwing the finished iron into the right-hand hopper, shown at the bottom of the elevation, while the middling goes into the central hopper. The zinc passes down the left-hand tier, the finished blende discharging into the left-hand hopper, and middling joins the iron middling in the center hopper. The middling is returned to the rougher making a closed circuit. The voltage delivered at the separator is between 20,000 and 30,000.

Some minerals which are poor conductors can be made conductors by taking advantage of the fact that the charge is entirely on the surface of the particles. Thus Swartz has succeeded in making resin blende a conductor by treating this substance with a weak solution of copper sulphate which forms a coating of copper sulphide on the grains and makes them conductors.

The chief commercial application of the method is in separating blende

with little or no occluded iron pyrite. The process avoids the roast necessary for separating these substances magnetically. Where the proportion of iron in the blende is too high, the process cannot be applied for blendes of this character are strongly repellant. The process cannot be applied to material coarser than 6 mesh when the capacity of a standard machine may be as high as 35 tons per day of 24 hours. On material ranging in size from 80 to 200 mesh, the capacity under favorable conditions may be as high as 4 tons per day. The machine will not treat the finest dust, because with such material it would have zero capacity or nearly zero capacity, and as such material cannot be fed in a stream one grain deep the conductors and non-conductors interfere with one another in endeavoring to split into two streams.

Flotation Processes.—Flotation has been developed along three general practical lines: (1) The direct floating of powdered dry bright metallic substances on the surface of water, taking advantage of its surface tension and the repulsive effect exerted on these substances by the water skin. The earliest patent embodying this principle was issued to Hezekiah Bradford (U. S. pat. No. 345951, June 22, 1885). Processes using this principle have been developed by MacQuisten, Wood and others. (2) The ore in a powdered condition is mixed with oil in the presence of acid,[1] or the powdered ore is brought into contact with a greased surface. The result of the first operation is to cause bright metallic substances to take a coat of oil while earthy or gangue substances do not. Where the oiling is performed in a suitable vessel the oiled particles rise to the surface of the water and can be removed by suitable means while the earthy and gangue minerals remain behind. The mode of employing flotation by the use of fixed and mineral oils falls into two divisions in one in which the individual particles of metallic substance are coated with a film of oil of sufficient thickness to make the buoyancy sufficient to raise it to the surface of the water. This requires a relatively large amount of oil to secure the desired effect. In the other method, which employs a small percentage of oil, the oil, ore, acid and water being violently stirred or beaten causes a froth of air, gas, oil and concentrate to be formed which readily rises to the surface of the treatment vessel. The mode of employing oil which is mixed with the ore in a way to produce simple coatings is exemplified by the old Elmore process. The agitation froth process is exemplified in the means employed by the Minerals Separation Co. Considering the simplicity of the apparatus used in this process, the low consumption of oil, and the large recovery which is often attained with slime it is by far the most important of all the numerous processes available to the metallurgist. A grease covered surface over which ore and water are caused to flow has been successfully employed in recovering diamonds. Haultain and Stovel employed a greased endless belt. At a trial of this invention at the Mammoth mill in the Coeur d'Alene region, Idaho, the endless belt with a cotton center and wool edges was placed in a highly inclined posi-

[1] In some cases better results are obtained by omitting acid.

tion and fed by a downpouring stream of slime, the belt moving upward against the flow. Mineral coated grease was taken off at the top of the belt and removed to a tank in which water was heated by steam pipes. Here the grease was melted and dropped its load of sulphide, the latter being removed at the bottom of the tank by a slowly revolving worm. The melted grease flowed off the surface of the water and after being congealed was smeared on the lower portion of the belt. It may be possible to apply these details to a canvas covered convex round table. (4) Ores containing carbonates or to which a small percentage of carbonates is added on being treated with acid furnish sufficient carbonic acid gas to selectively coat metallic grains. This gas has no affinity for earthy or gangue particles. When the metallic particles are coated with the gas they rise to the top of the treatment tank. This is the principle employed in the Potter-Delprat process. Out of the work of these inventors grew the first successful commercial applications of flotation.

A complete exposition of the principles underlying the separation processes which are grouped under the general head of flotation has not as yet appeared in the technical or scientific press. No doubt with commercial advances in the art important discoveries will be made especially in the field of selective flotation. As the art stands today there is little or no difference in the floating power of different metallic sulphides, but when the exact mode in which the actions take place is exactly understood it will be possible to vary conditions so as to recover the sulphides of commercial value separately.

Owing to the unsatisfactory condition of the theory of flotation processes it can only be stated at present that it is due to feeble attractions and repulsions being due to like conditions of potential, while unlike conditions of potential produce attraction. A familiar experiment is to take two clean surfaces of quartz and galena and let fall on each a drop of water. In the case of the quartz the drop at once spreads out in a thin film while on the galena surface it stands as a flattened globule. In the first case there is attraction and in the second repulsion. Whether air takes part in this action or not I do not know, but there seems to be some evidence that the galena grain has interposed between it and the water a film of air. If the galena be of plus potential then the air adhering to it would be of minus potential and the water of plus potential tending to repulse the air film. If the quartz surface be of minus potential then it would have adhering to it no air film of minus potential for it would repulse it, and since the water is of plus potential it would be drawn to the quartz and spread over its surface. Some facts seem to confirm these observations. Where grains of sulphide float on water it is impossible to conceive of their being in direct contact with this medium, it is more satisfactory to the mind to conceive of an adhering film or air interposing between the metallic grain and the water. The "dry spots" which occur on the linoleum surface indicate the possibility that finely divided grains of sulphides retain a film of air even when submerged in water. These

dry spots are due to high places in the linoleum where the film of wash water becomes so thin that it is driven away by the repulsion of the linseed-oil bond of the linoleum, leaving a more or less dry circular area. Around the edges of these spots sulphides appear in a *perfectly dry condition* and float away on the surface of the water film. Where oil or cabonic acid gas adheres to metallic grains, they may be conceived as having a greater attraction for these grains than does the air and to drive away and replace the air film, oil air and carbonic acid gas having a minus polarity. Acid seems to render the oil more miscible without causing it to lose any of its affinity for metallic substances.

Commercial applications of the various processes will be found described at length in "Concentrating Ores by Flotation" by Theodore W. Hoover. The Potter-Delprat and DeBavay processes will scarcely find application in American ore-dressing problems. The apparatus used consists of a few simple tanks and auxiliary apparatus. If the Potter-Delprat process is employed on ores which do not contain any carbonates 2 to 3 per cent. carbonate material must be mixed with the ore to furnish the needful carbonic acid gas.

Elmore Process.—The processes which are more apt to be applicable to American ore dressing problems are acid oiling by gentle agitation of the ore with water, acid and oil, the improved Elmore process and agitation-froth processes, credit for working out the details of which must be given to the engineers of the Minerals Separation Co. If the Elmore process is to be tried it will be best to submit a test sample to this company for determining its efficiency with the individual ore. The Elmore apparatus is shown in Fig. 252.

"The pulp from the crushing mill flows continuously into the mixer *A*, into which is also introduced small quantities of oil and, if required, of acid also, at the point *B*. The required agitation is brought about by the rotation of the beaters *C*. The agitated pulp flows continuously from the mixer into the funnel *D*. The concentrate discharge pipe *E*, and the tailings discharge-pipe *F* are both sealed with water in the tanks *G* and *H*, respectively."

The upper part of the feed pipe *D* enters the center of the conical separating vessel *I*. Upon the application of a vacuum through pipe *J*, the pulp from the mixer is caused to ascend the feed-pipe and fill the conical chamber *I*. The rate of flow of the pulp down the pipe *F* being slightly less than the inflow up the feed pipe *D*, a small amount of the liquid overflows the lip of the annular space *K*, this quantity of liquid being sufficient to carry the concentrate down the pipe *E* into the tank *G*. The rakes *L* are caused to rotate slowly by means of the worm and wheel *M*, the angle of the rake blades being such as to cause the solid matter in the pulp to travel from the center to the periphery of the conical chamber, whence the tailings discharge continuously down the pipe *F*. The feed pipe *D* is usually about 25 to 30 ft. long; the

tailings and concentrate pipe E and F being a few feet longer, so that in effect the feed pipe and tailings pipe form the long and the short leg of a siphon; thus the power required to elevate the pulp into the conical chamber is supplied by the falling column of pulp in the tailings pipe. So long as a continuous flow of pulp is supplied to the mixer, a continuous and entirely automatic discharge of tailings and concentrate is secured. The annular space K is

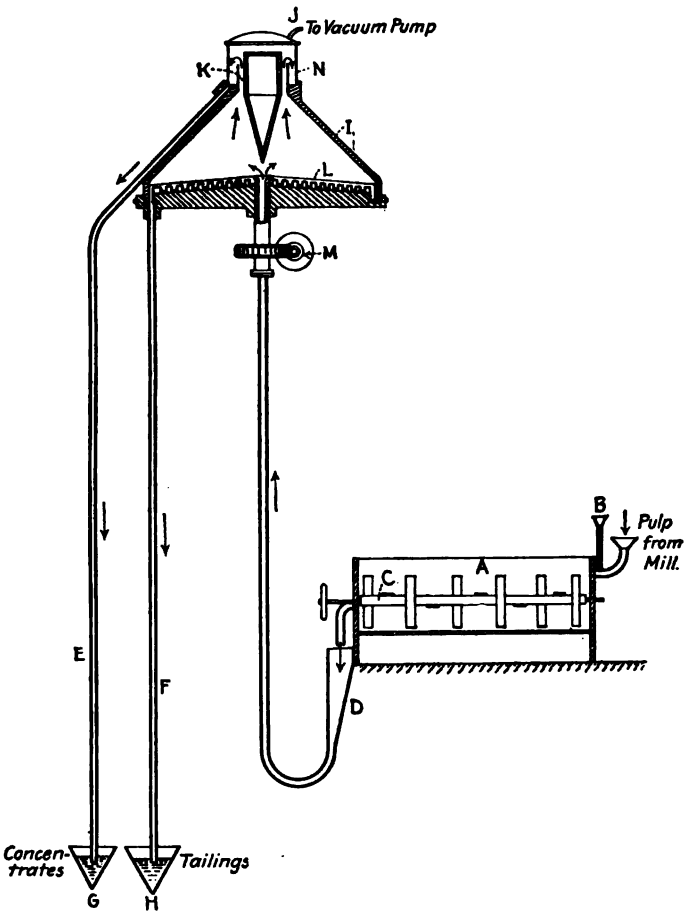

FIG. 252.

surrounded by a thick glass cylinder, or by a metal cylinder with one or more thick glass windows, through which the discharge of the concentrate over the lip of the annular ring may be observed. The power required for a 5-ft. unit of plant does not exceed 2-1/2 h.p., including that required for driving the vacuum pump, mixer, and separator. One complete unit costs about $2500 and will have a capacity of 35 to 45 tons per 24 hours. The amount of oil and acid required varies from 3 to 10 lb. per ton of ore

treated. A large variety of oils have been found suited to the process, viz., all kinds of crude petroleum and residuum, tars, blast-furnace oils, olive oil, residues, oleic acid, kerosene and a number of light oils and fish oils. Tests of the availability of the Elmore process to any particular ore can be made with closed chemical glassware which after gentle agitation can be connected to any device for producing a vacuum.

The agitation-froth processes are more apt to yield favorable results than the others. A qualitative experiment followed by weighing and assaying of the froth produced will quickly show whether this process is applicable to any particular ore. To perform this experiment. Take about 1/2 lb. of ore crushed to 60 mesh, or an equal weight of dry slime from the wet concentrating mill and mix with three parts by weight of water; to this add 1 per cent. (based on weight of the ore) of sulphuric acid and 1/10 per cent. by

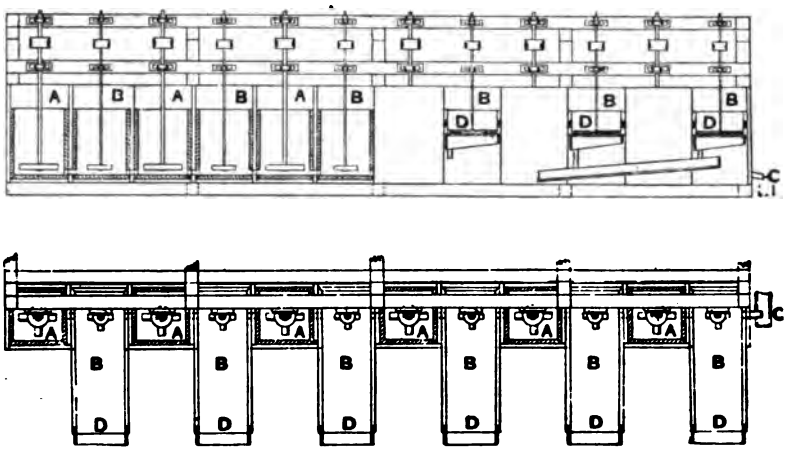

FIG. 253

weight of engine oil of medium specific gravity. Heat to 75 deg. C. and place all in a stout glass vessel of suitable size and beat the charge vigorously for 1/4 to 1 minute with a Dover egg beater. If a thick scum forms experiments of a quantitative character may be performed. These will consist of determining the best quantity and kind of oil and the per cent. of acid. The effect time of agitation, the best number of revolutions of the stirring apparatus, the effect of temperature, the mesh to which the ore is to be crushed if the flotation process be used as a primary process, the amount of regrinding if any if the process be used as an adjunct of wet concentration. If the process is to be applied to all the sand and slime tailing which is discharged from these departments of a wet mill, tests should be conducted to determine whether or no certain of the coarse sand sizes cannot profitably be eliminated before submitting the balance of the sand and slime tailing to flotation. In making these tests it will be found more profitable to at once

employ a standard device as shown in Figs. 253 and 254[1] and perform tests on a working scale.

Agitation-froth methods are not always applicable to simple ore. In one case which has come within my experience the ore contained a large quantity of specular iron which was carried up with the blende almost as freely as the latter. In this case simple oiling was found to be effective. All kinds of oil are available for flotation processes some form of mineral oil being most commonly used. So-called soluble oils though expensive find favor since they do not gum the concentrate and may be submitted to tabling

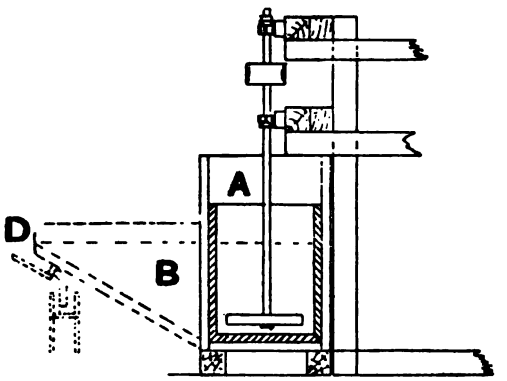

FIG. 254.

without any difficulties arising. The oil of the eucalyptus is the one of this kind most commonly used.

The scope of flotation process is at present confined largely to simple ores such as those of copper, zinc and lead, one of these elements being present to the exclusion of others or other elements being present in negligible amount. Where the ore to be treated has already been crushed or milled, the process being used as an adjunct of wet concentration the cost of the process is stated by Hoover to be 75 cents to 80 cents per ton. He expresses the opinion that under good management the costs will in the future be reduced to 50 cents per ton.

[1] From Hoover's "Concentrating Ores by Flotation," to which reference should be made for dimensions, capacities, etc.

INDEX

A

Aikens classifier, 352
Air lift, 261
Akron Chilian mill, 339
Allis-Chalmers roll, 225
Allis roll, 223
American Concentrator Co. jig plunger, 314
Anaconda classifier, 354
Anaconda convex round tables, 393
Anaconda unit flow sheet, 161
Arcall, Phillip H. quoted on rolls, 201 *et seq.*

B

Baker cooler, 412
Ball mills, 230
Baron concentrator, 360
Bearing power of soils, 53
Bearings,
  Plain, dimensions and weights, 144
  Ring oiling, dimensions and weights, 279
Belting
  Horse power transmitted by rubber, 147
  Weight of rubber, 255
  Weight and prices of rubber conveying, 84
Belt shifters, 156
Bins
  Accessories, 76
  Design of wooden, 61
  Dimensions for, 62
  Concentrate, 394
  Gates for, 77
  Mode of discharge of ore from, 73
  Modes of distributing ore in, 88
  Steel, 72
  Variations of pressure emptying and filling, 69
  Variations of size of ore in, 88
Blake and Morscher electrostatic patents, 412
Blake breaker or crusher
  Angle of nip, 178
Blake breaker or crusher
  Capacity, 179
  Feeding, 181
  Historical, 173
  Plates for, 183
  Power required, 180
  Springs for, 185
  Rebabitting, 183
  Theory of, 173
Bradford, flotation process, 415
Breakers, see Crushers.
Brunton sampler, old style, 115
Bunker Hill & Sullivan M. & C. Co., 12, 34
  Section of mill and flow sheet, 160
Boulder County, Colo., 12

C

Caetani, 36
Callow screen, 296
Callow tank, 385
Camp Bird mill, destruction of, 51
Canda crusher plates, 184
Card concentrator, 369
Centrifugal pumps for raising ore and water, 261
Chalmers & Williams' roll, 227
Chicago, foundations, 54
Chilian mills, 335
Chrome steel works, weights of slamp parts, 336
Classifiers
  Free settling, 326
  Hindered settling, 353
  Sand and slime separators, 351
Clifton-Morenci district, 45
Closed circuit
  Evils of, 132, 203, 271, 323
  Defined, 203
Clutches, 147
  Danger of, 148
Coeur d'Alenes
  Change of ores with depth, 10
  Grade of concentrate, 17
  Jigging at Wardner, 321

Coeur d'Alenes
Silver losses in ores of, 7
Snowslides, 48
Concentrate cart, 394
Concentrate, proper grade of, 35
Concentration, limit of, 31
Concentrators, see also Card, Deister and Wilfley Concentrators.
Installation of, 380
Power required, 379
Stroke of, 379
Theory of, 365
Wash water required, 381
Conveyers, 79
Drag, merits of, 87
Capacity of flat and troughed belts, 80
Idlers, arrangement of, 81
Maximum slope, 81
Pulleys, 81
Troughed belts
Capacity of, 86
Power required, 87
Weight of rubber belts for, 84
Copper King mine, 10
Copper ores
Changes with depth of sulphide, 9
Lake Superior mill practices, 30
Quartz gangue possibility of eliminating tailing in jigging, 9
Tests for flow sheet of, 28
Coronado mine, 10
Cost of mills, 14
Couplings, shaft, sizes and weights of, 142
Cripple Creek, sorting practice, 99
Crushers, 173
Blake, 173
Choice between Blake and gyratory, 194
Dodge, 199
Gates, 188
Gyratory, 188
Sturtevant, 200
Symons disc, 200
Crushing
General dissertation upon, 163
Efficiency of impact and positive crushers, 169
Ratio of, 171
Crushing Plant, 57
General arrangement of, 58
Separation of, from mill proper, 57
Support of machinery, 58
Custer mine, snowslide at, 50
Custom mills, depreciation of, 16

D

Dèbris, law of, 44
Deister concentrator, 369
Deister machine works slime concentrator, 394
Deister slime concentrator, 387
Denver Engineering Works' rolls, 223
Depreciation of mills, 14, 16
Dings' magnetic separator, 409
Dodge crusher, 199
Dolcoath mine, 11
Dorr classifier, 352
Dorr thickener, 385
Drei Prinzen Veir, 8
Dust collection and abatement, 122
Atomizers, 123
Collectors, 128
Exhausters
Power required for, 128
Sizes and weights, 130
Friction of air in pipes, 126
Weights of galvanized iron pipe, 125
Dumps, concentration of, 32

E

Egger's Huntington mill muller, 344
Elbows, friction of water in, 154
Electrostatic separation, 412
Elevators, 232
Belts
Equipping and raising, 246
Weight and prices of, 255
Boots, 243
Buckets, 248
Gearing, 249, 256
Hoods and Receivers, 241
Housings, 232, 235
Modes of feeding, 237
Power required, 256
Pulleys and shafts, 242
Speed, 243
Elmore flotation process, 417
Evans-Waddell Chilian mill, 335

F

Fans and exhausters, power required, 128
Federal-Esperanza classifier, 352
Feeders
Bin, 90
Roll, 215

Floors, mill, slope of, 137
Flotation processes, 415
Flow sheets
  Anaconda unit, 161
  Bunker Hill & Sullivan M. & C. Co., 160
  Determination of from test, 28
  Federal Lead Co., 159
  Silver Lake Mill, 159
  United States S. R. & M. Co., 158
Foundations, 52
  Bearing power of soils, 53
  Footings, 54
  Importance of filling around footings. 54

G

Gates crusher, 188
Gangue, influence of on milling, 9
Gold Prince mill, bin distributing device, 90
Grading and grading devices, see creens, Classifiers, Trommels, Screenless Sizer.
Grizzlies
  Shaking, 291
    Coxe bars, 291
    Necessity for balancing, 289
    Theory of balancing, 289
  Stationary
    Typical wear of bars, 99
    Weight of standard bars, 98
Gyratory crusher
  Advantages of, 191
  Disadvantages of, 192
  Lubrication of, 199
  McCully crusher, capacity power and weight, 189
  Repairs, 198

H

Hancock jig, 40, 328
Hardinge tube mill, 347
Haultain and Stovel, concentration by grease, 415
Haultain, pulp-reducing device, 120
Haverstraw freestone, compression tests on 166
Heberli mill, 339
Hill clutch, 149
Humphrey roll, 227

I

Independence mill, bin feeder, 90
International magnetic separator, 405
Iron ores, mode of milling, 30
Isbel vanner, 381

J

Jamieson, J. A. Experiments on bin pressure, 69
Jigs and jigging, Chap. X.
  Air jigs, 331
  Free settling factors, 307
  Hand jig, 327
  Hancock jig, 328
  Harz jigs, 302
    Capacity, 316
    Historical, 309
    No. of strokes for, 326
    Power required, 327
    Stroke for, 326
    Water used, 327
  Hindered settling factors, 308
  Movable screen jigs, 327
  Plumb jig, 332
  Richards plusator jig, 327
  Theory of jigging, 302
  Woodbury jigging system, 331
Joplin, Mo., 12

K

Kick's law, 167

L

Lake Superior, copper mill practice, 30
Launders, slope of, 398
Liberty Bell mine, 52
Log washer, 30

M

Macquinsten flotation process, 415
Magnetic separation, 401
  Dings' magnetic separator, 409
  International separator, 405
  Wetherill separator, 401
  Roasting and roasting furnaces, 410
    Cooling devices, 412
McCully breaker or crusher, 188

McKesson-Rice screenless sizer, 297
Mills
  Construction, wooden, 135
  Depreciation, 14, 16
  Foundations for, 52
  General arrangement of, 131
  General considerations affecting size and period of erection, 3
  Grading of site for, 52
  Location, 42
    Disposal of tailings, influence on, 44
    Flat vs. sloping sites, 47
    Influence of snowslide on, 43
  Salvage, 16
  Stairways, 61
  Wooden vs. steel frames, 134
Mine and Smelter Supply Co., rolls, 227
Mines, modes of development, 2
Minerals Separation Co., flotation process, 415
Minnesota, iron ore mills, 30
Monte Cristo district, ore deposition, 10
Motive power, choice of, 137
Motors, electric, 138

N

Nissen stamp, 333

O

Ore
  Differences in mode of deposition, 8
  Influence of depth in milling, 9
  Reserves for milling, 3
  Testing, see Testing.
Overstrom classifier, 356

P

Pan feeder, 90
Park City, Utah, 17, 18
Picking, ore, see Sorting.
Pipe
  Dimensions, etc., of wrought iron, 155
  Weight of galvanized, 125
Plumb jig, 332
Plunger feeder, 90
Pollution of streams, law of, 45
Potter-Delprat flotation process, 416
Power & Mining Machinery Co. roll speed diagram, 210

R

Ratio of concentration, 5
Retaining walls, 55
Revolving screens, see Trommels.
Richards, Robert H.
  Centrifugal forces in trommels, 268
  Hindered settling factors, 308
Richards-Coggins, free settling classifier, 326
Richards hindered settling classifier, 357
Richards-Janney classifier, 355
Richards pulsator classifier, 356
Rittinger
  Crushing law, 165
  Free settling factors, 307
  Concentrator, 359
Roasting for magnetic separation, 410
Rolls
  Angle of nip, 207
  Capacity, 202
  Closed circuit, 203
  Details of construction, 219
  Feeding, 215
  Historical, 201
  Lubrication, 215
  Power required, 209
  Pressure in bearings, 213
  Speed, 209

S

Salvage of mills, 16
Sampling, 109
  Hand sampling, 109
  Haultain reducing device for pulp, 120
  Machine sampling
    Errors in design, 114
    Mixers, 116
    Vezin sampler, 118
  Mine for mill test, 19
Sand pumps, 258
Sand wheels, 259
Sanderson vs. Pennsylvania Coal Co., 45
San Juan region, snowslides in, 48
Saving, formula for, 22
Screens and screening, see also Trommels, 263
  Callow screen, 296
  Flat screens, 288
    Theory of balancing, 289
  Impact screen, 294
  Newaygo screen, 297

Screens and screening
Perfect screen, 297
Grizzlies
Shaking grizzlies, 291
Stationery grizzlies, 93
Trommels, 268
Screenless sizer, 297
Shafting
Bearings, plain, 144
Collars, 143
Couplings, 142
Horse power transmitted by, 141
Keyseats, sizes of, 140
Weights of, 139
Shannon Copper Co., impounding of tailings, 46
Silver Lake mill, flow sheet, 159
Slime tables, 387, 391
Slime treatment, 387
Definition of slime, 389
Deister slime concentrator, 387
Deister Machine Works slime concentrator, 394
Canvas plants, 391
Theory of film sizing, 389
Wilfley slime concentrator, 394
Sorting, 99
Advantages of, 99
Cost of, 107
Means of spraying or washing ore, 104
Requirements for, 104
Testing for, 19
Theory of, 100
Specific gravity of common minerals, 309
Spouts, 123
Stairways, 61
Stamps and stamp mills, 333
Nissen stamp, 333
Weights of stamp parts, 336
Stiles concentrator, 361
Sturtevant crusher, 200
Success mine, change of ore with depth, 11
Sturtevant roll bearing, 217
Symons crusher, 200

T

Tailings
Defined, 28
Dump treatment of, by concentration, 32
Impounding of, 46
Tank
Callow, 385
Dorr thickener, 385
Theory of, 394
Testing ores, 17
Advantages of test plant at mine, 37
Determining saving in operating mill, 40
Classification of concentrating ore by degree of unlocking necessary, 17
Copper ores, quartz, 28
Zinc ores, complex, 34
Tramways, cost of transportation by, 43
Transmission machinery, see Bearings, Collars, Couplings, Shafting, etc.
Trommels, 268
Capacity of, 271
Details of, 271
Housings, 283
Power required, 288
Proper slope, 270
Speed, 271
Water required, 288
Tube mills, 345
Cylindrical
Capacity, 348
Charge of pebbles, 347
Power required, 351
Speed, 351
Hardinge, 348
Tungsten, 12

U

United States S. R. & M. Co., flow sheet, 158
Utah Copper Co., 12

V

Vanners, 361
Capacity, 387
Isbel, 381
Mode of testing, 386
Power required, 387
Water required, 387
Vezin sampler, 118

W

Water
Calculation of head in piping system, 156
Preemption of, in western states, 44
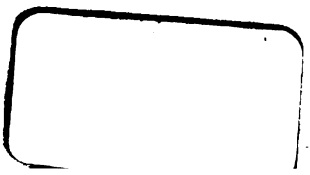
Wellman-Seaver-Morgan, clutches, 151
Wetherill magnetic separator, 403
Wilfley concentrator, 359
Wilfley slime concentrator, 394
Williams-Janney variable speed transmission, 182
Wood flotation process, 415
Woodbury jigging system, 331